SUZUKI

DR650SE

SERVICE MANUAL

FOREWORD

This manual contains an introductory description on SUZUKI DR650SE and procedures for its inspection/service and overhaul of its main components.
Other information considered as generally known is not included.
Read GENERAL INFORMATION section to familiarize yourself with outline of the vehicle and MAINTENANCE and other sections to use as a guide for proper inspection and service.
This manual will help you know the vehicle better so that you can assure your customers of your optimum and quick service.

- *This manual has been prepared on the basis of the latest specification at the time of publication.*
  If modification has been made since then, difference may exist between the content of this manual and the actual vehicle.
- *Illustrations in this manual are used to show the basic principles of operation and work procedures.*
  They may not represent the actual vehicle exactly in detail.
- *This manual is intended for those who have enough knowledge and skills for servicing SUZUKI vehicles. Without such knowledge and skills, you should not attempt servicing by relying on this manual only.*
  Instead, please contact your nearby authorized SUZUKI motorcycle dealer.

IMPORTANT

All street-legal Suzuki motorcycles with engine displacement of 50cc or greater are subject to Environmental Protection agency emission regulations. These regulations set specific standards for exhaust emission output levels as well as particular servicing requirements. This manual includes specific information required to properly inspect and service DR650SE in accordance with all EPA regulations. It is strongly recommended that the chapter on Emission Control, Periodic Servicing and Carburetion be thoroughly reviewed before any type of service work is performed.

Further information concerning the EPA emission regulations and U.S. Suzuki's emission control program can be found in the U.S. SUZUKI EMISSION CONTROL PROGRAM MANUAL/SERVICE BULLETIN.

GROUP INDEX

GENERAL INFORMATION	1
PERIODIC MAINTENANCE	2
ENGINE	3
FUEL AND LUBRICATION SYSTEM	4
CHASSIS	5
ELECTRICAL SYSTEM	6
SERVICING INFORMATION	7
EMISSION CONTROL INFORMATION	8
DR650SEV/W/X/Y ('97/'98/'99/'00-MODEL)	9
DR650SEK1 ('01-MODEL)	10

SUZUKI MOTOR CORPORATION
Motorcycle Service Department

HOW TO USE THIS MANUAL

TO LOCATE WHAT YOU ARE LOOKING FOR:

1. The text of this manual is divided into sections.
2. As the title of these sections are listed on the previous page as GROUP INDEX, select the section where what you are looking for belong.
3. Holding the manual as shown at the right will allow you to find the first page of the section easily.
4. On the first page of each section, its contents are listed. Find the item and page you need.

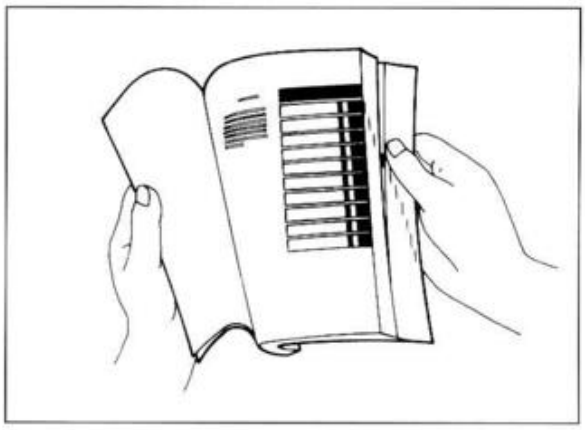

COMPONENT PARTS AND WORK TO BE DONE

Under the name of each system or unit, its exploded view is provided with work instruction and other service information such as the tightening torque, lubricating points and locking agent points.

Example: Front wheel

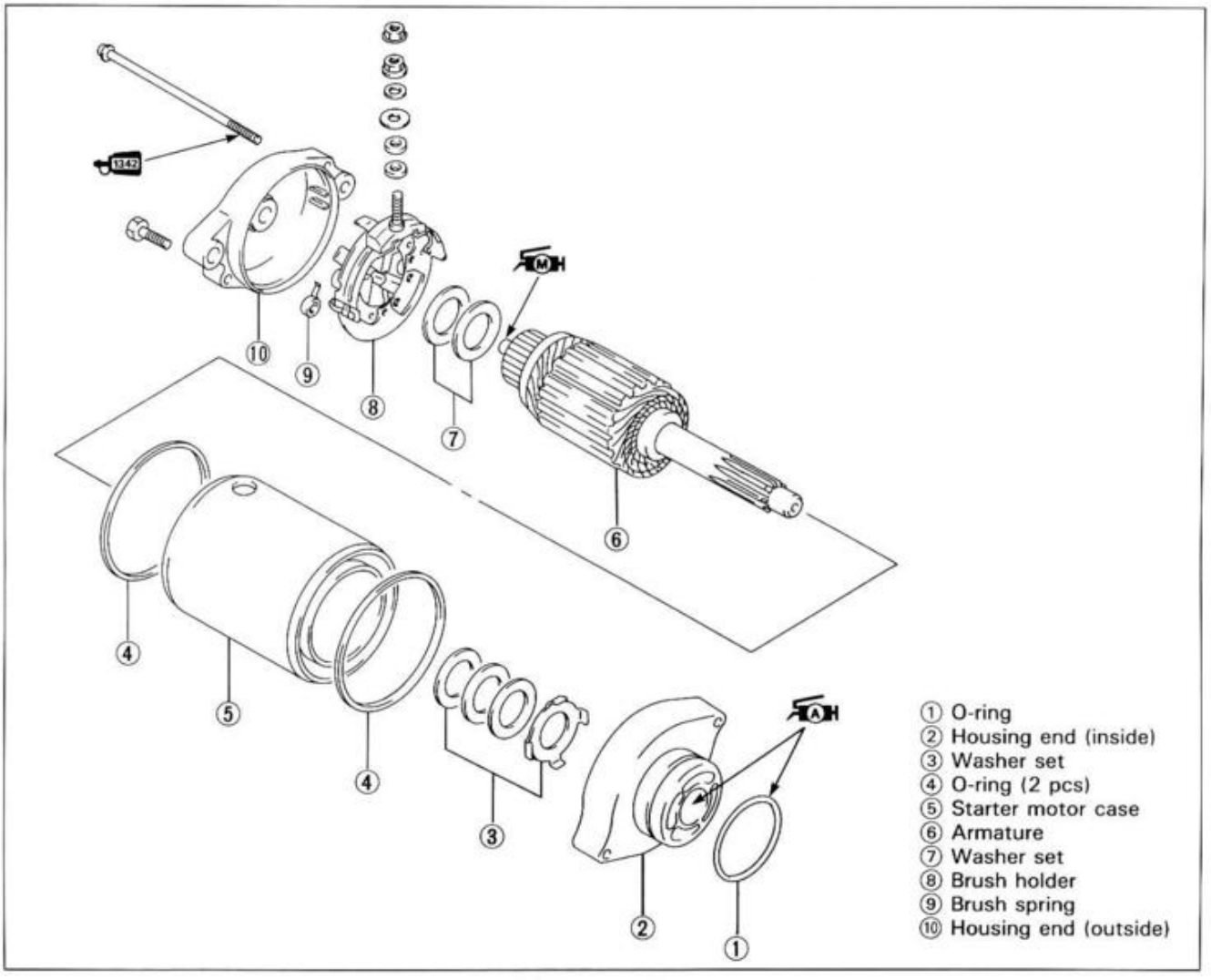

SYMBOL

Listed in the table below are the symbols indicating instructions and other information necessary for servicing and meaning associated with them respectively.

SYMBOL	DEFINITION	SYMBOL	DEFINITION
	Torque control required. Data beside it indicates specified torque.		Apply THREAD LOCK SUPER "1303". (99000-32030)
	Apply oil. Use engine oil unless otherwise specified.		Use fork oil. (99000-99044-10G)
	Apply SUZUKI SUPER GREASE "A". (99000-25030)		Apply or use brake fluid.
	Apply SUZUKI SILICONE GREASE. (99000-25100)		Measure in voltage range.
	Apply SUZUKI MOLY PASTE. (99000-25140)		Measure in resistance range.
	Apply SUZUKI BOND "1207B". (99104-31140)		Measure in current range.
	Apply THREAD LOCK "1342". (99000-32050)		Use special tool.
	Apply THREAD LOCK SUPER "1360". (99000-32130)		

GENERAL INFORMATION

1

CONTENTS

WARNING/CAUTION/NOTE 1- 1
GENERAL PRECAUTIONS 1- 1
SUZUKI DR650SET ('96-MODEL) 1- 3
SERIAL NUMBER LOCATION 1- 3
FUEL AND OIL RECOMMENDATION 1- 3
FUEL 1- 3
ENGINE OIL 1- 4
BRAKE FLUID 1- 4
FRONT FORK OIL 1- 4
BREAK-IN PROCEDURES 1- 4
INFORMATION LABELS 1- 5
SPECIFICATIONS 1- 7
COUNTRY OR AREA 1- 9

WARNING/CAUTION/NOTE

Please read this manual and follow its instructions carefully. To emphasize special information, the symbol and the words WARNING, CAUTION and NOTE have special meanings. Pay special attention to the messages highlighted by these signal words.

⚠ WARNING

Indicates a potential hazard that could result in death or injury.

⚠ CAUTION

Indicates a potential hazard that could result in vehicle damage.

NOTE:
Indicates special information to make maintenance easier or instructions clearer.

Please note, however, that the warnings and cautions contained in this manual cannot possibly cover all potential hazards relating to the servicing, or lack of servicing, of the motorcycle. In addition to the WARNINGS and CAUTIONS stated, you must use good judgement and basic mechanical safety principles. If you are unsure about how to perform a particular service operation, ask a more experienced mechanic for advice.

GENERAL PRECAUTIONS

⚠ WARNING

- **Proper service and repair procedures are important for the safety of the service mechanic and the safety and reliability of the vehicle.**
- **When 2 or more persons work together, pay attention to the safety of each other.**
- **When it is necessary to run the engine indoors, make sure that exhaust gas is forced outdoors.**
- **When working with toxic or flammable materials, make sure that the area you work in is well-ventilated and that you follow all of the material manufacturer's instructions.**
- **Never use gasoline as a cleaning solvent.**
- **To avoid getting burned, do not touch the engine, engine oil or exhaust system during or for a while after engine operation.**
- **After servicing fuel, oil, exhaust or brake systems, check all lines and fittings related to the system for leaks.**

⚠ CAUTION

- If parts replacement is necessary, replace the parts with Suzuki Genuine Parts or their equivalent.
- When removing parts that are to be reused, keep them arranged in an orderly manner so that they may be reinstalled in the proper order and orientation.
- Be sure to use special tools when instructed.
- Make sure that all parts used in reassembly are clean, and also lubricated when specified.
- When use of a certain type of lubricant, bond, or sealant is specified, be sure to use the specified type.
- When removing the battery, disconnect the negative cable first and then the positive cable. When reconnecting the battery, connect the positive cable first and then the negative cable, and replace the terminal cover on the positive terminal.
- When performing service to electrical parts, if the service procedures not require use of battery power, disconnect the negative cable the battery.
- Tighten cylinder head and case bolts and nuts, beginning with larger diameter and ending with smaller diameter, from inside to outside diagonally, to the specified tightening torque.
- Whenever you remove oil seals, gaskets, packing, O-rings, locking washers, cotter pins, circlips, and certain other parts as specified, be sure to replace them with new ones. Also, before installing these new parts, be sure to remove any left over material from the mating surfaces.
- Never reuse a circlip. When installing a new circlip, take care not to expand the end gap larger than required to slip the circlip over the shaft. After installing a circlip, always ensure that it is completely seated in its groove and securely fitted.
- Do not use self-locking nuts a few times over.
- Use a torque wrench to tighten fastners to the torque values when specified. Wipe off grease or oil if a thread is smeared with them.
- After reassembly, check parts for tightness and operation.

- To protect environment, do not unlawfully dispose of used motor oil and other fluids: batteries, and tires.
- To protect Earth's natural resouces, properly dispose of used vehicles and parts.

SUZUKI DR650SET ('96-MODEL)

RIGHT SIDE

LEFT SIDE

*Difference between photographs and actual motorcycles depends on the markets.

SERIAL NUMBER LOCATION

The frame serial number or V.I.N. (Vehicle Identification Number) ① is stamped on the right side of the steering head pipe. The engine serial number ② is located on the left side of the crankcase. These numbers are required especially for registering the machine and ordering spare parts.

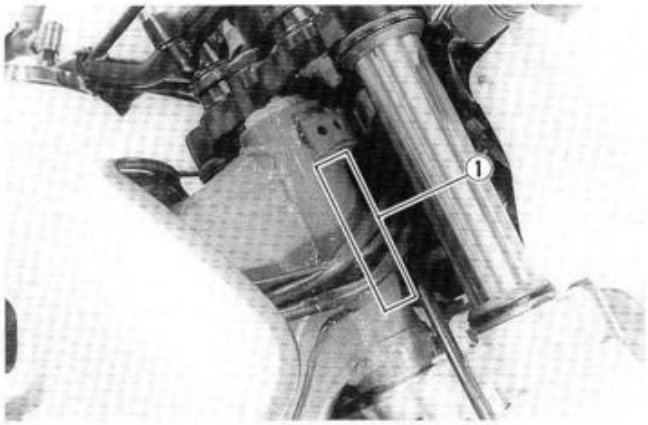

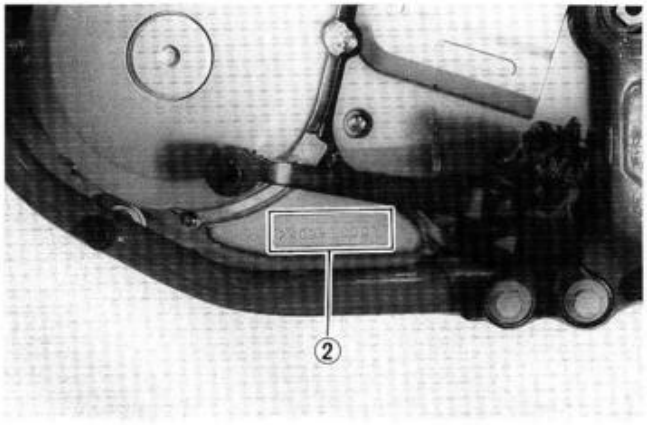

FUEL AND OIL RECOMMENDATION

FUEL (For U.S.A. model)

1. Use only unleaded gasoline of at least 87 pump octane ($\frac{R+M}{2}$) method or 91 octane or higher rated by the research method.
2. Suzuki recommends that customers use alcohol free, unleaded gasoline whenever possible.
3. Use of blended gasoline containing MTBE (Methyl Tertiary Butyl Ether) is permitted.
4. Use of blended gasoline/alcohol fuel is permitted, provided that the fuel contains not more than 10% ethanol. Gasoline/alcohol fuel may contain up to 5% methanol if appropriate cosolvents and corrosion inhibitors are present in it.
5. If the performance of the vehicle is unsatisfactory while using blended gasoline/alcohol fuel, you should switch to alcohol-free unleaded gasoline.
6. Failure to follow these guideline could possibly void applicable warranty coverage. Check with your fuel supplier to make sure that the fuel you intend to use meets the requirements listed above.

FUEL (For Canadian model)

Use only unleaded gasoline of at least 87 pump octane ($\frac{R+M}{2}$) method or 91 octane or higher rated by the research method.

FUEL (For the other models)

Gasoline used should be graded 85—95 octane (Research Method) or higher. An unleaded gasoline type is recommended.

ENGINE OIL (For U.S.A. model)

SUZUKI recommends the use of SUZUKI PERFORMANCE 4 MOTOR OIL or an oil which is rated SE, SF or SG under the API (American Petroleum Institute) classification system. The viscosity rating is SAE 10W/40. If an SAE 10W/40 motor oil is not available, select an alternate according to the right chart.

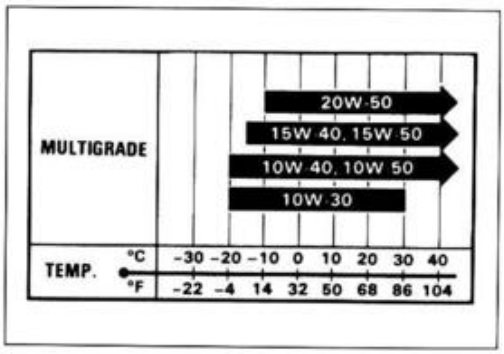

ENGINE OIL (For the other models)

Make sure that the engine oil you use comes under API classification of SE, SF or SG and that its viscosity rating is SAE 10W/40. If an SAE 10W/40 motor oil is not available, select an alternate according to the right chart.

BRAKE FLUID

Specification and classification: DOT 4

⚠ WARNING

Since the brake system of this motorcycle is filled with a glycol-based brake fluid by the manufacturer, do not use or mix different types of fluid such as silicone-based and petroleum-based fluid for refilling the system, otherwise serious damage will result.
Do not use any brake fluid taken from old or used or unsealed containers.
Never re-use brake fluid left over from a previous servicing, which has been stored for a long period.

FRONT FORK OIL

Use fork oil # 10

BREAK-IN PROCEDURES

During manufacture only the best possible materials are used and all machined parts are finished to a very high standard but it is still necessary to allow the moving parts to "BREAK-IN" before subjecting the engine to maximum stresses. The future performance and reliability of the engine depends on the care and restraint exercised during its early life. The general rules are as follows.

- Keep to these break-in procedures:

Initial 800 km (500 miles): Less than 1/2 throttle
Up to 1 600 km (1 000 miles): Less than 3/4 throttle

- Upon reaching an odometer reading of 1 600 km (1 000 miles) you can subject the motorcycle to full throttle operation.
- Do not maintain constant engine speed for an extended time period during any portion of the break-in. Try to vary the throttle position.

INFORMATION LABELS

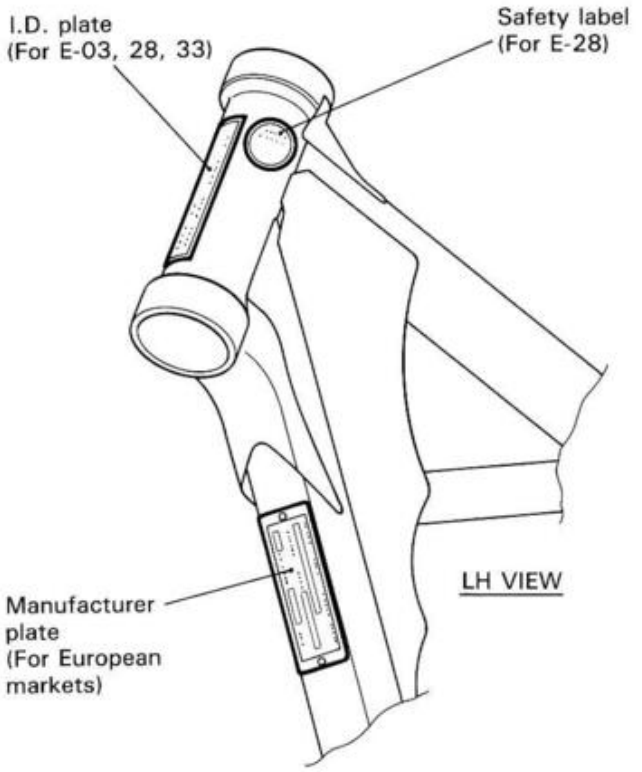

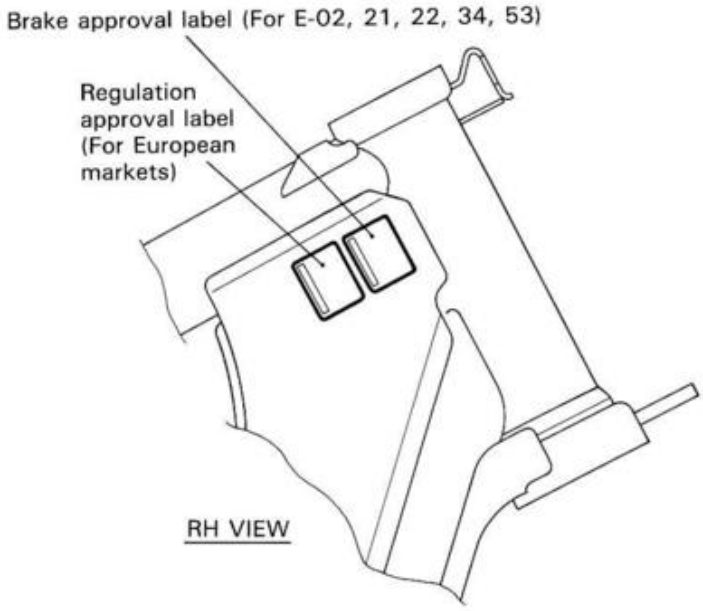

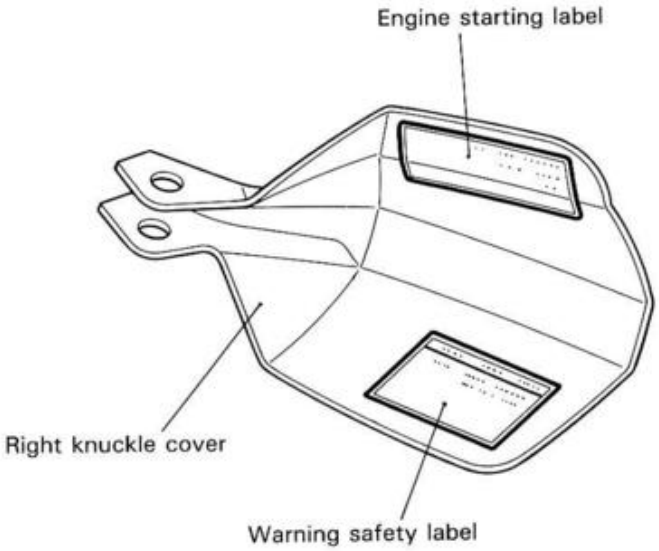

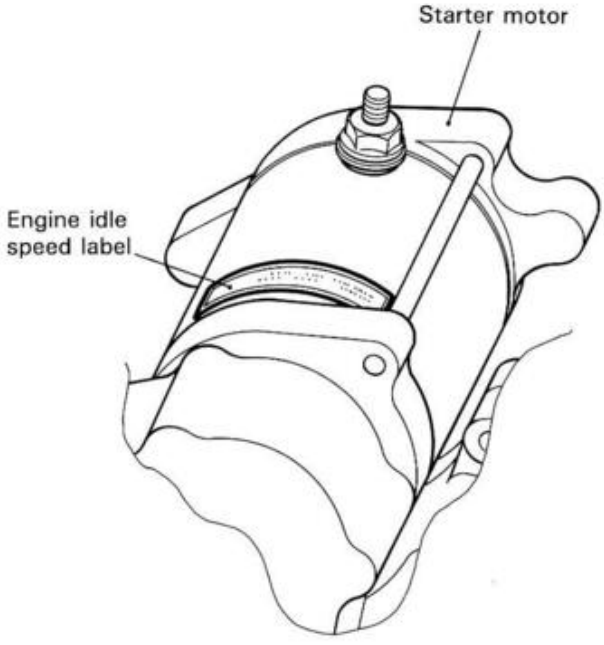

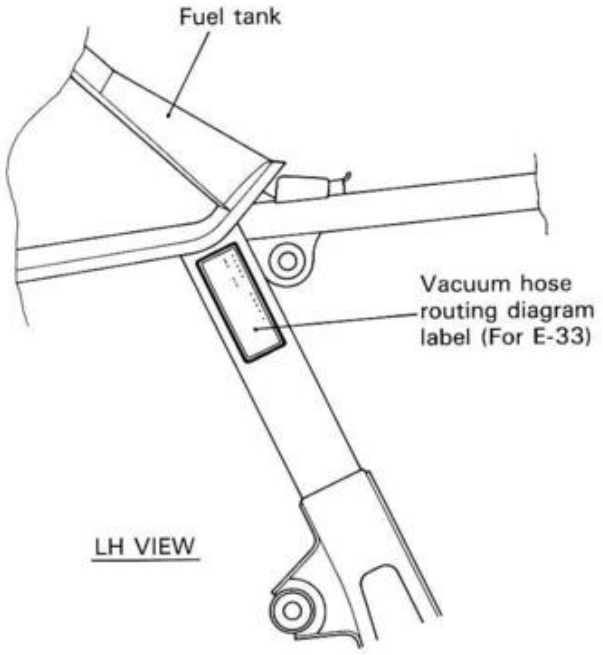
Fuel tank
Vacuum hose routing diagram label (For E-33)
LH VIEW

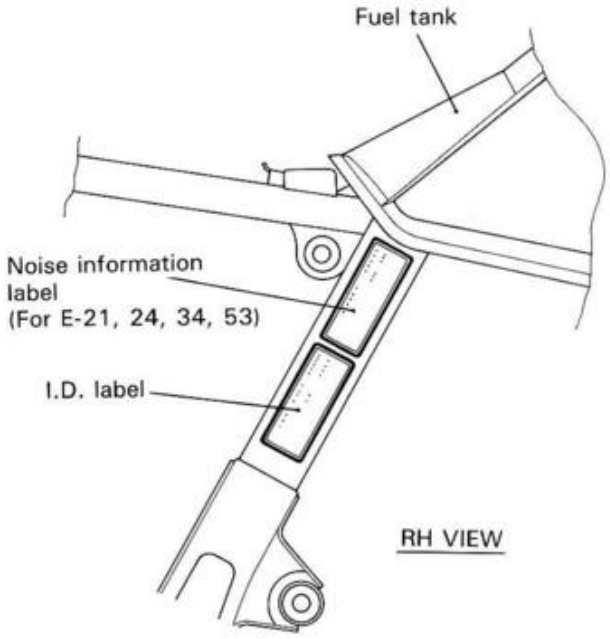
Fuel tank
Noise information label (For E-21, 24, 34, 53)
I.D. label
RH VIEW

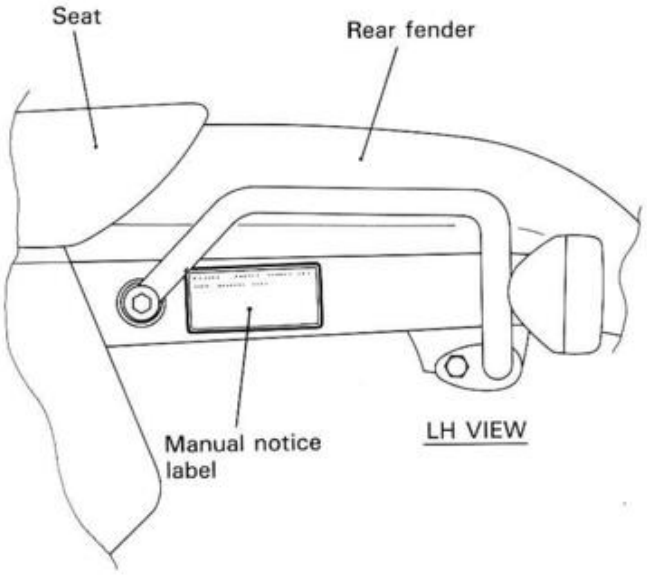
Seat
Rear fender
Manual notice label
LH VIEW

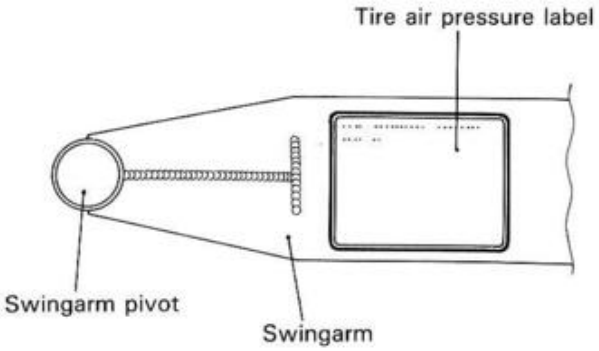
Tire air pressure label
Swingarm pivot
Swingarm

SPECIFICATIONS

DIMENSIONS AND DRY MASS

Overall length	2 345 mm (92.3 in) E18, 22
	2 325 mm (91.5 in) ..... E18, 22 (Low seat)
	2 255 mm (88.8 in) ..... Others
	2 235 mm (88.0 in) ..... Others (Low seat)
Overall width	865 mm (34.1 in)
Overall height	1 205 mm (47.4 in)
	1 165 mm (45.9 in) ..... (Low seat)
Wheelbase	1 490 mm (58.7 in)
	1 475 mm (58.1 in) ..... (Low seat)
Ground clearance	265 mm (10.4 in)
	225 mm (8.9 in) ..... (Low seat)
Seat height	885 mm (34.8 in)
	845 mm (33 in) ..... (Low seat)
Dry mass	147 kg (324 lbs)

ENGINE

Type	Four-stroke, air-cooled, with SACS, OHC
Valve clearance (IN)	0.08—0.13 mm (0.003—0.005 in)
(EX)	0.17—0.22 mm (0.007—0.009 in)
Number of cylinders	1
Bore	100 mm (3.937 in)
Stroke	82 mm (3.228 in)
Piston displacement	644 cm^3 (39.3 cu. in)
Compression ratio	9.5 : 1
Carburetor	BST40, single
Air cleaner	Polyurethane foam element
Starter system	Electric
Lubrication system	Wet sump

TRANSMISSION

Clutch	Wet multi-plate type
Transmission	5-speed constant mesh
Gearshift pattern	1-down, 4-up
Primary reduction ratio	2.178 (61/28)
Gear ratios, Low	2.416 (29/12)
2nd	1.625 (26/16)
3rd	1.238 (26/21)
4th	1.000 (21/21)
Top	0.826 (19/23)
Final reduction ratio	2.800 (42/15) E03,28,33
	2.733 (41/15) ..... Others
Drive chain	DID525 V9, 110 links

CHASSIS

Front suspension	Telescopic, coil spring, oil damped
Rear suspension	Link type, coil spring, gas/oil damped, spring pre-load fully adjustable, compression damping force adjustable
Front fork stroke	260 mm (10.2 in)
	220 mm (8.7 in) ..... (Low seat)
Rear wheel travel	260 mm (10.2 in)
	220 mm (8.7 in) ..... (Low seat)
Steering angle	43°
Caster	28° 30'
Trail	111 mm (4.37 in)
Turning radius	2.5 m (8.2 ft)
Front brake	Disc brake
Rear brake	Disc brake
Front tire size	90/90-21 54S, tube type
Rear tire size	120/90-17 64S, tube type

ELECTRICAL

Ignition type	Electronic ignition (CDI)
Ignition timing	10° B.T.D.C. at 1 500 rpm
Spark plug	NGK CR10E or NIPPONDENSO U31ESR-N
Battery	12V 28.8 kC (8 Ah)/10 HR
Generator	Three-phase A.C. generator
Fuse	30/10/10A
Headlight	12V 60/55W
Parking or city light	12V 4W ..... except E03, 24, 28, 33
Turn signal light	12V 21W
Tail/brake light	12V 5/21W
License plate light	12V 5W
Speedometer light	12V 3W
Neutral indicator light	12V 2W
High beam indicator light	12V 2W
Turn signal indicator light	12V 2W

CAPACITIES

Fuel tank, including reserve	12.0 L (3.2/2.6 US/Imp gal) E33
	13.0 L (3.4/2.9 US/Imp gal) ..... Others
reserve	3.0 L (0.8/0.7 US/Imp gal)
Engine oil, oil change	2 300 ml (2.4/2.0 US/Imp qt)
with filter change	2 400 ml (2.5/2.1 US/Imp qt)
overhaul	2 600 ml (2.7/2.3 US/Imp qt)
Front fork oil (each leg)	565 ml (19.1/19.9 US/Imp oz)
	563 ml (19.0/19.8 US/Imp oz) ..... (Low seat)

COUNTRY OR AREA

The series of symbols on the left stand for the countries or area on the right.

SYMBOL	COUNTRY or AREA
E-02	U.K.
E-03	U.S.A.
E-04	France
E-15	Finland
E-16	Norway
E-17	Sweden
E-18	Switzerland
E-21	Belgium
E-22	Germany
E-24	Australia
E-25	Netherlands
E-28	Canada
E-33	California (U.S.A.)
E-34	Italy
E-37	Brazil
E-39	Austria
E-53	Spain

(E-15 and 16 countries are included in E-17.
E-21 and 53 countries are included in E-34.
E-39 country is included in E-18.)

PERIODIC MAINTENANCE

2

CONTENTS

PERIODIC MAINTENANCE SCHEDULE 2- 1
PERIODIC MAINTENANCE CHART 2- 1
LUBRICATION POINTS 2- 2
MAINTENANCE AND TUNE-UP PROCEDURES 2- 3
VALVE CLEARANCE 2- 3
SPARK PLUGS 2- 4
AIR CLEANER ELEMENT 2- 5
CARBURETOR 2- 6
FUEL LINE 2- 7
FUEL VALVE STRAINER 2- 7
CLUTCH 2- 7
ENGINE OIL AND OIL FILTER 2- 8
DRIVE CHAIN 2- 9
BRAKES 2-10
TIRES 2-12
SPARK ARRESTER 2-13
STEERING 2-13
FRONT FORKS 2-14
REAR SUSPENSION 2-14
EXHAUST PIPE AND MUFFLER BOLTS 2-14
CHASSIS BOLTS AND NUTS 2-15
COMPRESSION PRESSURE CHECK 2-17
OIL PRESSURE CHECK 2-18

PERIODIC MAINTENANCE SCHEDULE

IMPORTANT: The periodic maintenance intervals and service requirements have been established in accordance with EPA regulations. Following these instructions will ensure that the motorcycle will not exceed emission standards and it will also ensure the reliability and performance of the motorcycle.

The chart below lists the recommended intervals for all the required periodic service work necessary to keep the motorcycle operating at peak performance and economy. Mileages are expressed in terms of kilometer, miles and time for your convenience.

NOTE:
More frequent servicing may be performed on motorcycles that are used under severe conditions.

PERIODIC MAINTENANCE CHART

INTERVAL: THIS INTERVAL SHOULD BE JUDGED BY ODOMETER READING OR MONTHS WHICHEVER COMES FIRST	km	1 000	6 000	12 000	18 000	24 000
	miles	600	4 000	7 500	11 000	15 000
	months	2	12	24	36	48
Valve clearance		I	—	I	—	I
Spark plugs		—	I	R	I	R
Air cleaner element		Clean every 3 000 km (2 000 miles).				
Carburetor idle rpm		I	I	I	I	I
Fuel line (EVAP hose ... California model only)		I	I	I	I	I
		Replace every 4 years.				
Fuel valve strainer		—	—	C	—	C
Clutch		I	I	I	I	I
Engine oil		R	R	R	R	R
Engine oil filter		R	—	R	—	R
Drive chain		I	I	I	I	I
		Clean and lubricate every 1 000 km (600 miles).				
Brakes		I	I	I	I	I
Brake hose		—	I	I	I	I
		Replace every 4 years.				
Brake fluid		—	I	I	I	I
		Change every 2 years.				
Tires		—	I	I	I	I
Spark arrester		Clean every 6 000 km (4 000 miles). (For Canada and U.S.A.)				
Steering		I	—	I	—	I
Front forks		—	—	I	—	I
Rear suspension		—	—	I	—	I
Exhaust pipe and muffler bolts		T	—	T	—	T
Chassis bolts and nuts		T	T	T	T	T

NOTE: I: Inspection and adjust, clean, lubricate or replace as necessary.
R: Replace T: Tighten C: Clean

LUBRICATION POINTS

Proper lubrication is important for smooth operation and long life of each working part of the motorcycle.

Major lubrication points are indicated below.

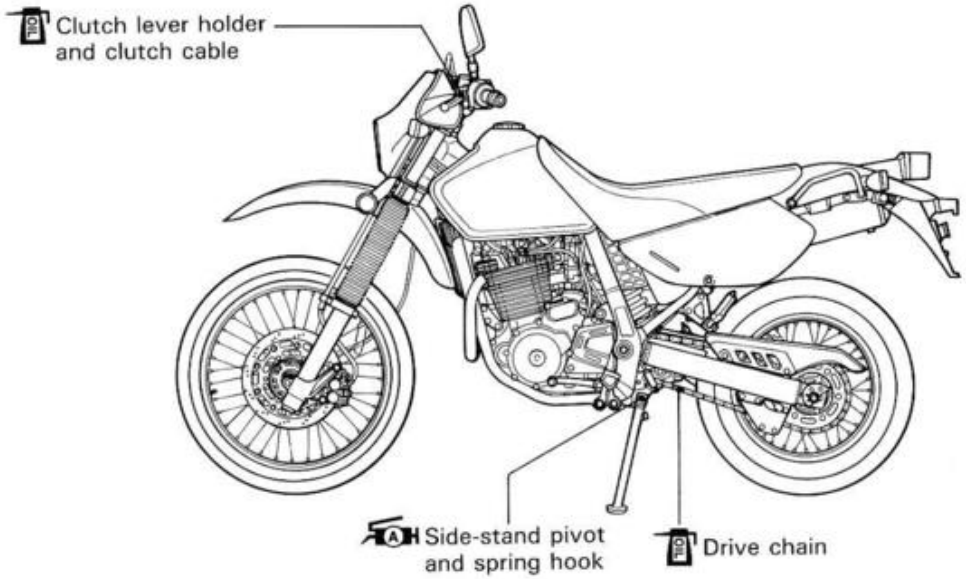

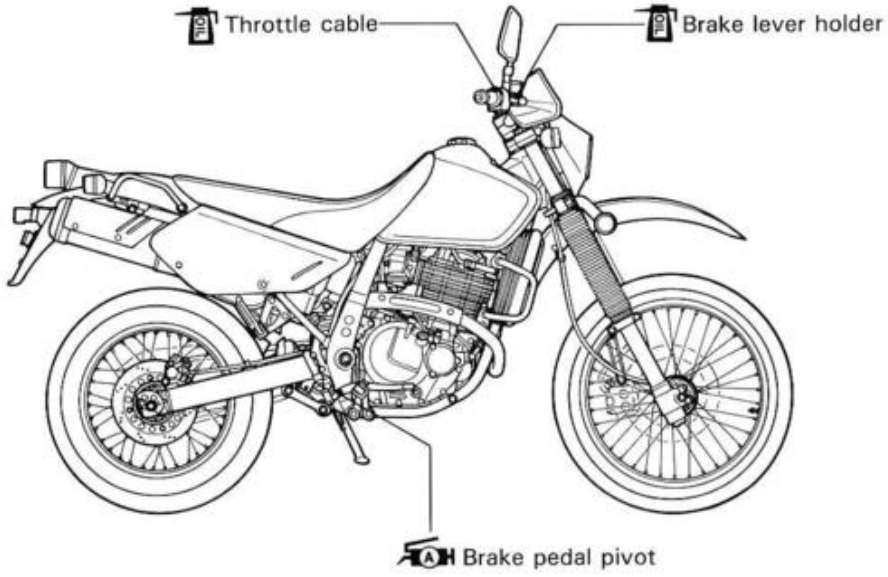

NOTE:

* *Lubricate exposed parts which are subject to rust, with a rust preventative spray whenever the motorcycle has been operated under wet or rainy conditions. If the spray is unavailable, use either motor oil or grease.*
* *Before lubricating each part, clean off any rusty spots and wipe off any grease, oil, dirt or grime.*

MAINTENANCE AND TUNE-UP PROCEDURES

This section describes the servicing procedures for each item of the Periodic Maintenance requirements.

VALVE CLEARANCE

Inspect Initially at 1 000 km (600 miles, 2 months) and Every 12 000 km (7 500 miles, 24 months) thereafter.

The valve clearance specification is different for intake and exhaust valves.
Valve clearance adjustment must be checked and adjusted, 1) at the time of periodic inspection, 2) when the valve mechanism is serviced, and 3) when the camshaft is disturbed by removing it for servicing.

Valve clearance (when cold):
IN.: 0.08—0.13 mm (0.003—0.005 in)
EX.: 0.17—0.22 mm (0.007—0.009 in)

NOTE:
Valve clearance is to be checked when the engine is cold. Both intake and exhaust valves must be checked and adjusted when the piston is at Top—Dead—Center (TDC) on the compression stroke.

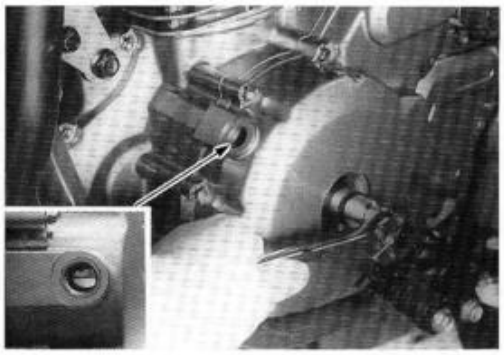

- Remove the frame covers, seat and fuel tank.
- Remove the spark plug and valve inspection caps, intake and exhaust.
- Remove the valve timing inspection plug and magneto cover cap.
- Turn the crankshaft counterclockwise with the box wrench to set the piston at T.D.C. on the compression stroke. (Turn the crankshaft until the "T" line ① on the magneto rotor is aligned with the center of hole on the magneto cover.)
- Insert the thickness gauge into the clearance between the valve stem end and the adjusting screw on the rocker arm.

TOOL 09900-20803: Thickness gauge
09917-14910: Valve clearance adjusting driver

- If clearance is out of the specification, bring it into the specified range.
- Securely tighten the lock nut after adjustment is completed.

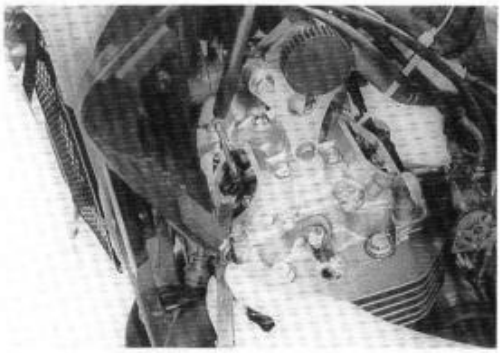

⚠ CAUTION

Both right and left valve clearances, should be as closely set as possible.

- Reinstall the spark plug, valve inspection caps, valve timing inspection plug and magneto cover cap.

SPARK PLUGS

Inspect Every 6 000 km (4 000 miles, 12 months) and Replace Every 12 000 km (7 500 miles, 24 months).

- Remove the spark plugs.

09930-10121: Spark plug socket wrench set

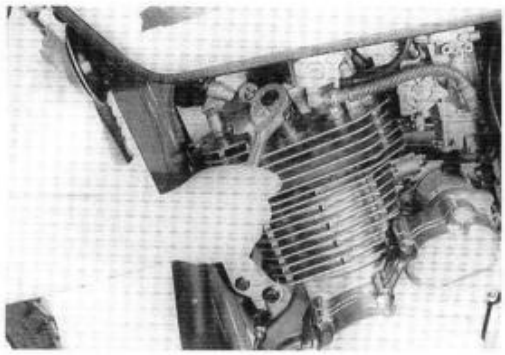

	Standard	Hot type
NGK	CR10E	CR9E
ND	U31ESR-N	U27ESR-N

CARBON DEPOSIT

Check to see the carbon deposit on the plug.
If the carbon is deposited, remove it with a spark plug cleaner machine or carefully using a tool with a pointed end.

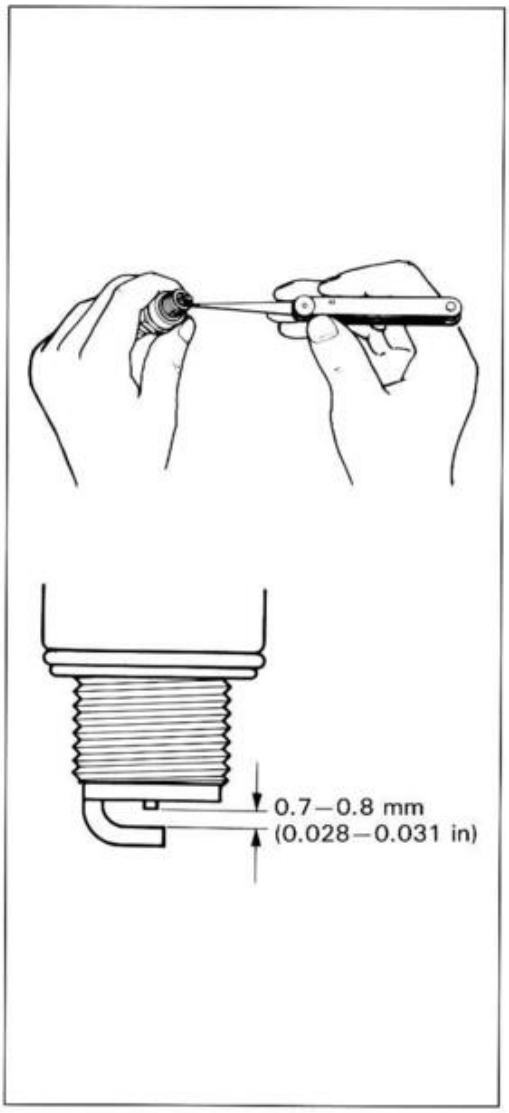

SPARK PLUG GAP

Measure the plug gap with a thickness gauge if it is correct.
If not, adjust it to the following gap.

	Standard
Spark plug gap	0.7—0.8 mm (0.028—0.031 in)

09900-20803: Thickness gauge

ELECTRODE'S CONDITION

Check to see the worn or burnt condition of the electrodes.
If it is extremely worn or burnt, replace the plug. And also replace the plug if it has a broken insulator, damaged thread, etc.

⚠ CAUTION

Confirm the thread size and reach when replacing the plug. If the reach is too short, carbon will be deposited on the screw portion of the plug hole and engine damage may result.

AIR CLEANER ELEMENT

Clean Every 3 000 km (2 000 miles).

If the air cleaner is clogged with dust, intake resistance will be increased with a resultant decrease in power output and an increase in fuel consumption.
Check and clean the element in the following manner.

- Remove the left frame cover.
- Remove the air cleaner case cover by removing screws ①.
- Remove the air cleaner element by removing its support screw ②.
- Remove the polyurethane foam element ③ from the element frame ④.
- Fill a washing pan of a proper size with non-flammable cleaning solvent. Immerse the element in the cleaning solvent and wash it clean.
- Squeeze the cleaning solvent out of the washed element by pressing it between the palms of both hands.
- Immerse the element in motor oil, and squeeze the oil out of the element leaving it slightly wet with oil.

NOTE:
Do not twist or wring the element because it will tear or the individual cells of the element will be damaged.

⚠ CAUTION

Inspect the element carefully for rips, torn seams, etc. If any damage is noted, replace the element.

- Reinstall the cleaned or new cleaner element in the reverse order of removal.
- When installing the air cleaner element in the cleaner case, make sure that the "UP" mark comes upward.

⚠ CAUTION

If driving under dusty conditions, clean the air cleaner element more frequently. The surest way to accelerate engine wear is to use the engine without the element or to use a ruptured element. Make sure that the air cleaner is in good condition at all times. Life of the engine depends largely on this component!

NOTE:
When you clean the air cleaner element, drain water from the air cleaner drain hose by removing the drain plug.

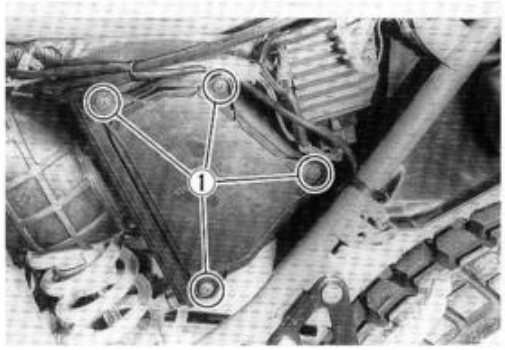

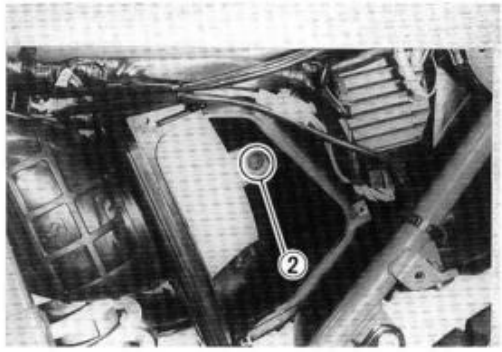

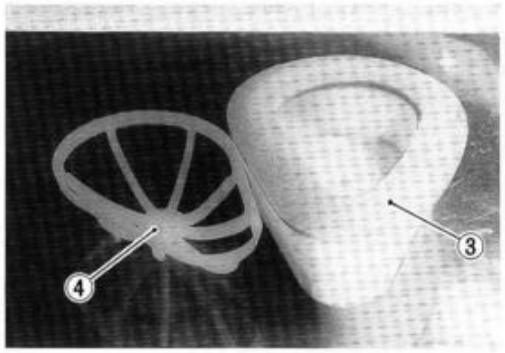

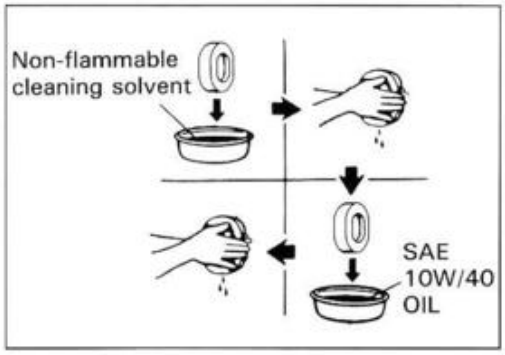

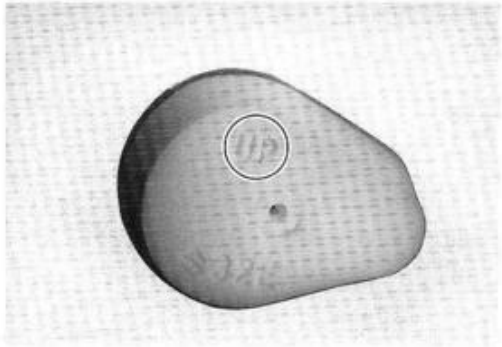

CARBURETOR

Inspect Initially at 1 000 km (600 miles, 2 months) and Every 6 000 km (4 000 miles, 12 months) thereafter.

THROTTLE CABLE ADJUSTMENT

A twin throttle cable system is used in this motorcycle. Cable ① is for pulling and cable ② is for returning. To adjust the cable play, adjust the returning cable first and then adjust the pulling cable.

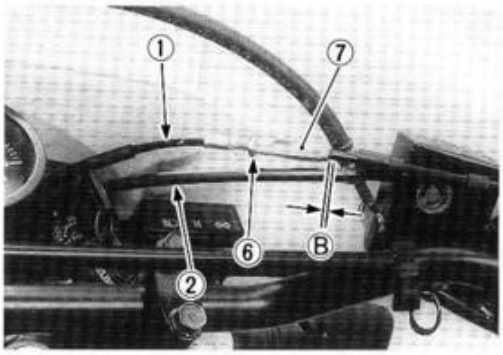

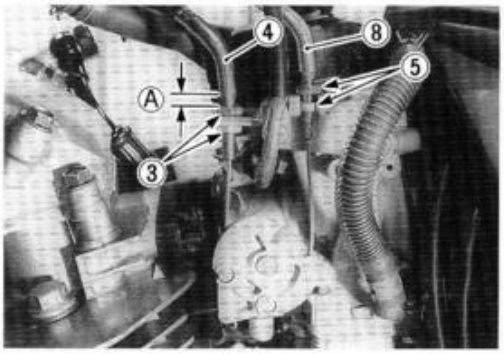

Returning cable play

The returning cable should be adjusted to have a thread length Ⓐ of 3—4 mm (0.12—0.16 in) as shown in the Fig. If the adjustment is necessary, adjust the thread length in the following way:

- Loosen the lock nuts ③.
- Move the adjuster ④ to obtain the thread length Ⓐ of 3—4 mm (0.12—0.16 in).
- Tighten the lock nuts ③ securely.

Pulling cable play

The pulling cable should be adjusted to have a cable play Ⓑ of 0.5—1.0 mm (0.02—0.04 in) as shown in the Fig. If the adjustment is necessary, adjust the cable play in the following way:

- Turn the handlebar all the way to the left.
- Loosen the lock nuts (⑤, ⑥).
- Turn the adjuster ⑦ or move the adjuster ⑧ to obtain the cable play Ⓑ of 0.5—1.0 mm (0.02—0.04 in).
- Tighten the lock nuts (⑤, ⑥) securely.

⚠ WARNING

After the adjustment is completed, check that handlebar movement does not raise the engine idle speed and that the throttle grip returns smoothly and automatically.

IDLE RPM ADJUSTMENT

NOTE:
Make this adjustment when the engine is warm.

- Connect a tachometer.

TOOL 09900-26006: Tachometer

- Start up the engine and set its speed at anywhere between 1 400 and 1 600 r/min by turning the throttle stop screw ①.
- Turn in or out the pilot screw within 1/2 turn from the standard setting, and set it when the engine speed is at the highest possible level.
- After previous adjustment, recheck the idling speed and adjust to between 1 400 and 1 600 r/min with throttle stop screw if necessary.

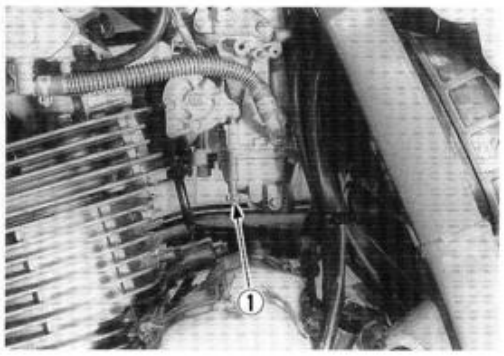

Engine idle speed:
1 500 ± 50 r/min ... for Switzerland
1 500 ± 100 r/min ... for the Others

FUEL LINE (EVAP HOSE ... California model only)

Inspect Initially at 1 000 km (600 miles, 2 months) and Every 6 000 km (4 000 miles, 12 months) thereafter. Replace Every 4 years.

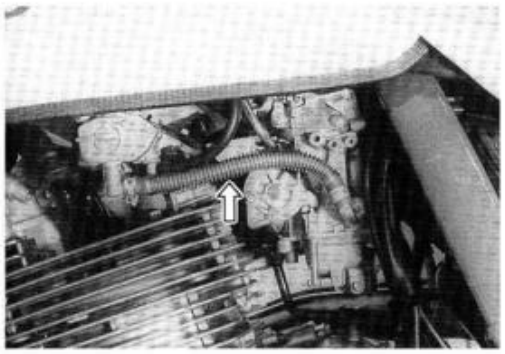

FUEL VALVE STRAINER

Clean Every 12 000 km (7 500 miles, 24 months).

Refer to page 4-2 for removal procedure.

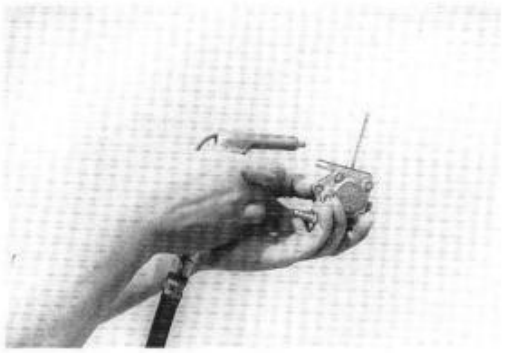

CLUTCH

Inspect Initially at 1 000 km (600 miles, 2 months) and Every 6 000 km (4 000 miles, 12 months) thereafter.

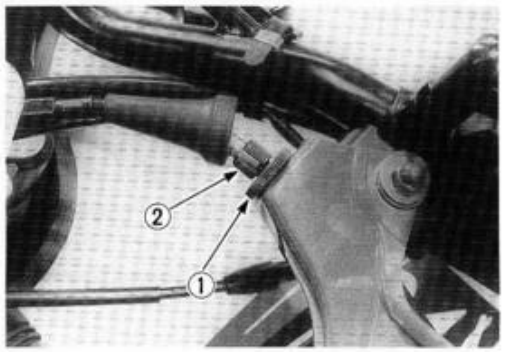

- Loosen the lock nut ① and turn the clutch cable adjuster ② fully in.
- Loosen the lock nut ③ and turn the clutch cable adjuster ④ to provide the specified clutch lever play Ⓐ.

Clutch lever play Ⓐ: 10—15 mm (0.4—0.6 in)

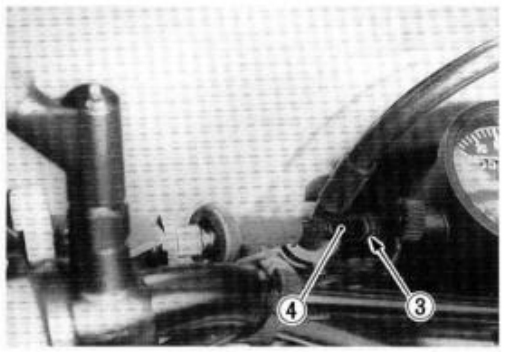

- Tighten the lock nuts (① and ③) while holding the adjusters (② and ④) in positions.

NOTE:
Minor adjustment can be made by the adjuster ② after loosening the lock nut ①. At the same intervals, lubricate the clutch cable with motor oil

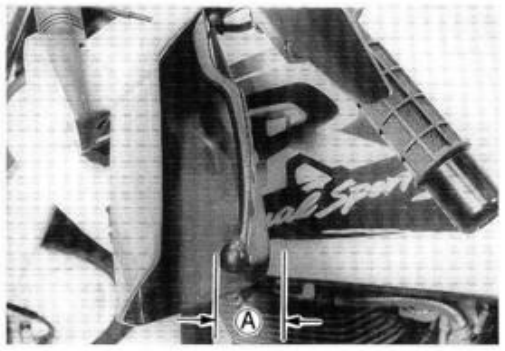

ENGINE OIL AND OIL FILTER

(ENGINE OIL)
Replace (Change) Initially at 1 000 km (600 miles, 2 months) and Every 6 000 km (4 000 miles, 12 months) thereafter.

(OIL FILTER)
Replace Initially at 1 000 km (600 miles, 2 months) and Every 12 000 km (7 500 miles, 24 months) thereafter.

Oil should be changed while the engine is warm. Oil filter replacement at the above intervals should be done together with engine oil change.

- Keep the motorcycle upright, supported by jack or wooden block.
- Place an oil pan below the engine and remove the engine oil drain plug ① and oil filler cap ② to drain engine oil.
- Remove the oil filter cap by removing the three bolts ③.
- Remove the oil filter ④ and install the new one.
- Install the oil filter cap and tighten the bolts ③ securely.

NOTE:
Before installing the oil filter and oil filter cap, check to be sure that the spring ⑤ and new O-rings (⑥ and ⑦) are installed correctly and apply engine oil lightly to the new O-ring ⑥.

- Tighten the oil drain plug ① securely, and pour fresh oil through the oil filler. The engine will hold about 2 300 ml of oil. Use an API classification of SE, SF or SG oil with SAE 10W/40 viscosity.

Drain plug: 24 N·m (2.4 kg-m, 17.5 lb-ft)

- Install the oil filler cap ②.
- Start up the engine and allow it to run for several minutes at idling speed.
- Turn off the engine and wait about one minute, then check the oil level through the inspection window ⑧. If the level is below mark "F", add oil to the level.

NECESSARY AMOUNT OF ENGINE OIL
Oil change : 2 300 ml (2.4/2.0 US/Imp qt)
Filter change : 2 400 ml (2.5/2.1 US/Imp qt)
Overhaul engine: 2 600 ml (2.7/2.3 US/Imp qt)

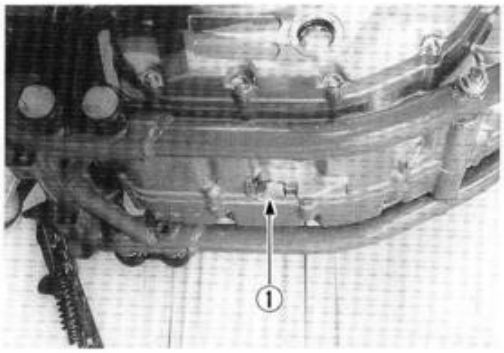

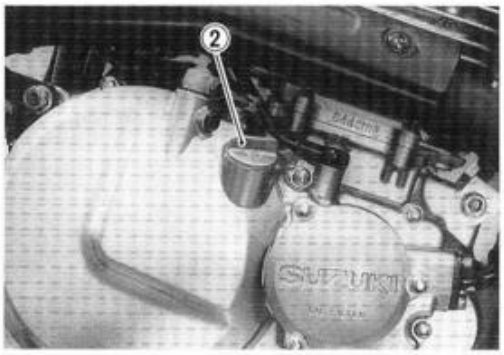

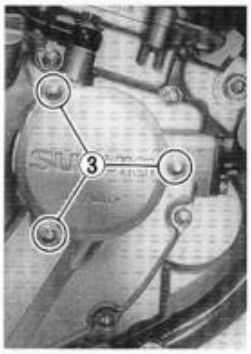

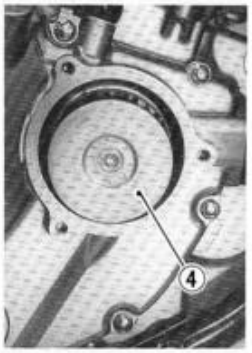

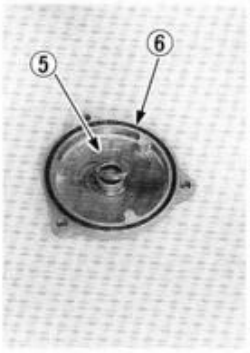

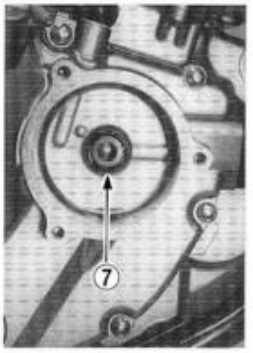

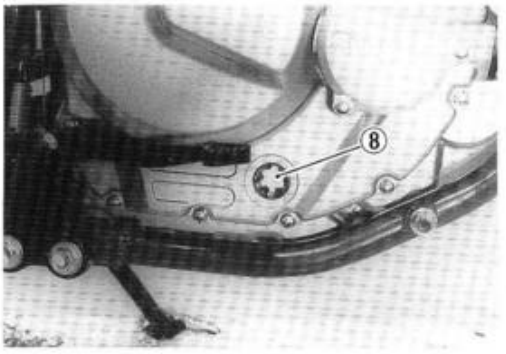

DRIVE CHAIN

Inspect Initially at 1 000 km (600 miles, 2 months) and Every 6 000 km (4 000 miles, 12 months) thereafter. Clean and Lubricate Every 1 000 km (600 miles).

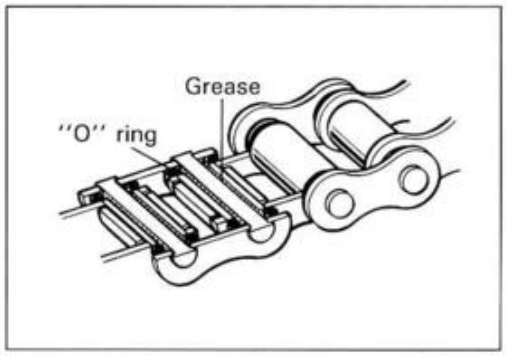

Visually check the drive chain for the possible defects listed below. (Support the motorcycle by a jack and a wooden block, turn the rear wheel slowly by hand with the transmission shifted to Neutral.)

* Loose pins
* Damaged rollers
* Dry or rusted links
* Kinked or binding links
* Excessive wear
* Improper chain adjustment
* Missing O-ring seals

If any defects are found, the drive chain must be replaced.

NOTE:
When replacing the drive chain, replace the drive chain and sprockets as a set.

CHECKING

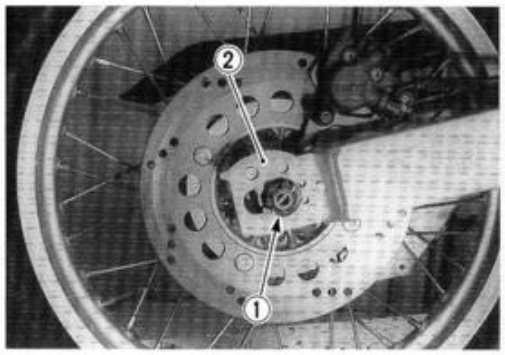

- Remove the axle cotter pin (Canada and U.S.A).
- Loosen the axle nut ① .
- Tense the drive chain fully by turning both chain adjusters ② .
- Count out 21 pins (20 pitches) on the chain and measure the distance between the two points. If the distance exceeds the service limit, the chain must be replaced.

	Service Limit
Drive chain 20-pitch length	319.4 mm (12.6 in)

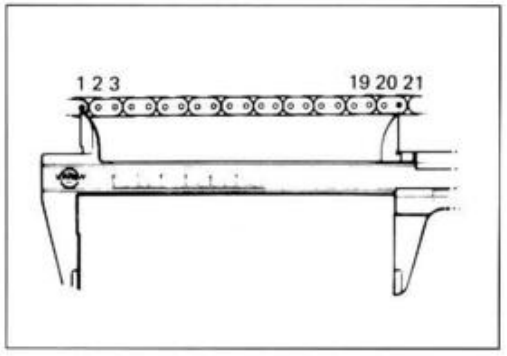

ADJUSTING

- Turn both chain adjusters ② until the chain has 30—45 mm (1.2—1.8 in) of slack in the middle between engine and rear sprockets. The number on both chain adjusters must be at the same number on the scale to ensure that the front and rear wheels are correctly aligned.
- Place the motorcycle on its side-stand for accurate adjustment.
- After adjusting the drive chain, tighten the axle nut ① to the specified torque.

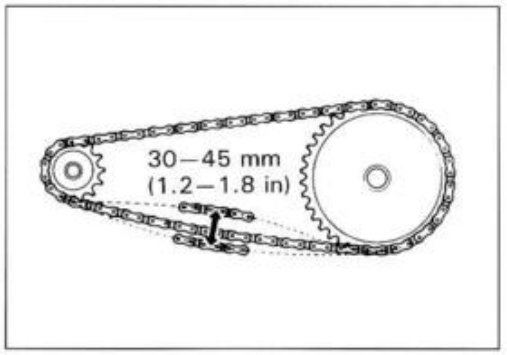

Rear axle nut: 100 N·m (10.0 kg-m, 72.5 lb-ft) (with cotter pin)

Rear axle nut: 110 N·m (11.0 kg-m, 79.5 lb-ft) (Self-locking)

CLEANING AND LUBRICATING

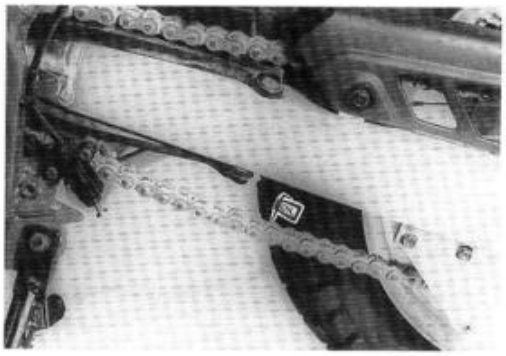

- Wash the chain with kerosene. If the chain tends to rust quickly, the intervals must be shortened.

⚠ CAUTION

Do not use trichlene, gasoline or any similar fluids: These fluids have too great a dissolving power for this chain and, what is more important, they can damage the "O"-rings (or seals) confining the grease in the bush to pin clearance. Remember, high durability comes from the presence of grease in that clearance.

- After washing and drying the chain, oil it with a heavy-weight motor oil.

⚠ CAUTION

*** Do not use any oil sold commercially as "drive chain oil". Such oil can damage the "O"-rings (or seals).**
*** The standard drive chain is D.I.D. 525 V9, 110 links. SUZUKI recommends that this standard drive chain should be used for the replacement.**

BRAKES

(BRAKE)
Inspect Initially at 1 000 km (600 miles, 2 months) and Every 6 000 km (4 000 miles, 12 months) thereafter.

(BRAKE HOSE AND BRAKE FLUID)
Inspect Every 6 000 km (4 000 miles, 12 months). Replace hoses Every 4 years. Replace fluid Every 2 years.

BRAKE FLUID LEVEL

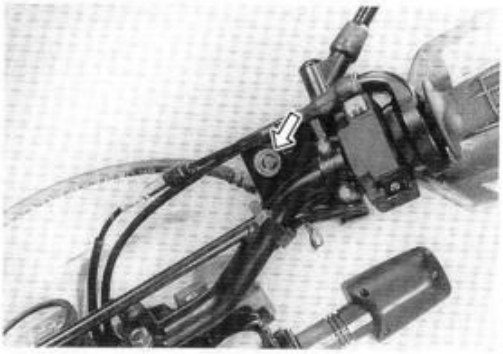

- Keep the motorcycle upright and place the handlebars straight.
- Check the brake fluid level by observing the lower limit lines on the front and rear brake fluid reservoirs.
- When the level is below the lower limit line, replenish with brake fluid that meets the following specification.

BF Specification and Classification: DOT 4

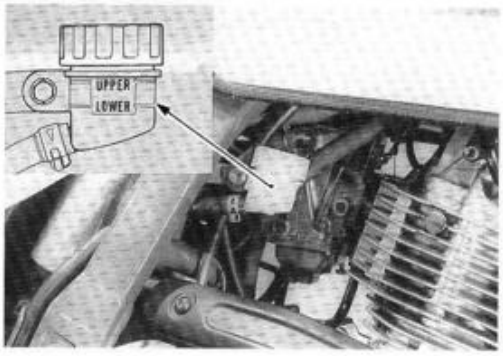

⚠ WARNING

The brake system of this motorcycle is filled with a glycol-based brake fluid. Do not use or mix different types of fluid such as silicone-based or petroleum-based. Do not use any brake fluid taken from old, used or unsealed containers. Never re-use brake fluid left over from the last servicing or stored for a long period.

⚠ WARNING

Brake fluid, if it leaks, will interfere with safe running and immediately discolor painted surfaces. Check the brake hoses and hose joints for cracks and oil leakage before riding.

BRAKE PADS

The extent of brake pad wear can be checked by observing the grooved limit line ① on the pad. When the wear exceeds the grooved limit line, replace the pads with new ones. (Refer to pages 5-7 and 5-34.)

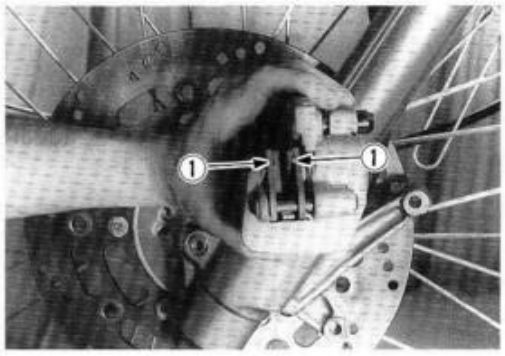

⚠ CAUTION

Replace the brake pad as a set, otherwise braking performance will be adversely affected.

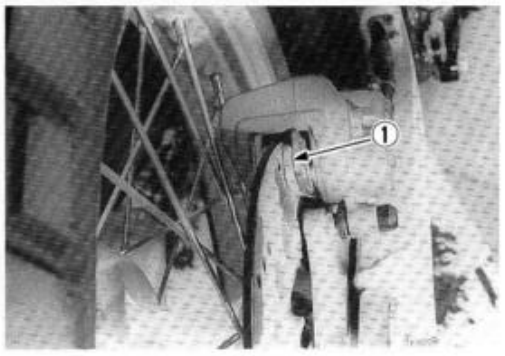

BRAKE PEDAL HEIGHT

- Loosen the lock nut ③ and rotate the push rod ④ to locate brake pedal 5 mm below the top face of the footrest.
- Retighten the lock nut ③ to secure the push rod ④ in the proper position.

Brake pedal height Ⓐ: 5 mm (0.2 in)

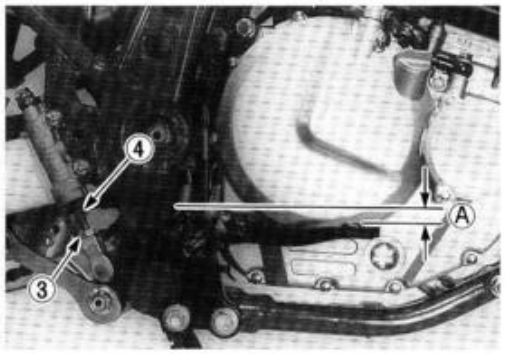

AIR BLEEDING THE BRAKE FLUID CIRCUIT

Air trapped in the fluid circuit acts like a cushion to absorb a large proportion of the pressure developed by the master cylinder and thus interferes with the full braking performance of the brake caliper. The presence of air is indicated by "sponginess" of the brake lever and also by lack of braking force. Considering the danger to which such trapped air exposes the machine and rider, it is essential that, after remounting the brake and restoring the brake system to the normal condition, the brake fluid circuit be purged of air in the following manner:

- Fill up the master cylinder reservoir to the "UPPER" line. Replace the reservoir cap to prevent entry of dirt.
- Attach a pipe to the caliper bleeder valve, and insert the free end of the pipe into a receptacle.

Air bleeder valve: 8 N·m (0.8 kg-m, 6.0 lb-ft)

- Front brake: Bleed the air from the air bleeder valve.
- Squeeze and release the brake lever several times in rapid succession and squeeze the lever fully without releasing it. Loosen the bleeder valve by turning it a quarter of a turn so that the brake fluid runs into the receptacle; this will remove the tension of the brake lever causing it to touch the handlebar grip. Then, close the valve, pump and squeeze the lever, and open the valve. Repeat this process until the fluid flowing into the receptacle no longer contains air bubbles.

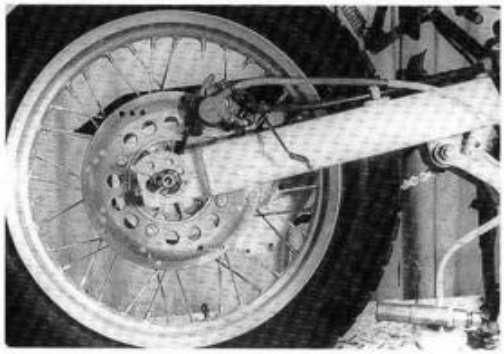

NOTE:
Replenish the brake fluid in the reservoir as necessary while bleeding the brake system. Make sure that there is always some fluid visible in the reservoir.

- Close the bleeder valve, and disconnect the pipe. Fill the reservoir with brake fluid to the "UPPER" end of the inspection window.

⚠ CAUTION

Handle brake fluid with care: the fluid reacts chemically with paint, plastics, rubber materials etc.

- The only difference between bleeding the front and rear brakes is that the rear master cylinder is actuated by a pedal.

TIRES

Inspect Every 6 000 km (4 000 miles, 12 months).

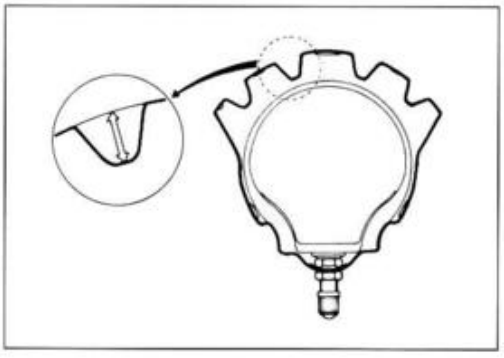

TIRE TREAD CONDITION

Operating the motorcycle with excessively worn tires will decrease riding stability and consequently invite a dangerous situation. It is highly recommended to replace a tire when the remaining depth of tire tread reaches the following specification.

Tire tread depth limit: FRONT & REAR 3.0 mm (0.12 in)

TIRE PRESSURE

If the tire pressure is too high or too low, steering will be adversely affected and tire wear increased. Therefore, maintain the correct tire pressure for good roadability or shorter tire life will result. Cold inflation tire pressure is as follows.

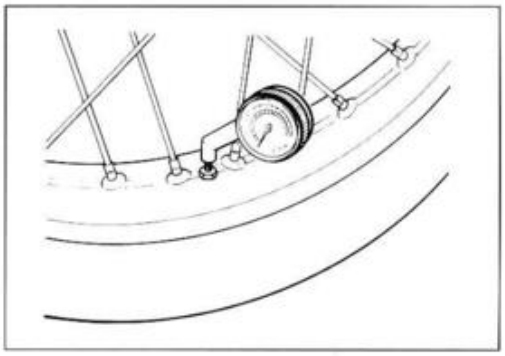

COLD INFLATION TIRE PRESSURE	SOLO RIDING			DUAL RIDING		
	kPa	kg/cm²	psi	kPa	kg/cm²	psi
FRONT	150	1.50	22	175	1.75	25
REAR	175	1.75	25	200	2.00	29

⚠ CAUTION

The standard tire fitted on this motorcycle is 90/90-21 54S for front and 120/90-17 64S for rear. The use of tires other than those specified may cause instability. It is highly recommended to use a SUZUKI Genuine Tire.

SPARK ARRESTER (For U.S.A. and CANADA)

Clean Every 6 000 km (4 000 miles).

If the muffler is clogged with carbon particles, exhaust resistance will be increased with a resultant decrease in power output.

- Remove the drain plugs.
- Start the engine and rev it to blow out the accumulated carbon particles.
- Turn off the engine and wait until the muffler cools, then replace the drain plugs and tighten them securely.

STEERING

Inspect Initially at 1 000 km (600 miles, 2 months) and Every 12 000 km (7 500 miles, 24 months) thereafter.

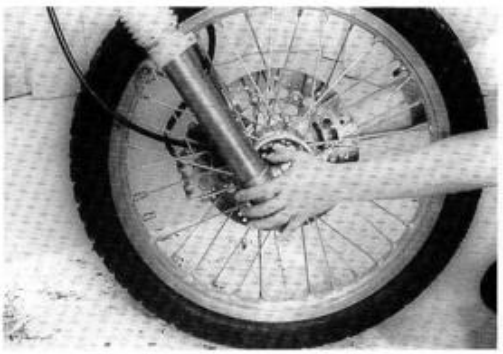

Taper roller type bearings are used on the steering system for better handling. Steering should be adjusted properly for smooth turning of handlebars and safe running. Overtight steering prevents smooth turning of the handlebars and too loose steering will cause poor stability. Check that there is no play in the front fork assembly by supporting the machine so that the front wheel is off the ground, with the wheel straight ahead, grasp the lower fork tubes near the axle and pull forward. If play is found, perform steering bearing adjustment as described in page 5-20 of this manual.

FRONT FORKS

Inspect Every 12 000 km (7 500 miles, 24 months).

Inspect the front forks for oil leakage, scoring or scratches on the outer surface of the inner tubes. Replace any defective parts, if necessary. (Refer to page 5-14.)

REAR SUSPENSION

Inspect Every 12 000 km (7 500 miles, 24 months).

Inspect the rear shock absorber for oil leakage and check that there is no play in the swingarm assembly.

EXHAUST PIPE AND MUFFLER BOLTS

Tighten Initially at 1 000 km (600 miles, 2 months) and Every 12 000 km (7 500 miles, 24 months) thereafter.

- Remove the right frame cover.
- Tighten the exhaust pipe bolts ①, muffler connection bolt ② and muffler bolts ③ to the specified torque.

Exhaust pipe bolt/Muffler connection bolt/ Muffler bolt: 26 N·m (2.6 kg-m, 19.0 lb-ft)

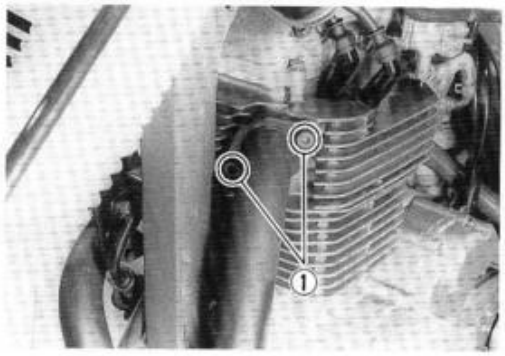

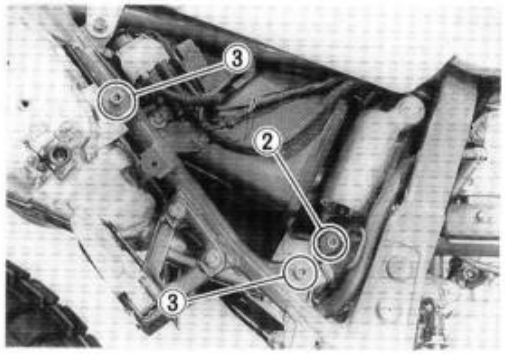

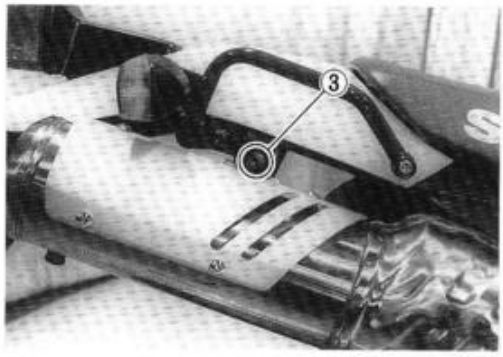

CHASSIS BOLTS AND NUTS

Tighten Initially at 1 000 km (600 miles, 2 months) and Every 6 000 km (4 000 miles, 12 months) thereafter.

Check that all chassis bolts and nuts are tightened to their specified torque. (Refer to page 2-16 for the locations of the following nuts and bolts on the motorcycle.)

Item	N·m	kg-m	lb-ft
① Steering stem head nut	90	9.0	65.0
② Front fork upper clamp bolt	29	2.9	21.0
③ Front fork lower clamp bolt	26	2.6	19.0
④ Front fork cap bolt	23	2.3	16.5
⑤ Front axle	65	6.5	47.0
⑥ Front axle holder nut	10	1.0	7.0
⑦ Handlebars clamp bolt	23	2.3	16.5
⑧ Front brake master cylinder mounting bolt	10	1.0	7.0
⑨ Front brake caliper mounting bolt	26	2.6	19.0
⑩ Front brake caliper pad mounting bolt	18	1.8	13.0
⑪ Brake hose union bolt (Front & Rear)	23	2.3	16.5
⑫ Air bleeder valve (Front & Rear)	8	0.8	6.0
⑬ Brake disc bolt (Front & Rear)	23	2.3	16.5
⑭ Rear brake caliper pad mounting bolt	18	1.8	13.0
⑮ Rear brake master cylinder mounting bolt	10	1.0	7.0
⑯ Rear brake master cylinder rod lock nut	18	1.8	13.0
⑰ Front footrest bracket mounting bolt	39	3.9	28.0
⑱ Rear footrest bracket mounting bolt	23	2.3	16.5
⑲ Swingarm pivot nut	77	7.7	55.5
⑳ Rear shock absorber mounting bolt (Upper & Lower)	55	5.5	40.0
㉑ Rear cushion lever/rod mounting nut	100	10.0	72.5
㉒ Rear cushion lever mounting bolt	80	8.0	58.0
㉓ Rear axle nut (with cotter pin)	100	10.0	72.5
㉔ Rear axle nut (Self-locking)	110	11.0	79.5
㉕ Rear sprocket nut/bolt	27	2.7	19.5

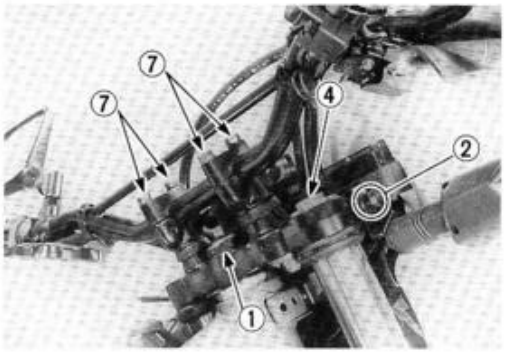
7
7
4
2
1

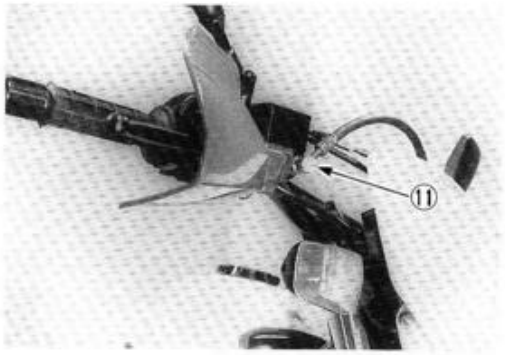
11

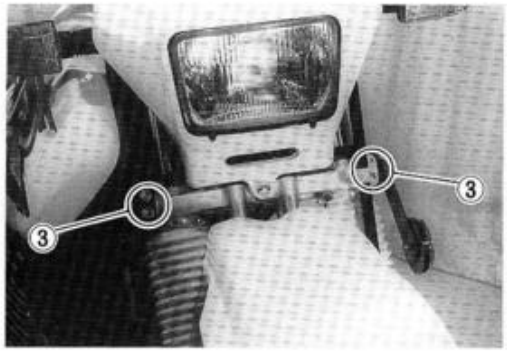
3
3

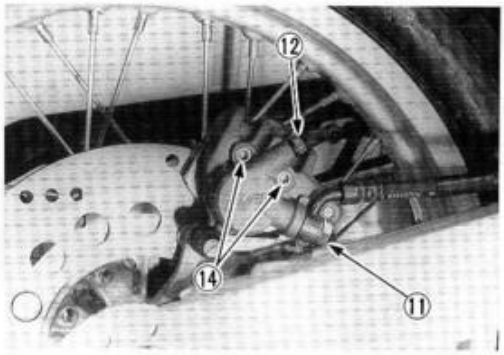
12
14
11

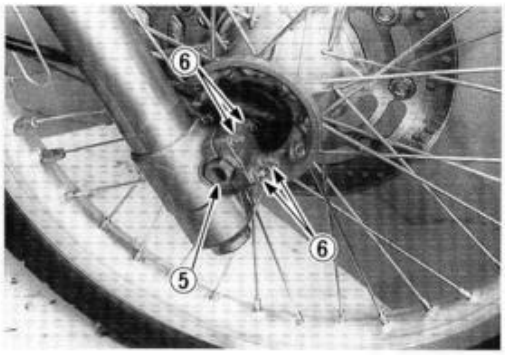
6
5
6

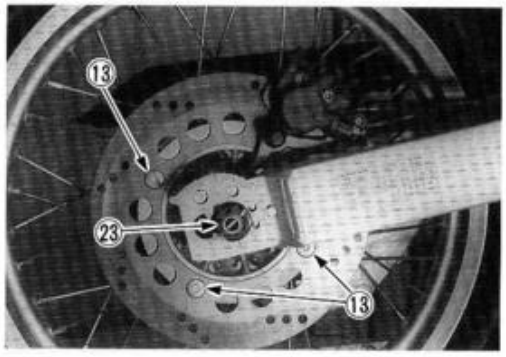
18
23
13

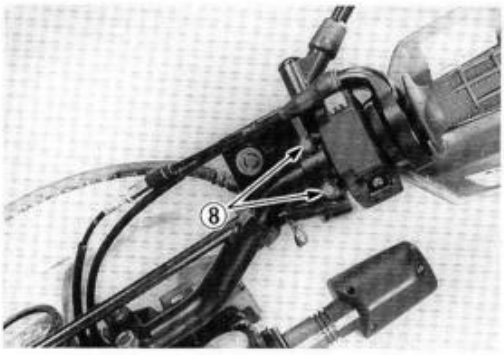
8

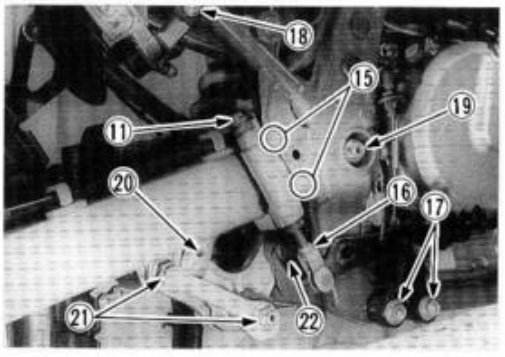
18
15
19
11
20
16
17
21
22

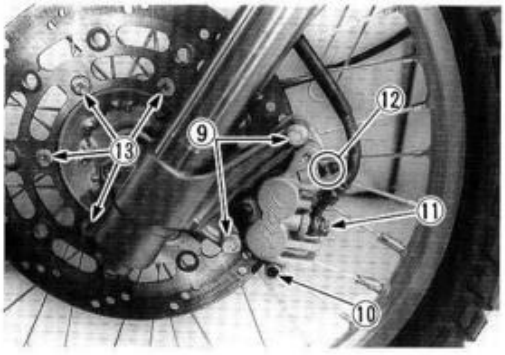
12
9
13
11
10

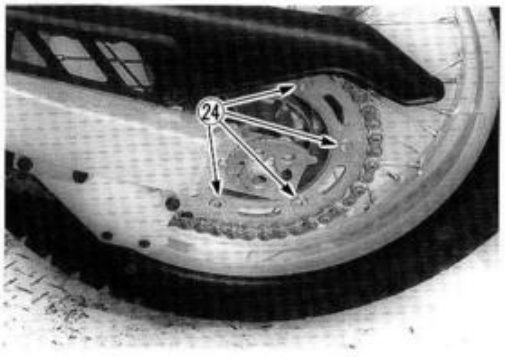
24

COMPRESSION PRESSURE CHECK

The compression of a cylinder is a good indicator of its internal condition.
The decision to overhaul the cylinder is often based on the results of a compression test. Periodic maintenance records kept at your dealership should include compression readings for each maintenance service.

COMPRESSION PRESSURE SPECIFICATION

Standard
850 kPa Approx. (8.5 kg/cm² 120 psi)

Low compression pressure can indicate any of the following conditions:

* Excessively worn cylinder wall
* Worn-down piston or piston rings
* Piston rings stuck in grooves
* Poor seating of valves
* Ruptured or otherwise defective cylinder head gasket

COMPRESSION TEST PROCEDURE

NOTE:

* *Before testing the engine for compression pressure, make sure that the cylinder head bolts are tightened to the specified torque values and valves are properly adjusted.*
* *Have the engine warmed up by idling before testing.*
* *Be sure that the battery used is in fully-charged condition.*

Remove the parts concerned and test the compression pressure in the following manner.

- Remove the spark plug.
- Fit the compression gauge in the plug hole, while taking care that the connection tight.
- Keep the throttle grip in full-open position.
- While cranking the engine a few seconds with the starter, and record the maximum gauge reading as the compression of that cylinder.

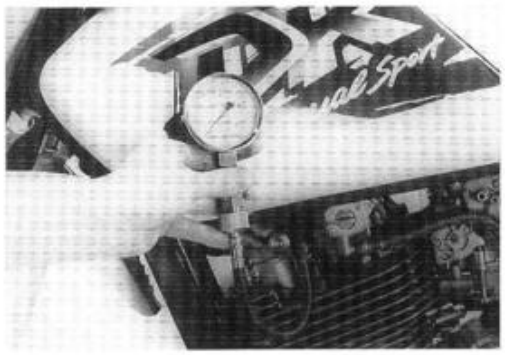

TOOL **09915-64510: Compression gauge**
09915-63310: Adaptor

OIL PRESSURE CHECK

Check periodically the oil pressure in the engine to judge roughly the condition of the moving parts.

OIL PRESSURE SPECIFICATION

Above 30 kPa (0.3 kg/cm², 4.3 psi) **Below 70 kPa (0.7 kg/cm², 10 psi)**	**at 3 000 r/min., Oil temp. at 60°C (140°F)**

If the oil pressure is lower or higher than the specification, the following causes may be considered.

LOW OIL PRESSURE

* Oil leakage from the oil passage way
* Damaged O-ring
* Defective oil pump
* Combination of above items

HIGH OIL PRESSURE

* Used a engine oil which is too high viscosity
* Clogged oil passage way
* Combination of above items

OIL PRESSURE TEST PROCEDURE

Check the oil pressure in the following manner.

- Remove the oil pressure inspection plug.
- Install the oil pressure gauge in the position shown in the figure.
- Warm up the engine as follows:
  Summer 10 min. at 2 000 r/min.
  Winter 20 min. at 2 000 r/min.
- After warming up, increase the engine speed to 3 000 r/min. (with the engine tachometer), and read the oil pressure gauge.

TOOL 09915-74510: Oil pressure gauge
09900-26006: Tachometer

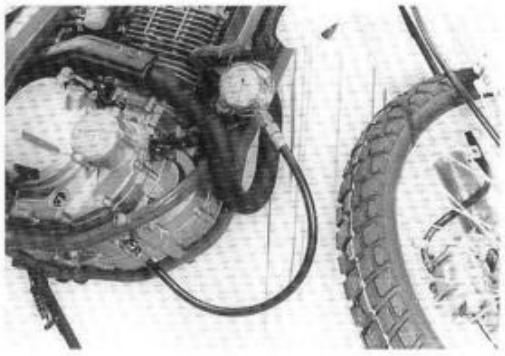

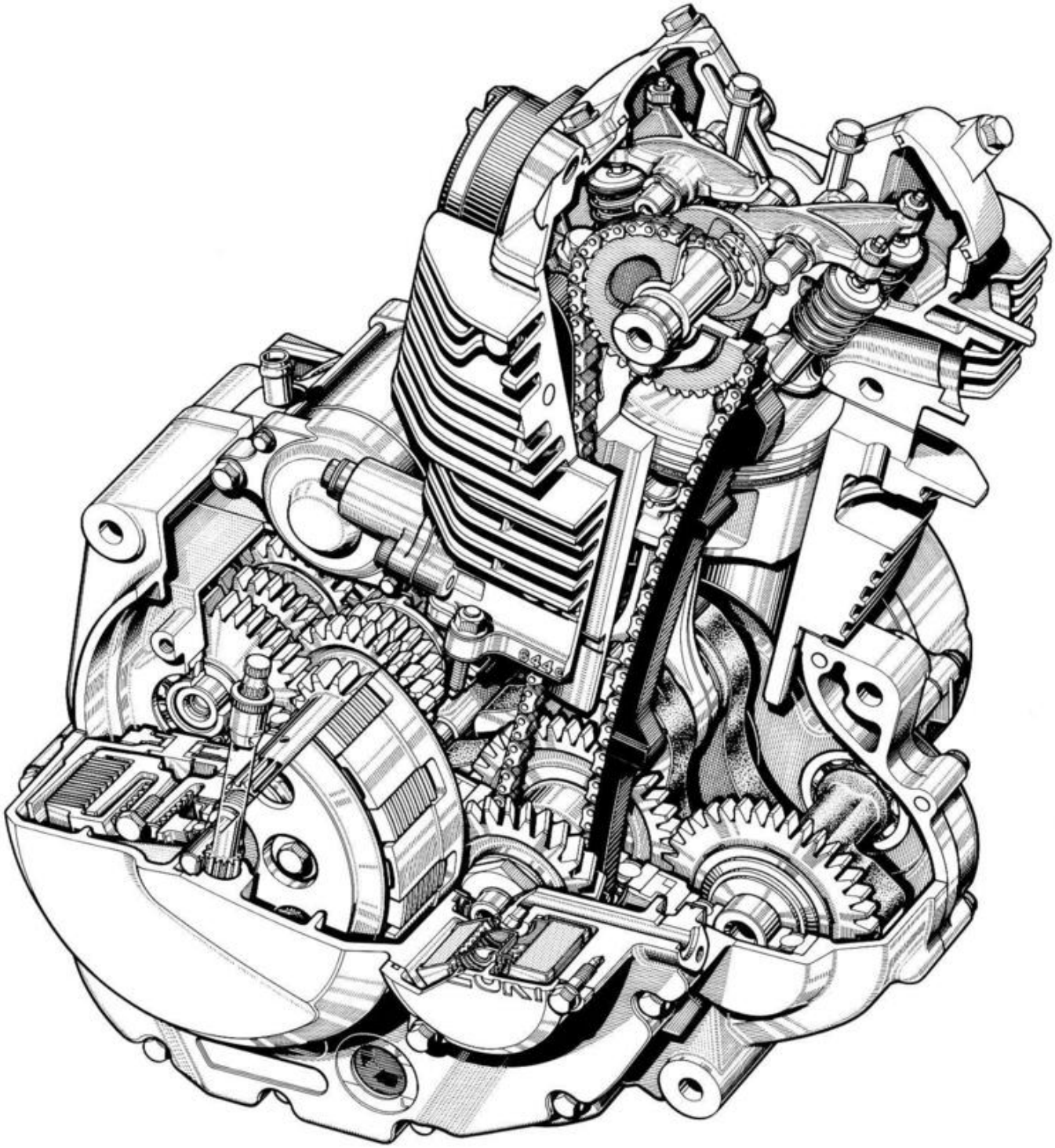

ENGINE

3

CONTENTS

ENGINE COMPONENTS REMOVABLE WITH THE ENGINE IN PLACE 3- 1
ENGINE REMOVAL AND REINSTALLATION 3- 2
ENGINE REMOVAL 3- 2
ENGINE REINSTALLATION 3- 6
ENGINE DISASSEMBLY 3- 9
ENGINE COMPONENTS INSPECTION AND SERVICE 3-17
CYLINDER HEAD COVER 3-17
ROCKER ARM 3-18
CYLINDER HEAD 3-19
VALVE 3-20
CAMSHAFT/AUTOMATIC DE-COMP. ASSEMBLY 3-25
CYLINDER 3-27
PISTON 3-27
PISTON RING 3-28
CONROD 3-29
CRANKSHAFT 3-30
BALANCERSHAFT AND GEAR 3-31
CLUTCH 3-32
STARTER CLUTCH 3-34
TRANSMISSION 3-36
OIL NOZZLE AND OIL JET 3-40
CRANKCASE BEARINGS 3-40
OIL FILTER 3-41
GENERATOR 3-41
ENGINE REASSEMBLY 3-42

ENGINE COMPONENTS REMOVABLE WITH THE ENGINE IN PLACE

The parts listed below can be removed and reinstalled without removing the engine from the frame. Refer to the page listed in each section for removal and reinstallation instructions.

ENGINE CENTER

	Refet to page
Cam drive chain tensioner	3- 9 and 57
Cylinder head cover	3-10 and 56
Camshaft/auto-decompression	3-10 and 55
Cylinder head	3-10 and 54
Cylinder	3-11 and 54
Piston	3-11 and 53
Starter motor	3-11 and 52
Cam drive chain	3-14 and 48

ENGINE LEFT SIDE

	Refer to page
Engine sprocket	3- 5 and 7
Generator cover	3- 9 and 52
Starter torque limiter	3-11 and 52
Starter idle gear	3-11 and 52
Generator rotor	3-11 and 51
Starter clutch	3-34 and 35
Starter gear	3-12 and 51
Gearshift shaft	3-13 and 47
Gearshift cam pawl and cam driven gear	3-13 and 46

ENGINE RIGHT SIDE

	Refer to page
Clutch cover	3-13 and 50
Clutch	3-13 and 49
Primary driven gear	3-14 and 49
Primary drive gear	3-14 and 48
Oil pump driven gear	3-14 and 48
Oil pump assembly	3-14 and 48
Neutral position indicator switch	3-14 and 47
Oil filter	3-41

ENGINE REMOVAL AND REINSTALLATION

ENGINE REMOVAL

Before taking the engine out of the frame, thoroughly clean the engine with a suitable cleaner. The procedure of engine removal is sequentially explained in the following steps:

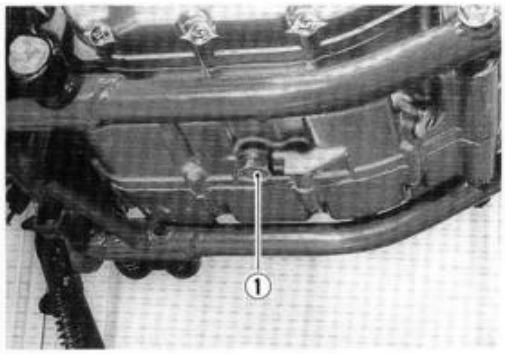

- Remove the oil drain plug ① to drain out engine oil.
- Remove the frame covers. (Refer to page 5-1.)
- Remove the seat. (Refer to page 5-1.)

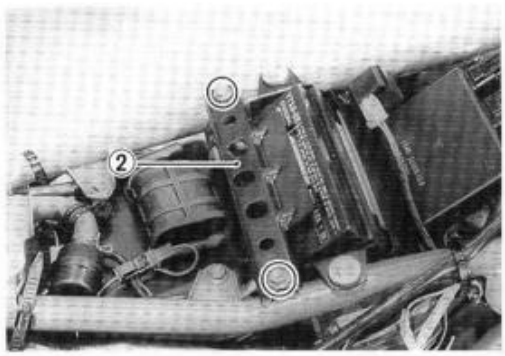

- Remove the battery holder plate ②.

- Disconnect the battery ⊖ lead wire ③ from the battery terminal.
- Remove the fuel tank. (Refer to page 4-3.)

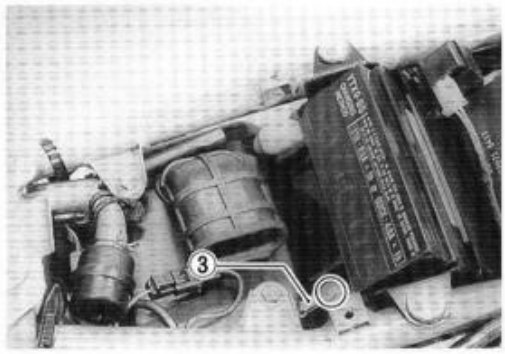

- Remove the oil cooler hose mounting bolts.

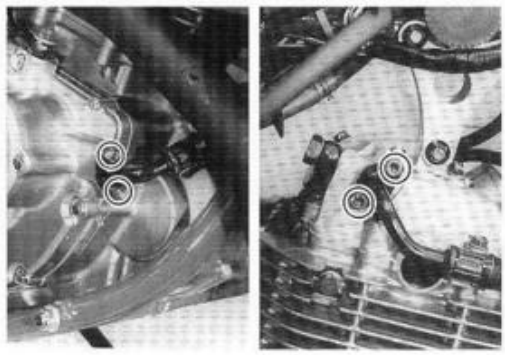

- Remove the oil cooler holder with cooler by removing the mounting bolts.

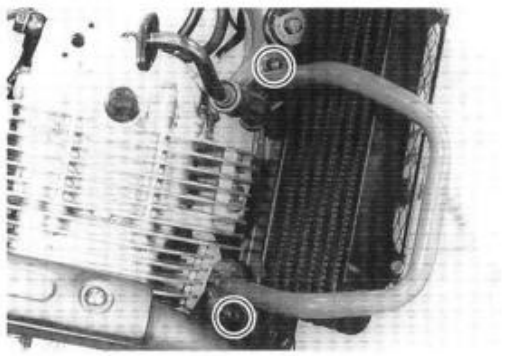

- Remove the exhaust pipe bolts.

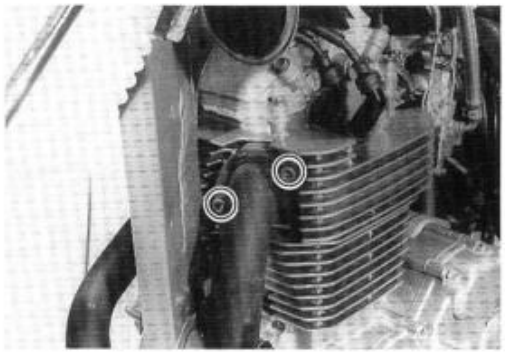

- Remove the exhaust pipe by loosening the connection bolt.

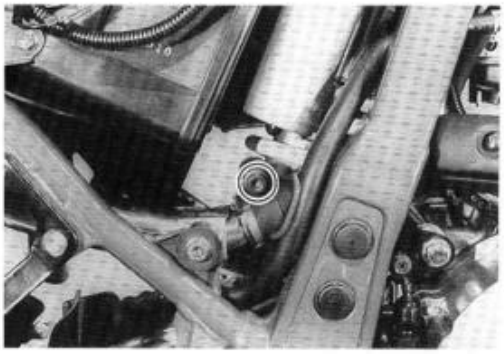

- Disconnect the pick-up coil/power source coil lead wire coupler ①.

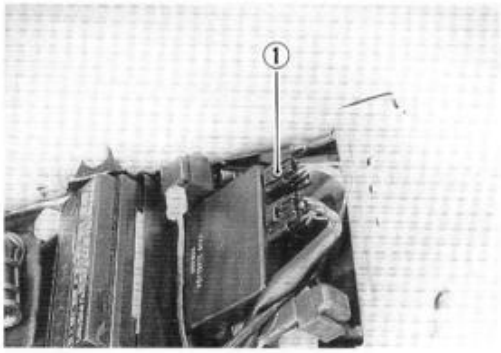

- Disconnect the generator coil and neutral position indicator switch lead wires.

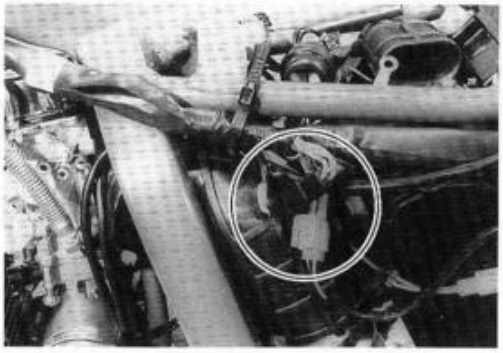

- Disconnect the spark plug caps.

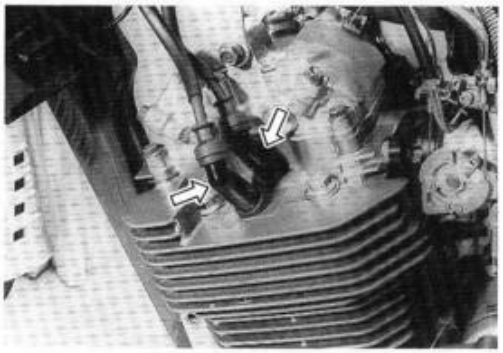

- Disconnect the throttle cables and starter (choke) cable.
- Disconnect the air vent hose.

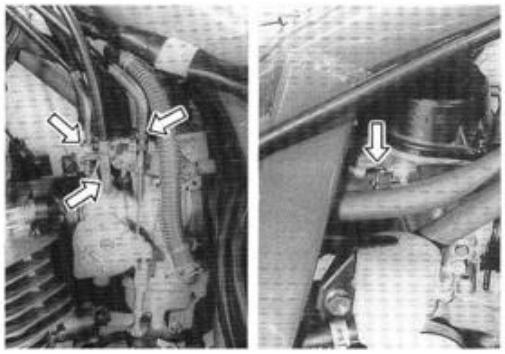

- Remove the carburetor by loosening the mounting clamp screws.

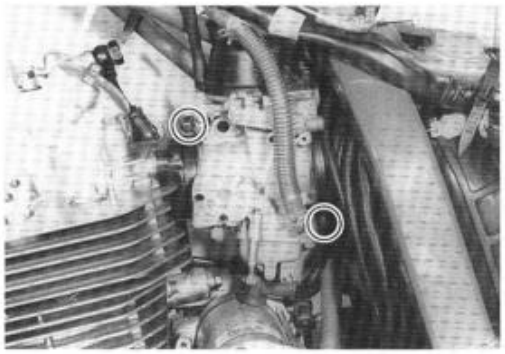

- Disconnect the clutch cable by removing the cable lever.

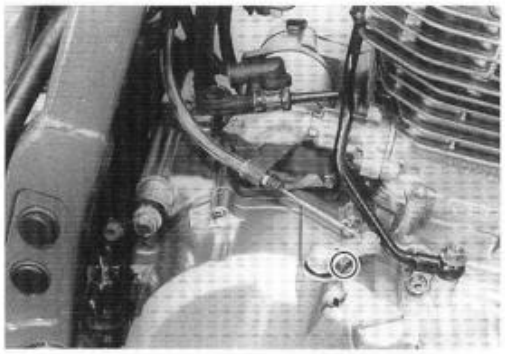

- Disconnect the starter motor lead wire ① and crankcase breather hose ②.

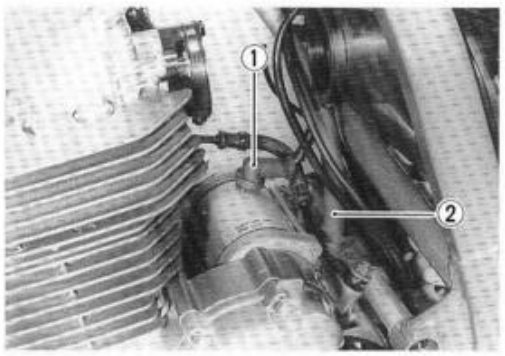

- Remove the left front footrest ③.
- Remove the engine sprocket cover ④ and gearshift lever ⑤.

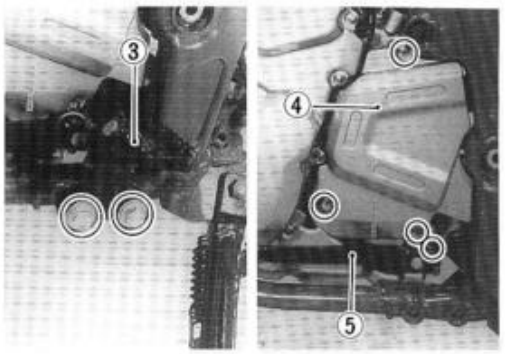

- Remove the engine sprocket bolts while depressing the rear brake pedal.
- Remove the engine sprocket.

NOTE:
If it is difficult to remove the engine sprocket, loosen the rear axle nut and then adjust the chain adjusters to provide additional chain slack.

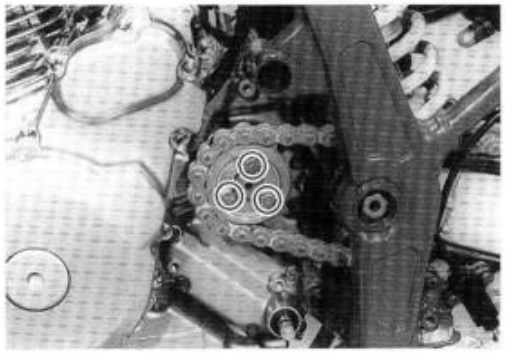

- Remove the engine ground wire and lead wire clamp.

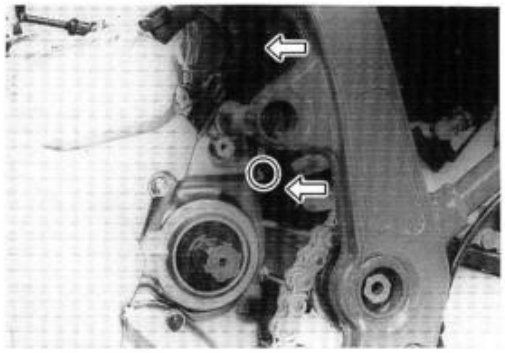

- Remove the engine mounting nuts, bolts, spacers and brackets.

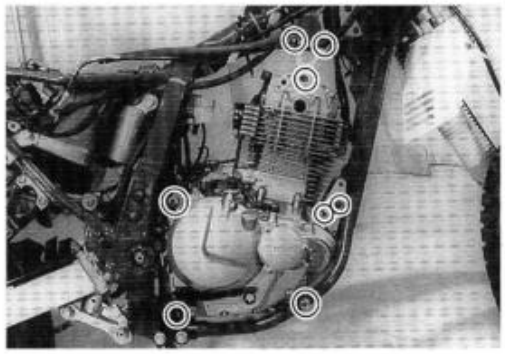

- Remove the engine through the left side of the frame.

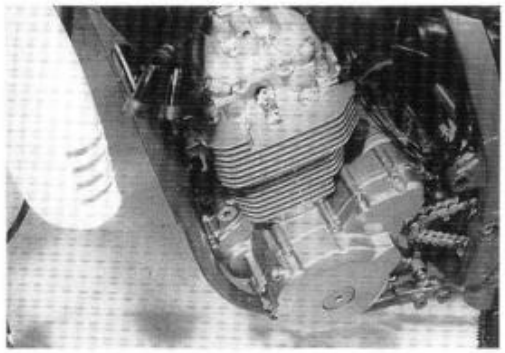

ENGINE REINSTALLATION

Reinstall the engine in the reverse order of engine removal.

- Insert the two long bolts from left side. Install the brackets, spacers, bolts and nuts properly, as shown in the following illustration.

NOTE:

The engine mounting nuts are self-locking. Once the nut has been removed, it is no longer of any use. Be sure to use new nuts and tighten them to the specified torque.

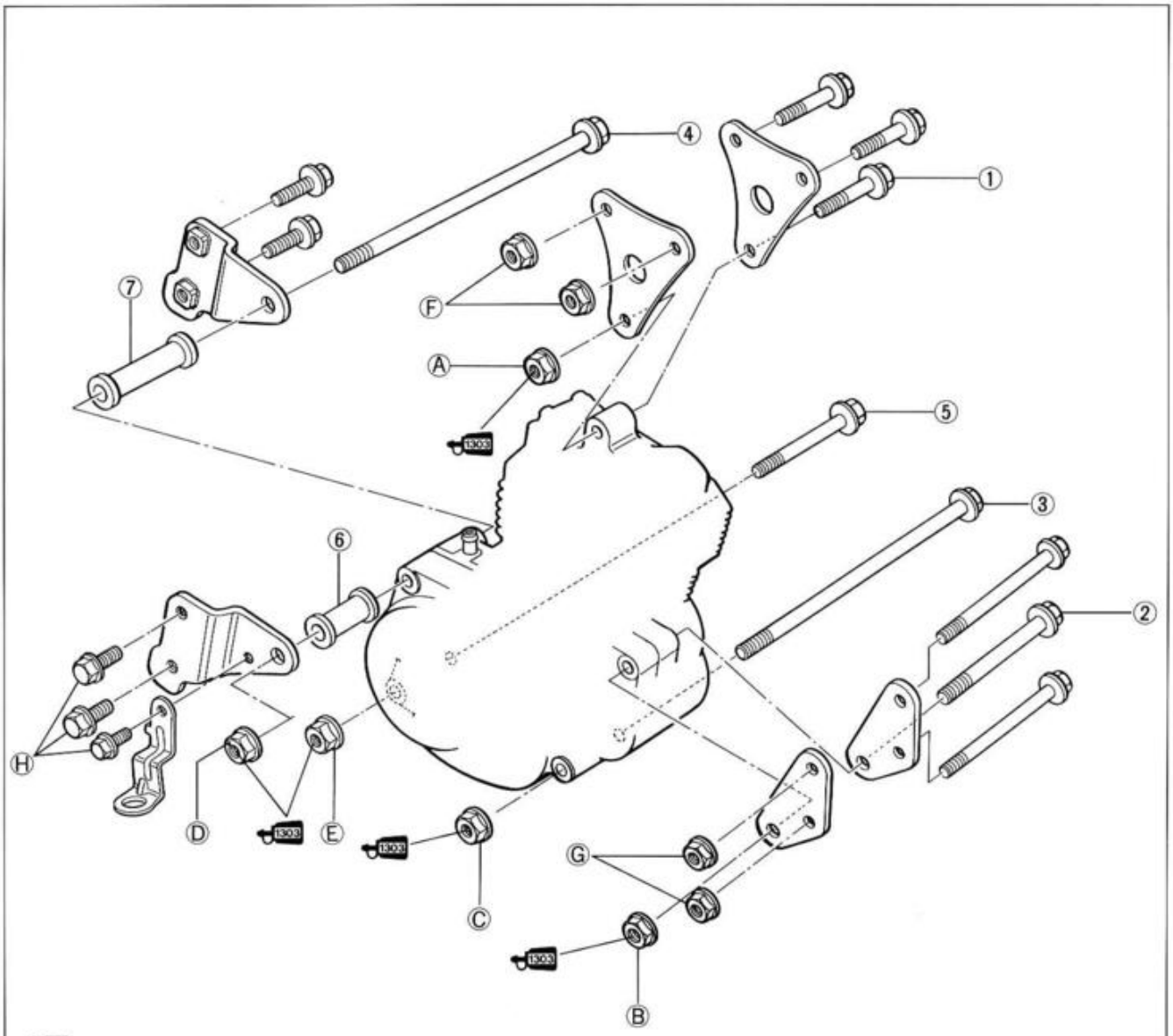

ITEM	N·m	kg-m	lb-ft
Ⓐ	40	4.0	29.0
ⒷⒸⒹⒺ	65	6.5	47.0
ⒻⒼ	40	4.0	29.0
Ⓗ	23	2.3	16.5

LENGTH

Bolt ①	53 mm (2.1 in)
Bolt ②	100 mm (3.9 in)
Bolt ③	235 mm (9.3 in)
Bolt ④	235 mm (9.3 in)
Bolt ⑤	130 mm (5.1 in)
Spacer ⑥	27 mm (1.1 in)
Spacer ⑦	65 mm (2.6 in)

- Apply THREAD LOCK SUPER "1303" to the engine sprocket mounting bolts and tighten them to the specified torque.

1303 99000-32030: THREAD LOCK SUPER "1303"

Engine sprocket bolt: 6 N·m (0.6 kg-m, 4.5 lb-ft)

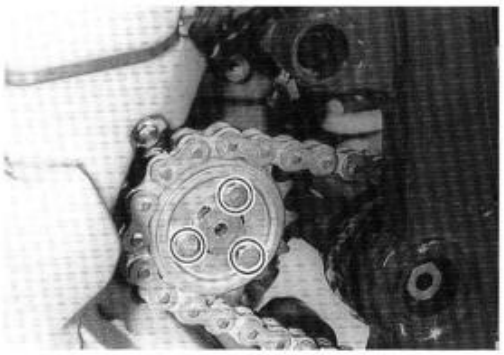

- Install the oil cooler hoses to the clutch cover and cylinder head correctly.

⚠ CAUTION

Replace the O-rings ① with new one to prevent oil leakage.

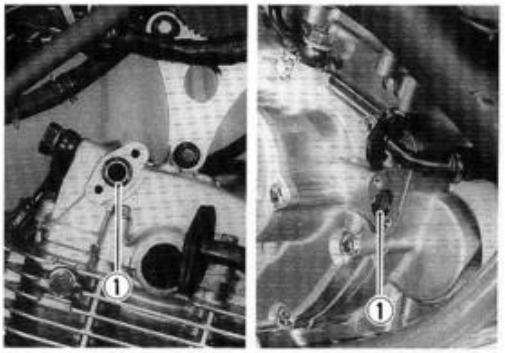

- Tighten the oil cooler hose securing bolts to the specified torque.

Oil cooler hose bolt: 10 N·m (1.0 kg-m, 7.0 lb-ft)

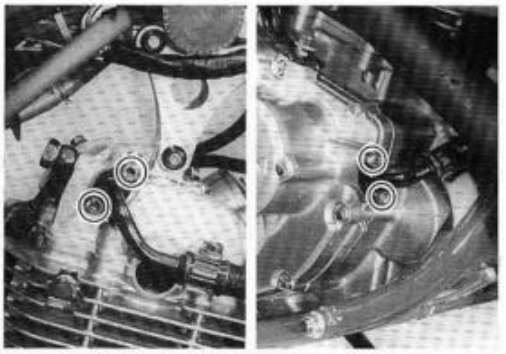

- Tighten the front footrest bolts to the specified torque.

Front footrest bolt: 39 N·m (3.9 kg-m, 28.0 lb-ft)

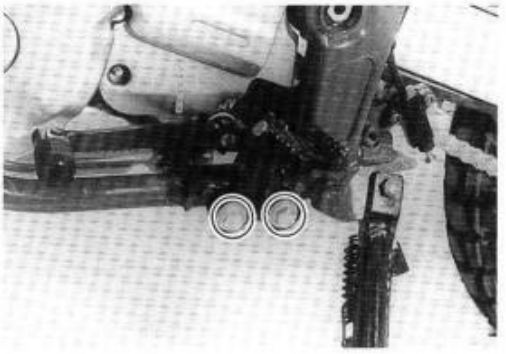

- After remounting the engine, route the wiring harnesses, cables and hoses properly by referring to the sections, for wire routing, cable routing and hose routing. (Refer to pages 7-12 through 7-18.)

- Adjust the following items to the specification.
  * Throttle cable play ..... (Refer to page 2-6.)
  * Idling adjustment ..... (Refer to page 2-6.)
  * Clutch cable play ..... (Refer to page 2-7.)
  * Drive chain slack ..... (Refer to page 2-9.)

- Pour 2.6 L (2.7/2.3 US/Imp qt) of engine oil SAE 10W/40 graded SE, SF or SG into the engine after overhauling engine.
* Start up the engine and allow it run for several minutes at idle speed. About five minutes after stopping engine, check oil level.
  If the level is below the "F" mark, add oil until the level reaches the "F" mark.

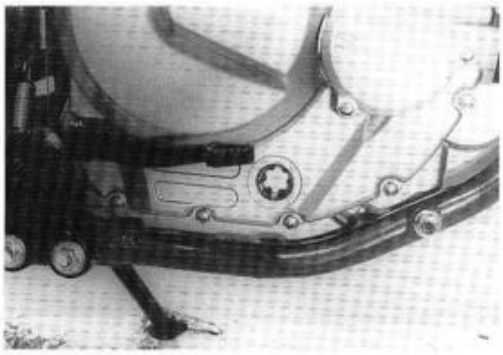

Change	2 300 ml (2.4/2.0 US/Imp qt)
Filter change	2 400 ml (2.5/2.1 US/Imp qt)
Overhaul	2 600 ml (2.7/2.3 US/Imp qt)

ENGINE DISASSEMBLY

- Remove the oil pipe by removing the mounting bolts.

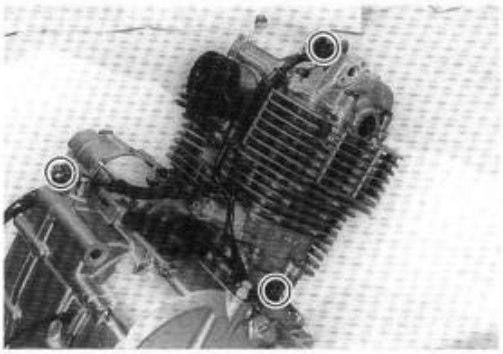

- Remove the cam drive chain tensioner by removing the bolts.

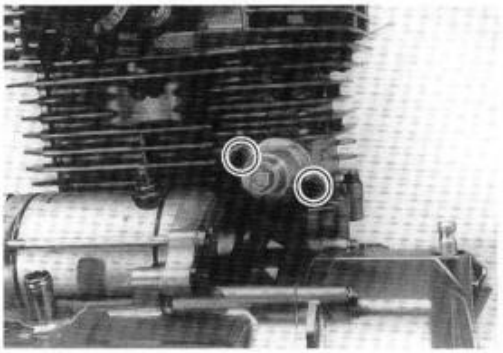

- Remove the two spark plugs.

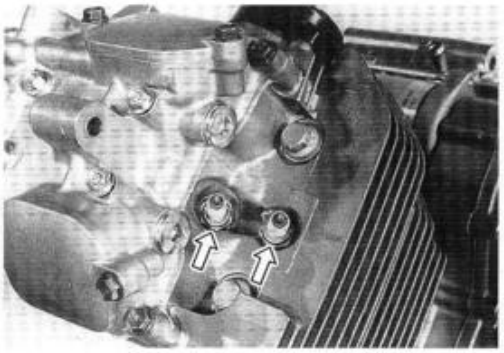

- Remove the generator cover by removing the bolts.

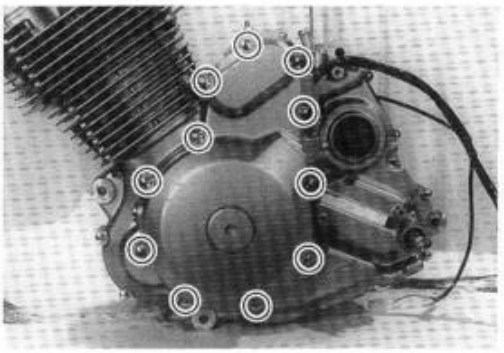

NOTE:
When removing the cylinder head cover, the piston must be at top dead center on the compression stroke.
Align "TOP" line ① on the generator rotor with index mark ② on the crankcase.

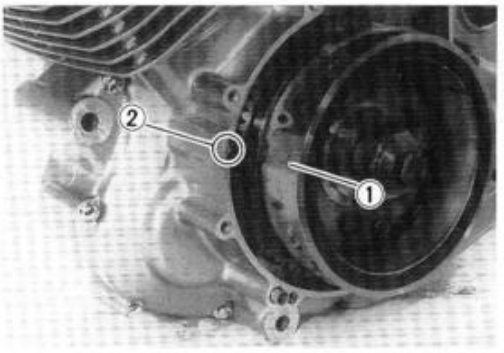

- Remove the valve inspection caps (Intake and Exhaust) by removing the bolts.

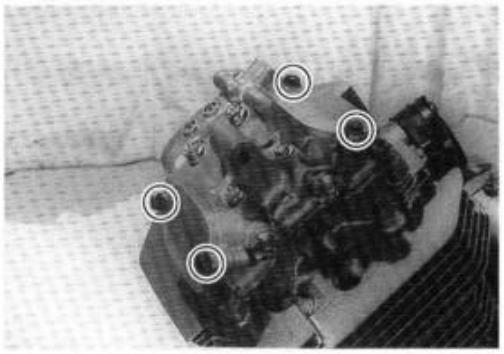

- Loosen the cylinder head cover bolts in the ascending order numbers and remove the cylinder head cover.

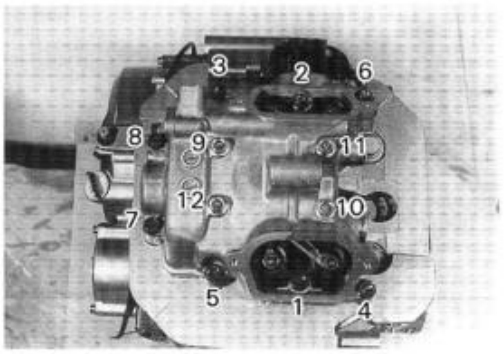

- Flatten the lock washer and remove the camshaft sprocket bolts.
- Remove the sprocket and camshaft/auto-decompression assembly.

NOTE:
The cam chain tensioner bolt ① is to be removed only when disassembling the engine.

⚠ CAUTION

Do not drop camshaft drive chain, pin, C-ring or sprocket into the crankcase.

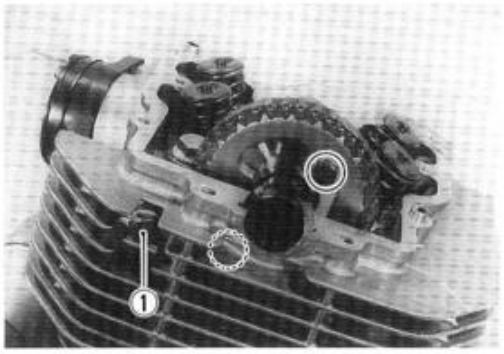

- Remove the cylinder head by removing the bolts and nuts diagonally.

NOTE:
If it is difficult to remove the cylinder head, gently pry it off while tapping the finless portion of the cylinder head with a plastic hammer. Be careful not to break the fins.

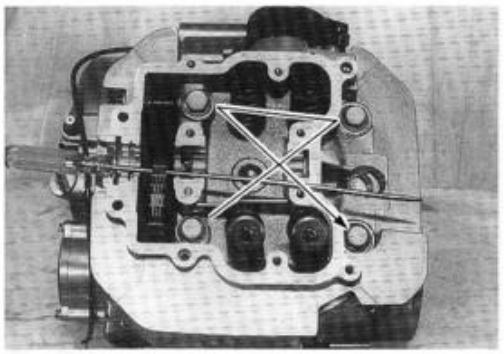

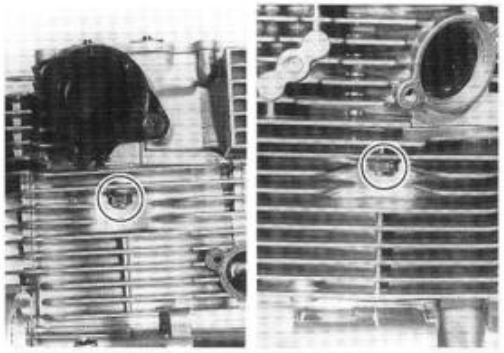

- Remove the cylinder by removing the nuts.

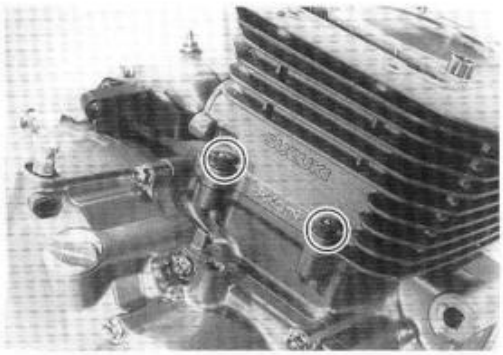

⚠ CAUTION

If tapping with a plastic hammer is necessary, do not break the fins.

- Place a clean rag over the cylinder base to prevent the piston pin circlips from dropping into crankcase. Remove the piston pin circlips with a long-nose pliers.
- Remove the piston by removing the piston pin.

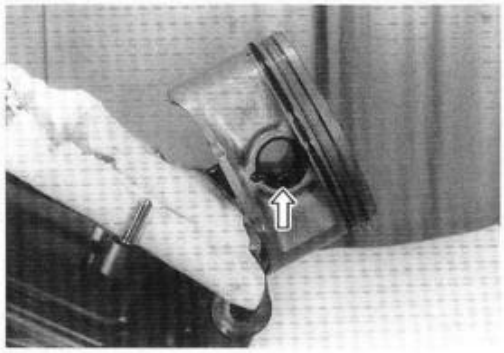

- Remove the clutch cable holder and starter motor.

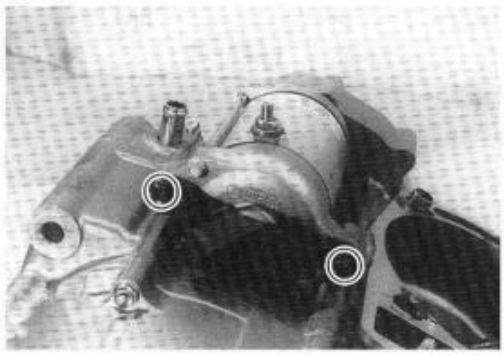

- Remove the starter torque limiter ① and starter idle gear ② with shaft.

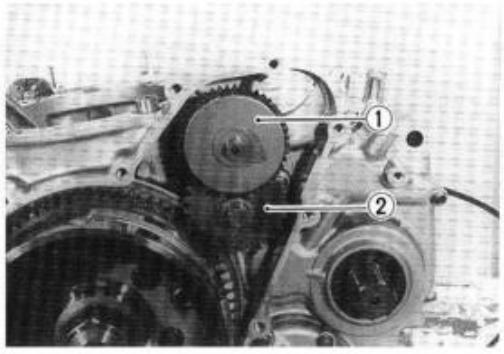

- Loosen the generator rotor bolt with the 36 mm offset wrench.

NOTE:
Do not remove the generator rotor bolt after loosening the bolt. The generator rotor bolt is used in conjunction with the rotor remover, when removing the generator rotor.

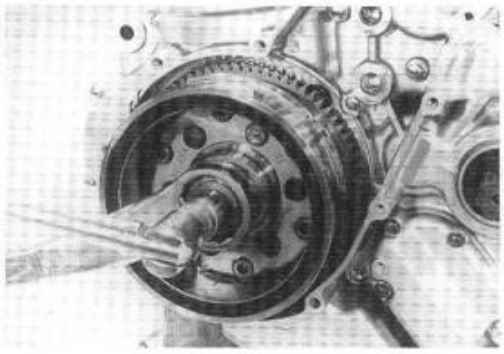

- Remove the generator rotor with the special tool.

TOOL **09930-33720: Rotor remover**

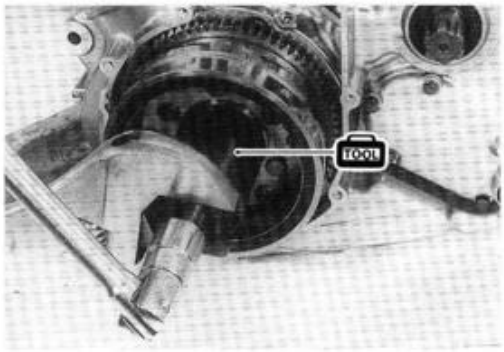

- Remove the key ①.
- Remove the starter gear ②.
- Remove the thrust washer ③.

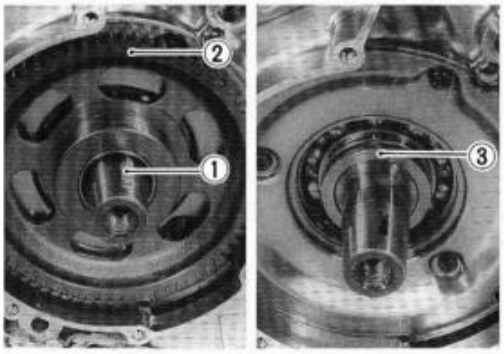

- Remove the ring nut with the special tools, then remove the spacer.

TOOL **09917-23711: Ring nut socket wrench**
09910-20116: Conrod holder

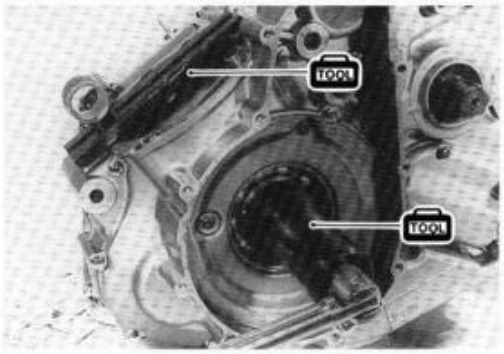

- Remove the crankcase oil separator ④ by removing the screws.
- Remove the spacer ⑤.

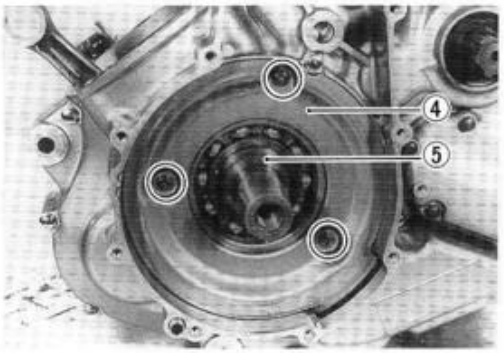

- Remove the gearshift cover by removing the bolts.

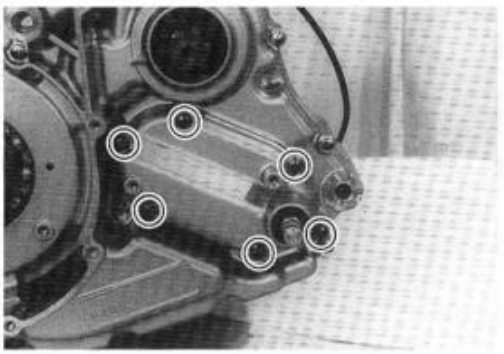

- Extract the gearshift shaft ① and remove the cam driven gear ② by removing the screws ③.

NOTE:
When removing the cam driven gear, do not lose gearshift pawl ④, pin ⑤ and spring ⑥.

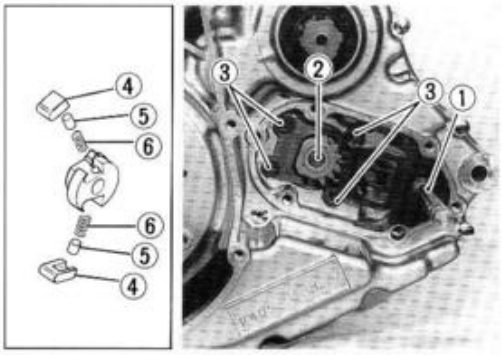

- Remove the clutch cover by removing the bolts.

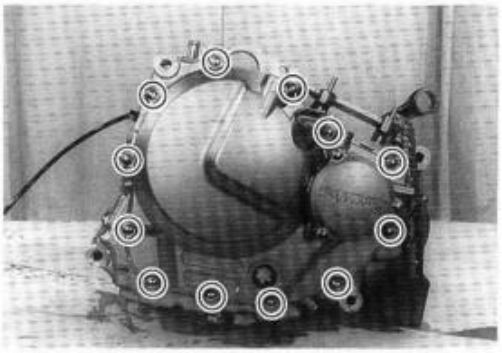

- Remove the clutch pressure plate by removing the bolts diagonally.

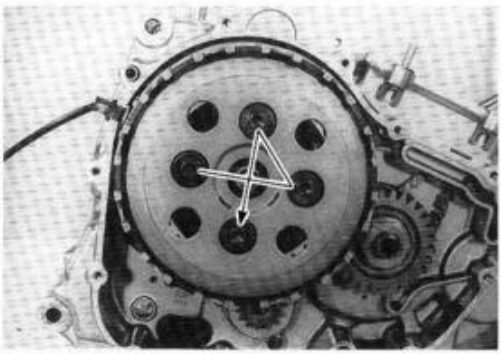

- Remove the clutch drive and driven plates.

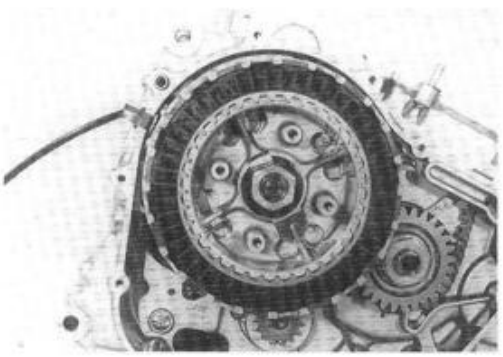

- Flatten the lock washer and remove the clutch sleeve hub nut with the special tool.

TOOL 09920-53740: Clutch sleeve hub holder

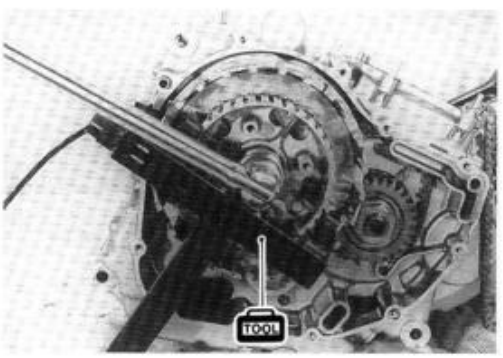

- Remove the thrust washer ① and primary driven gear assembly.
- Remove the thrust washer ②.

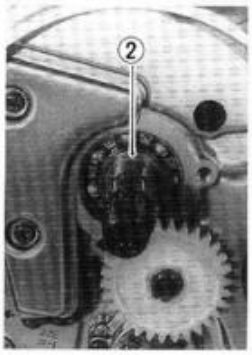

- Remove the primary drive gear nut with the special tool.

TOOL 09910-20116: Conrod holder

⚠ CAUTION

This nut has left-hand thread nut.

- Remove the cam drive chain ③ and key ④.

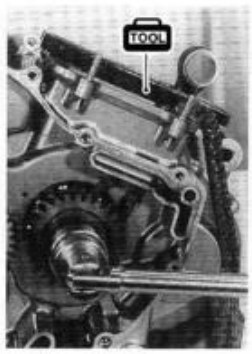
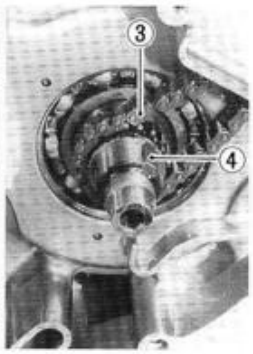

- Remove the idle gear and oil pump driven gear by removing the circlips.

TOOL 09900-06107: Snap ring pliers

- Remove the oil pump by removing the mounting screws.

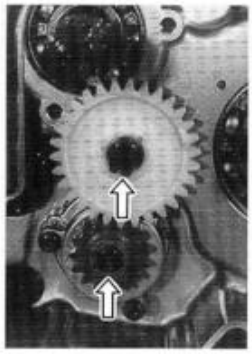
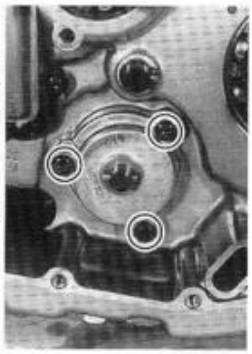

- Remove the breather cover.

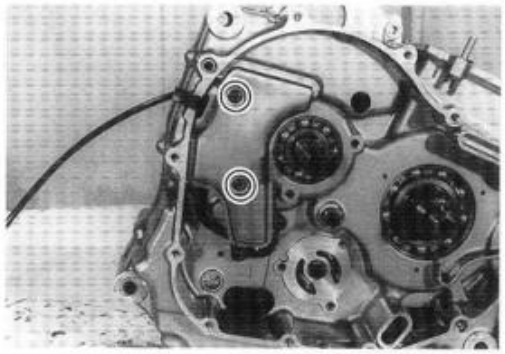

- Remove the neutral position indicator switch.

NOTE:
Do not loose the switch contact ⑤ and spring ⑥.

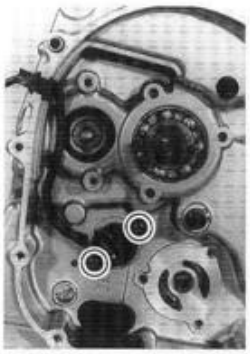

- Remove the crancase securing bolts.
- Separate the crankcase into 2 parts, right and left with the crankcase separating tools.

TOOL 09920-13120: Crankcase separating tool
09910-33210: Crankshaft installer attachment

NOTE:
Fit the crankcase separating tool, so that the tool plate is parallel with the end face of the crankcase.

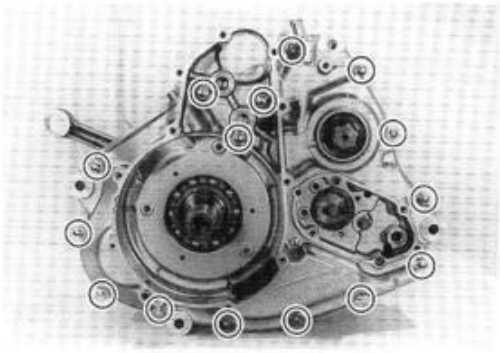

⚠ CAUTION

The crankshaft and transmission components must remain in the right crankcase half. This is necessary because the gearshift cam stopper is mounted on the right crankcase half and will be damaged if the transmission components remain in the left half.

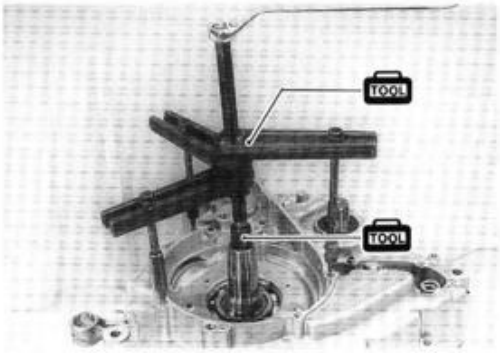

- Remove the gearshift cam stopper.

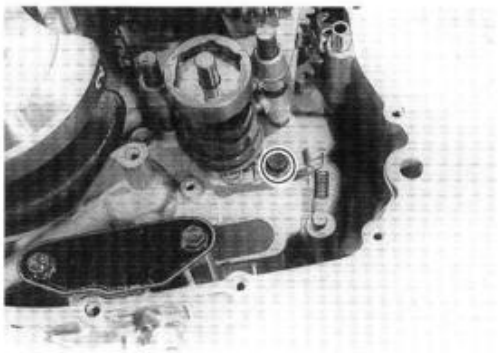

- Remove the gearshift fork shafts and gearshift forks.
- Remove the gearshift cam.

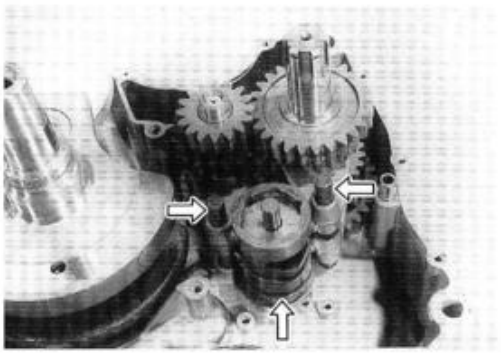

- Remove the driveshaft assembly and countershaft assembly.

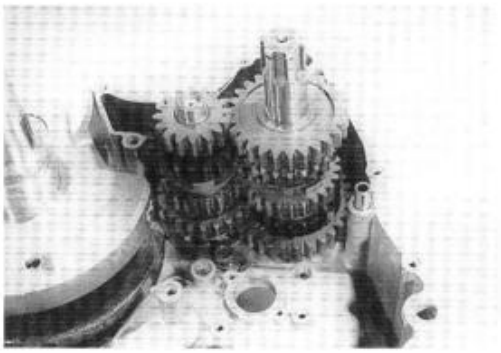

- Align the punched marks on the balancer drive gear and driven gear.
- Remove the balancershaft assembly.

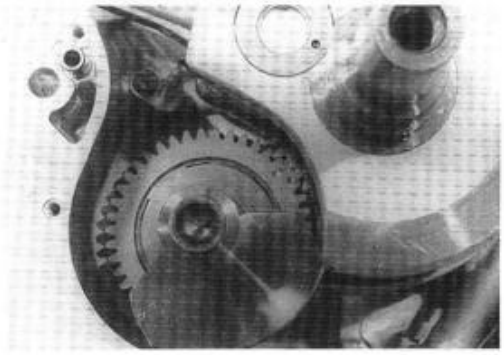

- Remove the crankshaft from the crankcase by using a crankshaft remover.

TOOL 09920-13120: Crankshaft remover (Crankcase separating tool)

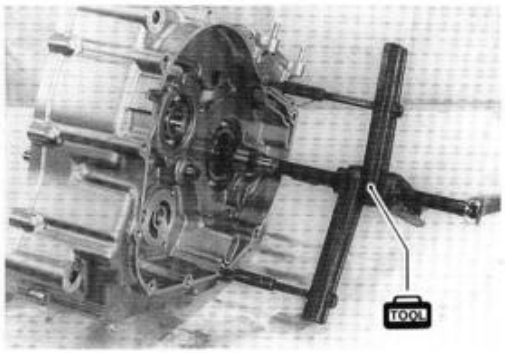

- Remove the oil sump filter cover ① by removing the bolts.
- Remove the oil sump filter ②.

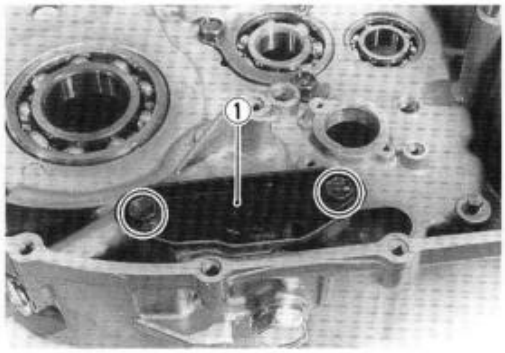

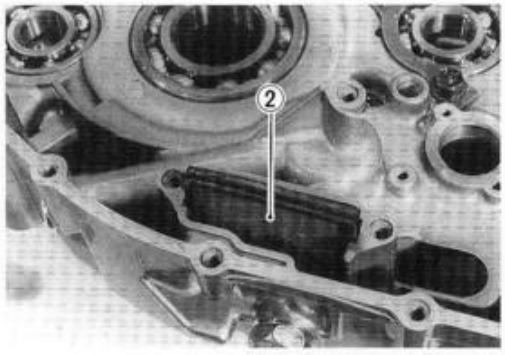

ENGINE COMPONENTS INSPECTION AND SERVICE

CYLINDER HEAD COVER SERVICE

⚠ CAUTION

Be sure to identify each removed part as to its location, and lay the parts out in groups designated as "Exhaust", "Inlet", so that each will be restored to the original location during assembly.

- Remove the intake and exhaust rocker arm shaft set bolts.

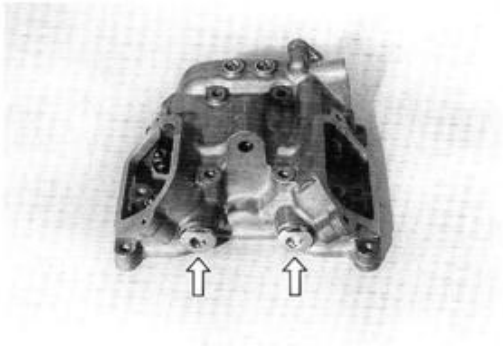

- Remove the intake and exhaust rocker arm shafts with a 6 mm bolt.

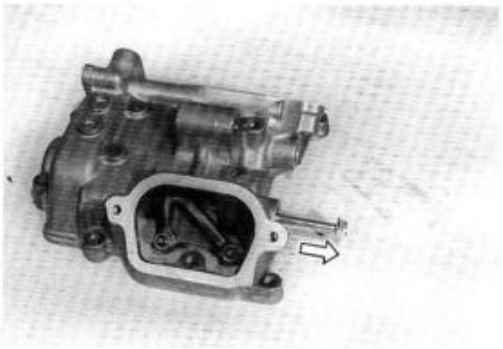

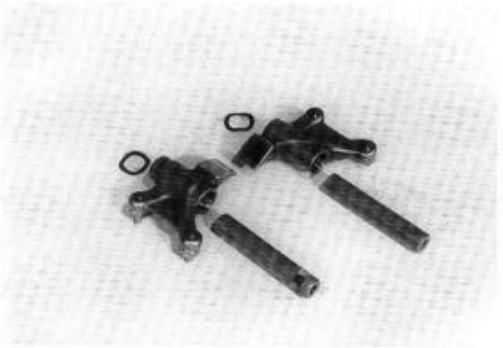

CYLINDER HEAD COVER DISTORTION

After removing sealant from the fitting surface of the cylinder head cover, place the cylinder head cover on a surface plate and check for distortion with a thickness gauge.

Service Limit: 0.05 mm (0.002 in)

If the distortion exceeds the limit, replace the cylinder head cover.

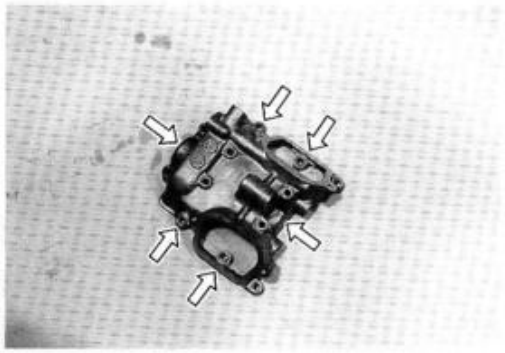

ROCKER ARM SHAFT O.D.

Measure the diameter of rocker arm shaft with a micrometer.

Standard: 11.973—11.984 mm (0.4714—0.4718 in)

TOOL 09900-20205: Micrometer (0—25 mm)

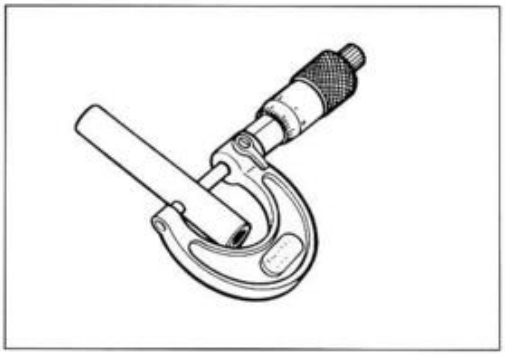

ROCKER ARM I.D.

When checking the rocker arm, the inside diameter of the rocker arm and wear of the camshaft contacting surface should be checked.

Standard: 12.000—12.018 mm (0.4724—0.4731 in)

TOOL 09900-20605: Dial calipers

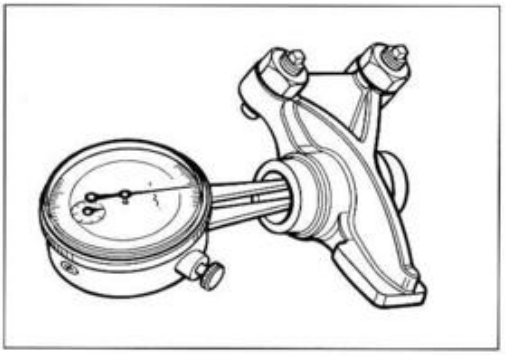

ROCKER ARM AND SHAFT REASSEMBLY

- Apply SUZUKI MOLY PASTE to the rocker arm shafts.

99000-25140: SUZUKI MOLY PASTE

- Install the rocker arms and shafts as shown in the illustration.

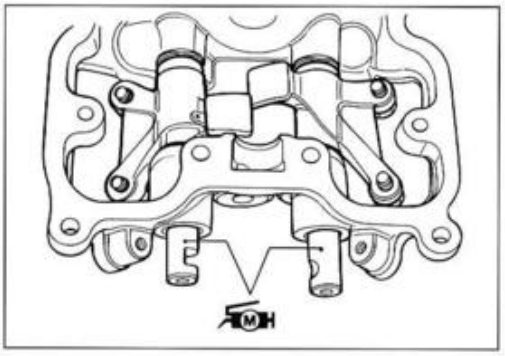

- Tighten the rocker arm shaft set bolts ① to the specified torque.

Set bolt ①: 28 N·m (2.8 kg-m, 20.0 lb-ft)

NOTE:
Use new gasket on the set bolts ①.

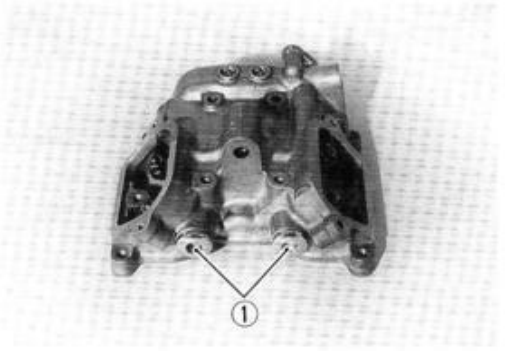

CYLINDER HEAD SERVICE

- Remove the cam chain tensioner by removing the bolt.

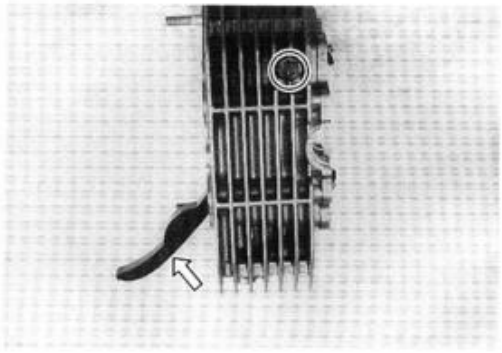

- Compress the springs with the special tools.
- Remove the valve cotters from the valve stem.

09916-14510: Valve spring compressor
09916-14910: Valve spring compressor attachment
09916-84511: Tweezers

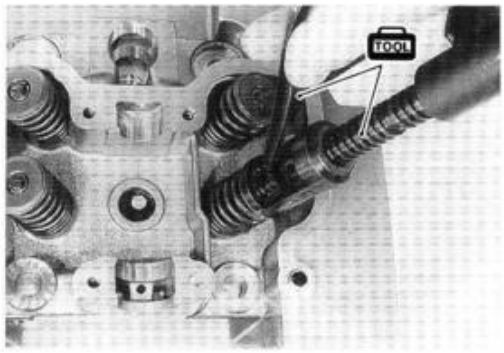

- Remove the valve spring retainer, inner spring and outer spring.
- Remove the vlave stem from the other side.

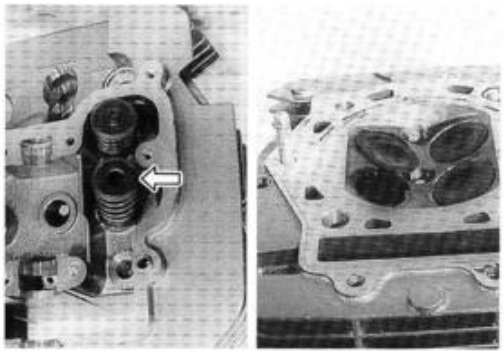

- Remove the oil seal with a long-nose pliers.
- Remove the spring seat.

NOTE:
Removal of the valves completes ordinary disassembling work. If valve guides have to be removed for replacement after inspecting related parts, carry out the steps shown in valve guide servicing.

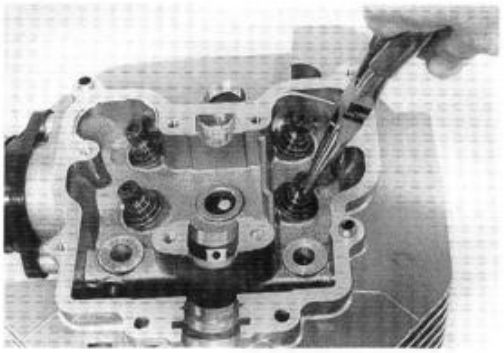

CYLINDER HEAD DISTORTION

Decarbonize the combustion chamber.
Check the gasketed surface of the cylinder head for distortion with a straightedge and thickness gauge, taking a clearance reading at several places as indicated. If the largest reading at any position of the straightege exceeds the limit, replace the cylinder head.

Service Limit: 0.05 mm (0.002 in)

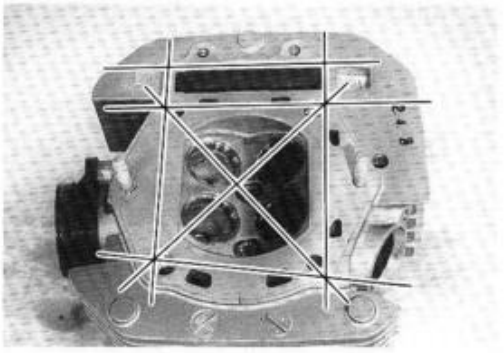

VALVE FACE WEAR

Measure the thickness Ⓣ and, if the thickness is found to have been reduced to the limit, replace the valve.

NOTE:
Visually inspect each valve for wear of its seating face. Replace any valve with an abnormally worn face.

Service Limit: 0.5 mm (0.02 in)

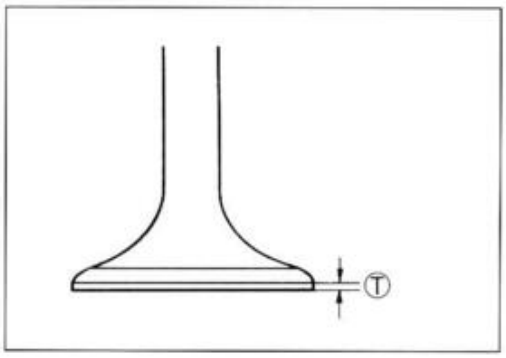

VALVE STEM RUNOUT

Support the valve with "V" blocks, as shown, and check its runout with a dial gauge. The valve must be replaced if the runout exceeds the limit.

Service Limit: 0.05 mm (0.002 in)

TOOL **09900-20701: Megnetic stand**
09900-20606: Dial gauge (1/100 mm)
09900-21304: V-block (100 mm)

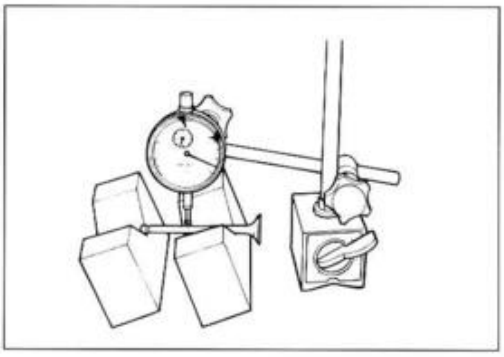

VALVE HEAD RADIAL RUNOUT

Place the dial gauge at right angles to the valve head, and measure the valve head radial runout.
If it measures more than limit, replace the valve.

Service Limit: 0.03 mm (0.001 in)

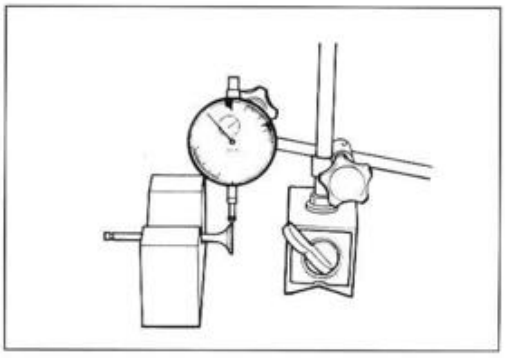

VALVE STEM DEFLECTION

Lift the valve about 10 mm (0.39 in) from the valve seat. Measure the deflection in two directions, "X" and "Y" perpendicular to each other, by positioning the dial gauge as shown. If the deflection measured exceeds the limit specified below, then determine whether the valve or the guide should be replaced with a new one.

TOOL **09900-20606: Dial gauge (1/100 mm)**
09900-20701: Magnetic stand

Service Limit
Intake and exhaust valves: 0.35 mm (0.014 in)

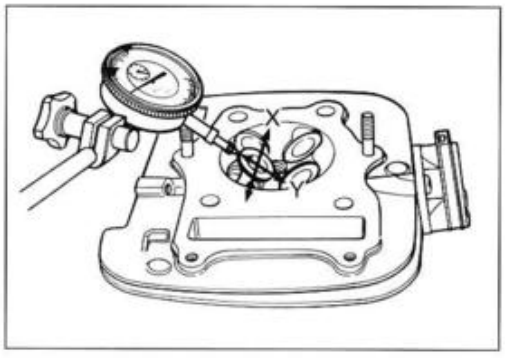

VALVE STEM WEAR

If the valve stem is worn down to the limit, when measured with a micrometer, where the clearance is found to be in excess of the limit indicated, replace the valve; if the stem is within the limit, then replace the guide. After replacing valve or guide, be sure to recheck the clearance.

TOOL 09900-20205: Micrometer (0—25 mm)

Standard
IN. : 5.475—5.490 mm (0.2156—0.2161 in)
EX.: 5.455—5.470 mm (0.2148—0.2154 in)

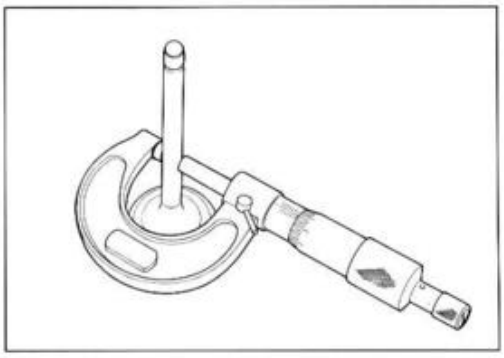

VALVE GUIDE SERVICING

- Remove the valve guide toward the camshaft side with the valve guide remover.

TOOL 09916-44910: Valve guide remover/installer

NOTE:
* *Discard the removed valve guide subassemblies.*
* *Only oversized valve guides are available as replacement part. (Part No.11115-32E70.)*

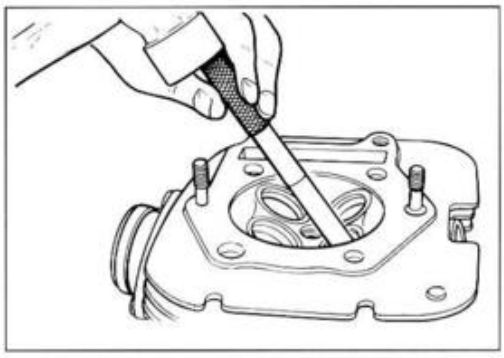

- Re-finish the valve guide holes in cylinder head with the reamer ① and handle ②.

TOOL 09916-34580: Valve guide reamer
09916-34541: Reamer handle

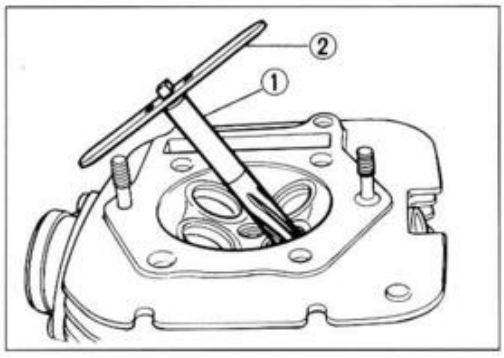

- Fit a ring to each vlave guide. Be sure to use new rings and valve guides.
- Oil the stem hole, too, of each valve guide and drive the guide into the guide hole with the valve guide installer.

TOOL 09916-44910: Valve guide remover/installer

⚠ CAUTION

Failure to oil the valve guide hole before driving the new guide into place may result in a damaged guide or head.

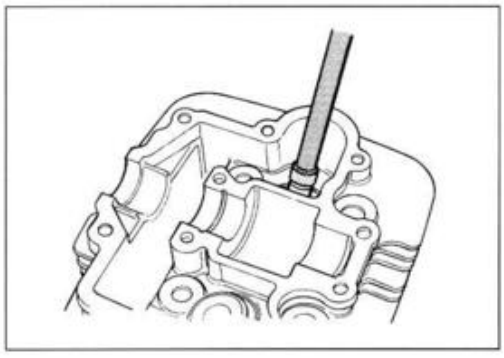

- After fitting the valve guides, re-finish their guiding bores with the reamer ③ and handle ②. Be sure to clean and oil the guides after reaming.

TOOL 09916-34550: Valve guide reamer
09916-34541: Reamer handle

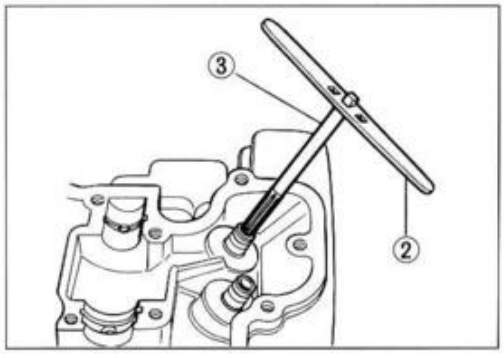

VALVE SEAT WIDTH

- Coat the valve seat uniformly with Prussian blue. Fit the valve and tap the coated seat with the valve face in a rotating manner, in order to obtain a clear impression of the seating contact. In this operation, use the valve lapper to hold the valve head.
- The ring-like dye impression left on the valve face must be continuous-without any break. In addition, the width of the dye ring, which is the visualized seat "width", must be within the specification.

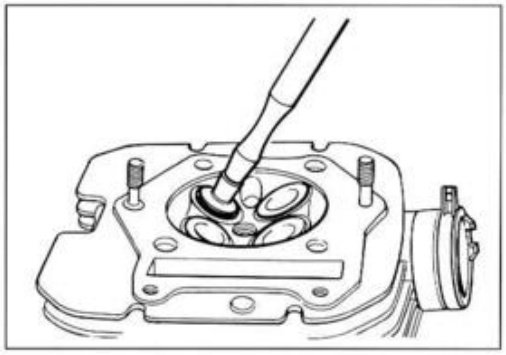

Standard

Valve seat width Ⓦ: 0.9—1.1 mm (0.035—0.043 in)

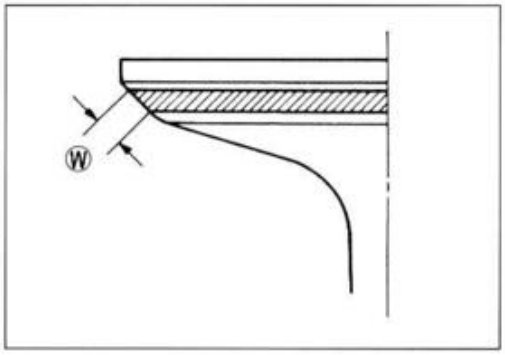

If either requirement is not met, correct the seat by servicing it as follows.

VALVE SEAT SERVICING

The valve seats for both intake and exhaust valves are machined to two different angles. (The seat contact surface is cut 45°.)

	INTAKE	EXHAUST
45°	N-615	N-615
15°	N-615	N-121

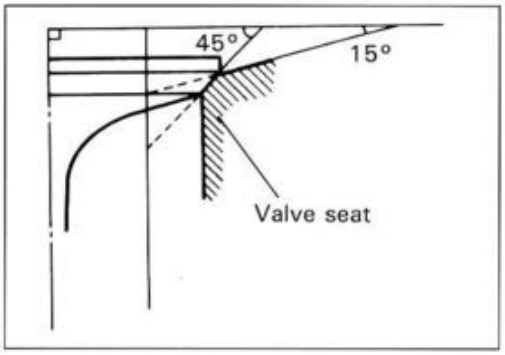

(For U.S.A.)

Valve seat cutter (N-615)
Valve seat cutter (N-121)
Solid pilot (N-140-7.0)

(For the Others)

09916-24900: Valve seat cutter set
09916-20610: Valve seat cutter (N-121)
09916-24210: Valve seat cutter (N-615)
(N-140-7.0) : Solid pilot

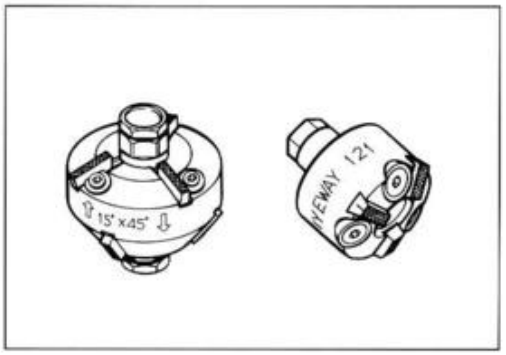

NOTE:
The vlave seat contact area must be inspected after each cut.

- Insert the solid pilot with a slight rotation, seat the pilot snugly. Install the 45° cutter and T-handle.
- Using the 45° cutter, descale and clean up the seat with one or two turns.
- Inspect the seat by the previously described seat width measurement procedure. If the seat is pitted or burned, additional seat conditioning with the 45° cutter is required.

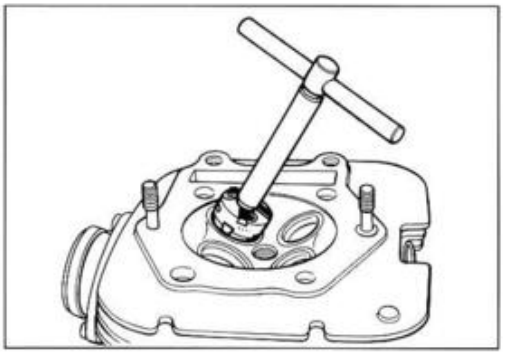

NOTE:
Cut the minimum amount necessary from the seat to prevent the possibility of the valve stem becoming too close to the rocker arm for correct valve contact angle.

If the contact area is too high on the valve, or if it is too wide, use the 15° cutter to lower and narrow the contact area.

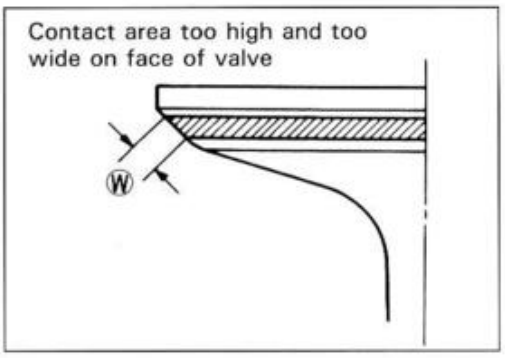

If the contact area is too low or too narrow, use the 45° cutter to raise and widen the contact area.

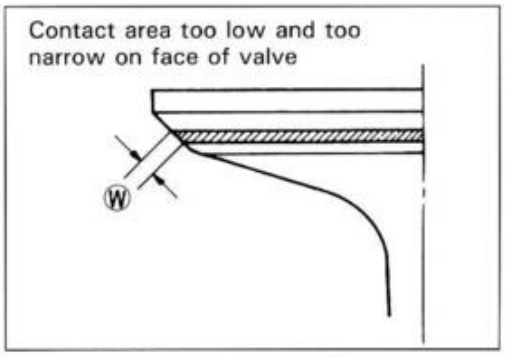

- After the desired seat position and width is achieved, use the 45° cutter very lightly to clean up and burrs caused by the previous cutting operations.

⚠ CAUTION

DO NOT use lapping compound after the final cut is made. The finished valve seat should have a velvety smooth finish and not a highly polished or shiny finish. This will provide a soft surface for the final seating of the valve which will occur during the first few seconds of engine operation.

- Clean and assemble the head and valve components. Fill the intake and exhaust ports with gasoline to check for leaks. If any leaks occur, inspect the valve seat and face for burrs or other things that could prevent the valve from sealing.

⚠ WARNING

Always use extreme caution when handling gasoline.

NOTE:
After servicing the valve seats, be sure to check the valve clearance after the cylinder head has been reinstalled. (Refer to page 2-3.)

VALVE STEM END CONDITION

Inspect the valve stem end face for pitting and wear. If pitting or wear of the stem end face are present, the valve stem end should be resurfaced, providing that the length ① will not be reduced to less than 2.7 mm (0.11 in). If this length becomes less than 2.7 mm (0.11 in), the valve should be replaced. After installing a valve whose stem end has been ground off as above, check to ensure that the face ② of the valve stem end is above the cotters ③.

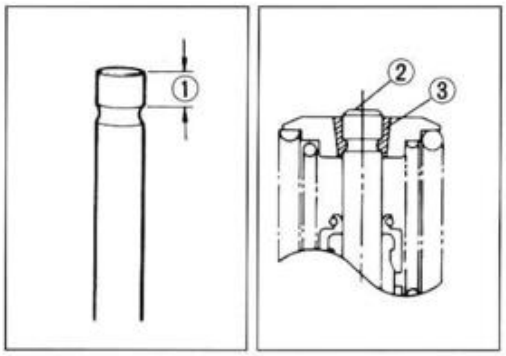

VALVE SPRING

The force of the coil spring keeps the valve seat tight. Weakened spring result in reduced engine power output, and often account for the chattering noise coming from the valve mechanism.

Check the springs for proper strength by measuring their free length and also by the force required to compress them. If the spring length is less than the service limit, or if the force required to compress the spring does not fall within the range specified, replace both inner and outer springs as a set.

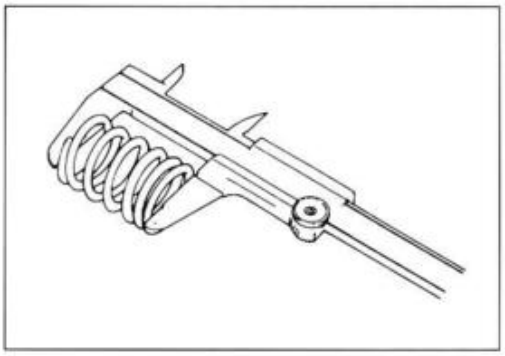

TOOL 09900-20102: Vernier calipers

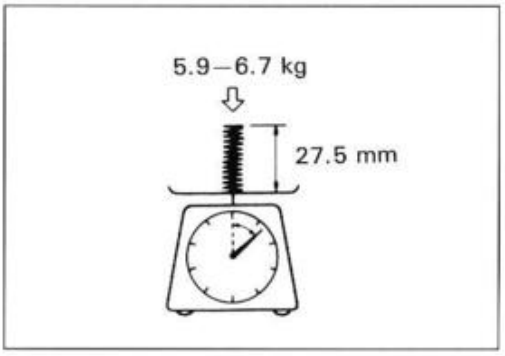

Valve spring free length
Service Limit
INNER : 34.4 mm (1.35 in)
OUTER : 38.1 mm (1.50 in)

Valve spring tension
Standard
INNER : 5.9—6.7 kg/27.5 mm (13.0—14.8 lbs/1.1 in)
OUTER : 13.8—15.8 kg/31.0 mm (30.4—34.8 lbs/1.2 in)

VALVE AND VALVE SPRING REASSEMBLY

- Install the valve spring seat ①. Be careful not to confuse the lower seat with the spring retainer ②.

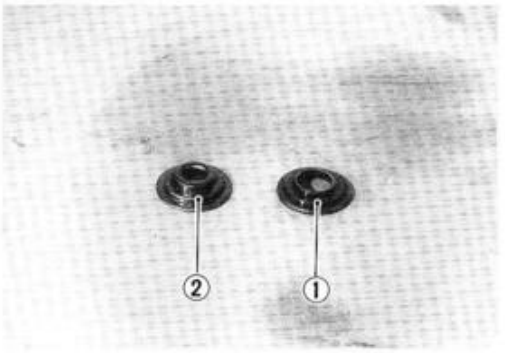

- Lubricate each seal with oil, and fit the seals onto each guide.

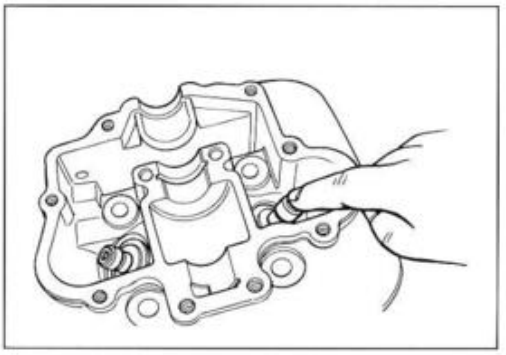

⚠ CAUTION

Do not reuse the oil seals.

- Insert the valves, with their stems coated with (SUZUKI MOLY PASTE) all around and along the full stem length without any break.
  Similarly oil the lip of the stem seal.

99000-25140: SUZUKI MOLY PASTE

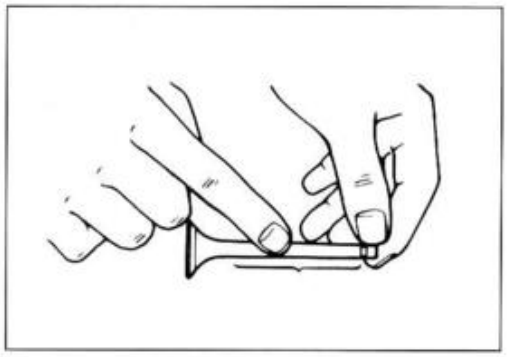

⚠ CAUTION

When inserting each valve, take care not to damage the lip of the stem seal.

- Install the valve springs, making sure that the close-pitch end ① of each spring goes in first to rest on the head. The coil pitch of both inner and outer springs vary: the pitch decreases from top to bottom, as shown in the illustration.

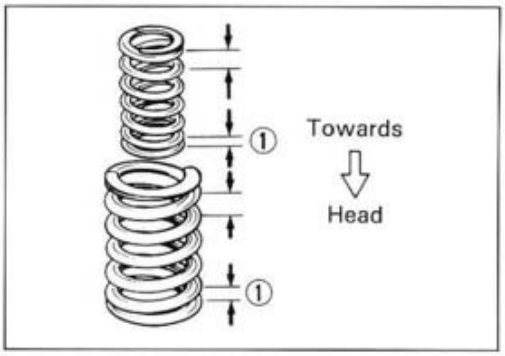

- Put on the valve spring retainer, and using the valve lifter, press down the springs, fit the cotter halves to the stem end, and release the lifter to allow the cotter ② to wedge in between retainer and stem. Be sure that the rounded lip ③ of the cotter fits snugly into the groove ④ in the stem end.

09916-14510: Valve spring compressor
09916-14910: Valve spring compressor attachment
09916-84511: Tweezers

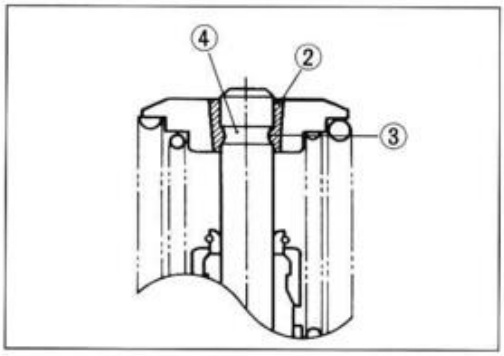

⚠ CAUTION

Be sure to locate each spring and valve to their original positions.

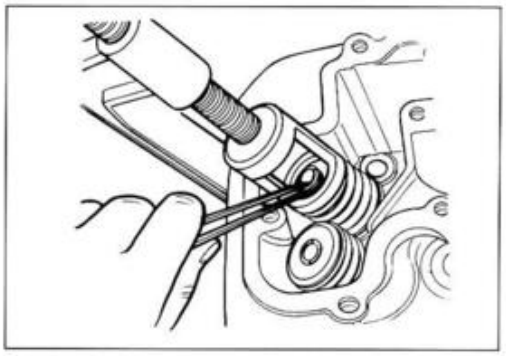

CAMSHAFT/AUTOMATIC DE-COMP. ASSEMBLY

⚠ CAUTION

Do not attempt to disassemble the camshaft/automatic de-comp. assembly. It is not serviceable.

AUTOMATIC DE-COMP.

Move the automatic de-comp. weight by hand to inspect if operating smoothly.
If it does not smoothly must be replaced with a new camshaft/automatic de-comp. assembly.

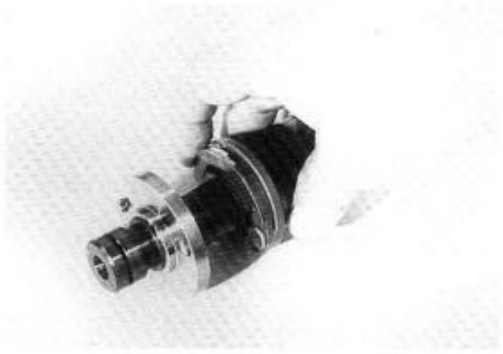

CAMSHAFT

The camshaft should be checked for runout and also for wear of cams and journals if the engine has been noted to produce abnormal noise or vibration or to lack output power. Any of these malconditions could be caused by a worn camshaft.

CAMSHAFT CAM WEAR

Worn-down cams are often the cause of mistimed valve operation resulting in reduced output power.
The limit of cam wear is specified for both intake and exhaust cams in terms of cam height Ⓗ, which is to be measured with micrometer.
Replace the camshaft if found it worn down to the limit.

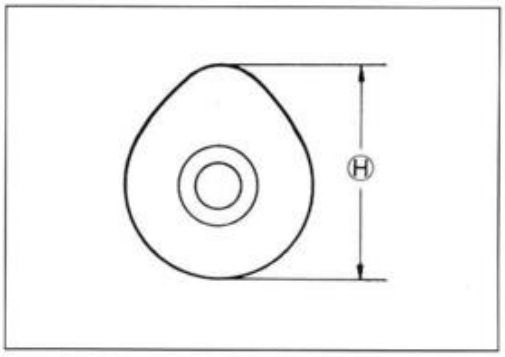

TOOL **09900-20202: Micrometer (25—50 mm)**

Cam height Ⓗ

Service Limit **Intake cam : 33.410 mm (1.3154 in)**
Exhaust cam: 33.400 mm (1.3150 in)

CAMSHAFT JOURNAL WEAR

Determine whether each journal is worn down to the limit or not by measuring camshaft journal oil clearance with the camshaft installed. Use plastigauge to read the clearance, which is specified as follows:

Camshaft journal oil clearance
Service Limit: 0.150 mm (0.0059 in)

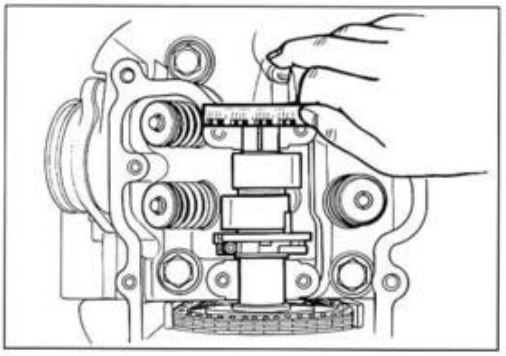

- Tighten the cylinder head cover bolts evenly and diagonally to the specified torque.

Cylinder head cover bolt: 10 N·m (1.0 kg-m, 7.0 lb-ft)

TOOL **09900-22301: Plastigauge**

NOTE:
To properly measure the oil clearance with plasti-gauge, all gasket material must be removed from fitting surfaces of cylinder head and cover. Do not apply SUZUKI BOND No.1207B until after the oil clearance has been determined.

If the camshaft journal oil clearance measured exceeds the limit, measure the outside diameter of camshaft. Replace either the cylinder head set or the camshaft if the clearance is incorrect.

TOOL 09900-20205: Micrometer (0—25 mm)

Camshaft journal O.D.: 21.959—21.980 mm (0.8645—0.8654 in)
(Right & Center)

Camshaft journal O.D.: 17.466—17.484 mm (0.6877—0.6883 in)
(Left)

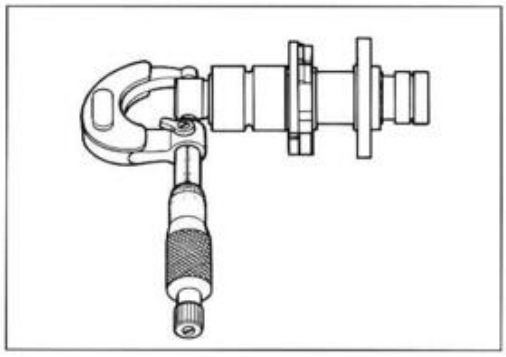

CAMSHAFT RUNOUT

Measure the runout with a dial gauge. Replace the camshaft if the runout exceeds the limit.

Service Limit: 0.10 mm (0.004 in)

TOOL 09900-20701: Magnetic stand
09900-20606: Dial gauge (1/100 mm)
09900-21304: V-block

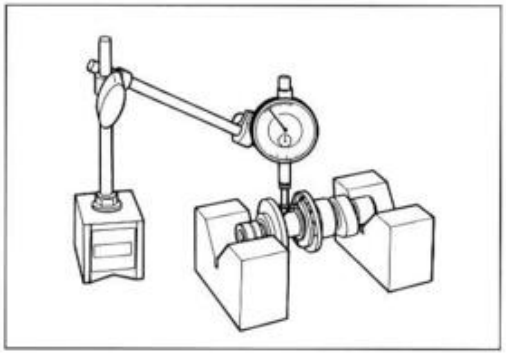

CYLINDER DISTORTION

Check the gasketed surface of the cylinder for distortion with a straightedge and thickness gauge, taking a clearance reading at several places as indicated. If the largest reading at any position of the straightedge exceeds the limit, replace the cylinder.

Service Limit: 0.05 mm (0.002 in)

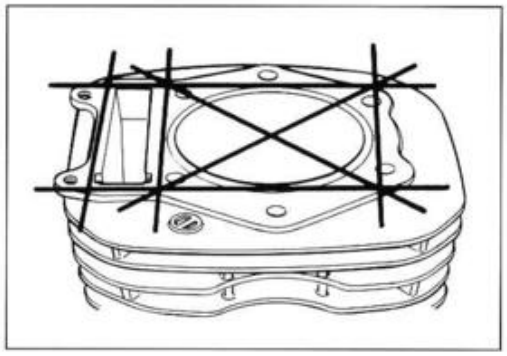

CYLINDER BORE

Inspect the cylinder wall for nicks, scratches or other damage.

TOOL 09900-20508: Cylinder bore gauge set
09900-20513: Gauge rod

Standard: 100.000—100.015 mm (3.9370—3.9376 in)

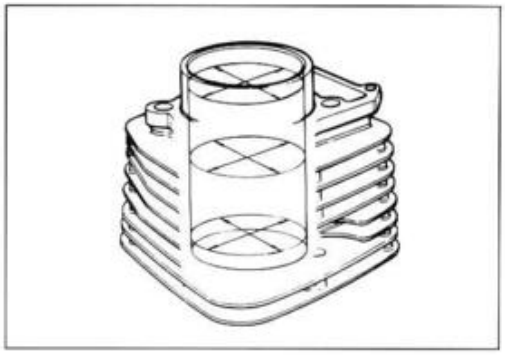

PISTON DIAMETER

Using a micrometer, measure the piston outside diameter at the place 21 mm (0.8 in) from the skirt end as shown in Fig. If the measurement is less than the limit, replace the piston.

TOOL 09900-20204: Micrometer (75—100 mm)

Service Limit: 99.880 mm (3.9323 in)

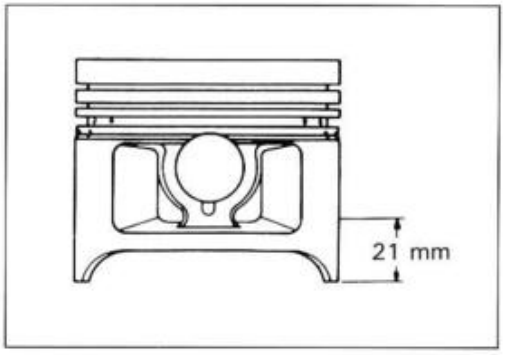

PISTON—CYLINDER CLEARANCE

As a result of the previous measurement, if the piston to cylinder clearance exceeds the limit, replace both cylinder and piston.

Service Limit: 0.120 mm (0.0047 in)

PISTON RING—GROOVE CLEARANCE

Using a thickness gauge, measure the side clearance of the 1st and 2nd rings. If any of the clearances exceeds the limit, replace both piston and piston rings.

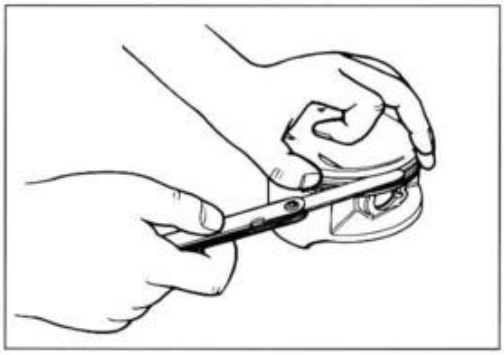

TOOL 09900-20803: Thickness gauge
09900-20205: Micrometer (0—25 mm)

Piston ring—groove clearance
Service Limit
1st : 0.180 mm (0.0071 in)
2nd: 0.150 mm (0.0059 in)

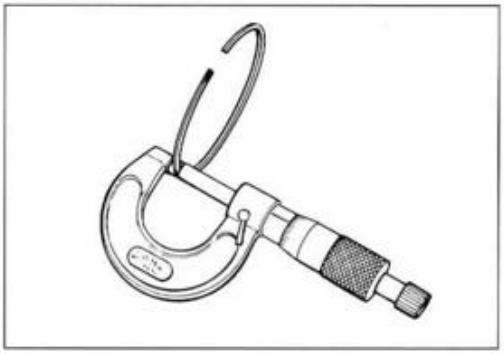

Piston ring groove width
Standard
1st : 1.23—1.25 mm (0.048—0.049 in)
2nd: 1.21—1.23 mm (0.047—0.048 in)
Oil : 2.81—2.83 mm (0.110—0.111 in)

Piston ring thickness
Standard
1st : 1.170—1.190 mm (0.0461—0.469 in)
2nd: 1.150—1.170 mm (0.0453—0.0461 in)

NOTE:
Using a soft-metal scraper, decarbon the crown of the piston. Clean the ring grooves similarly.

PISTON RING FREE END GAP AND PISTON RING END GAP

Before installing piston rings, measure the free end gap of each ring using vernier calipers.
Next, fit the ring in the cylinder, and measure each ring end gap using a thickness gauge.
If any ring has an excess end gap, replace the ring.

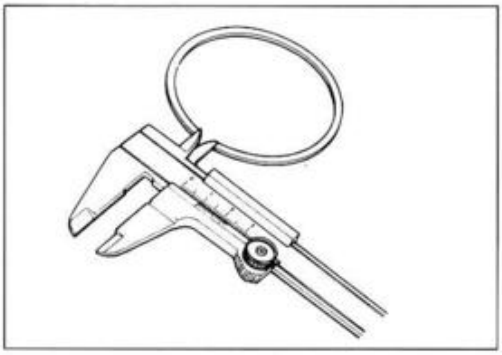

TOOL 09900-20102: Vernier calipers

Piston ring free end gap
Service Limit
1st : 10.8 mm (0.43 in)
2nd: 9.1 mm (0.36 in)

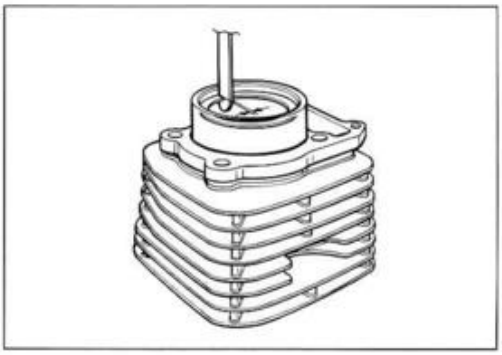

TOOL 09900-20803: Thickness gauge

Piston ring end gap
Service Limit
1st: 0.50 mm (0.020 in)
2nd: 1.00 mm (0.039 in)

PISTON PIN AND PIN BORE

Using a caliper gauge, measure the piston pin bore inside diameter, and using a micrometer measure the piston pin outside diameter. If the difference between these two measurements is more than the limits, replace both piston and piston pin.

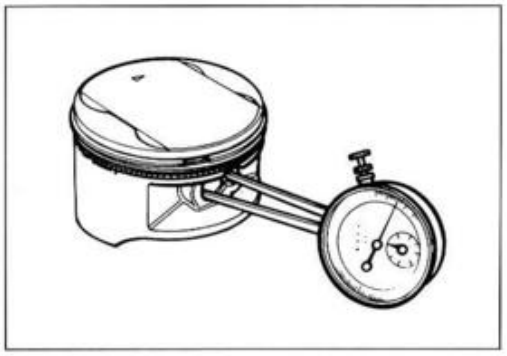

TOOL **09900-20605: Dial calipers**
09900-20205: Micrometer (0—25 mm)

Piston pin bore
Service Limit: 23.030 mm (0.9067 in)

Piston pin O.D.
Service Limit: 22.980 mm (0.9047 in)

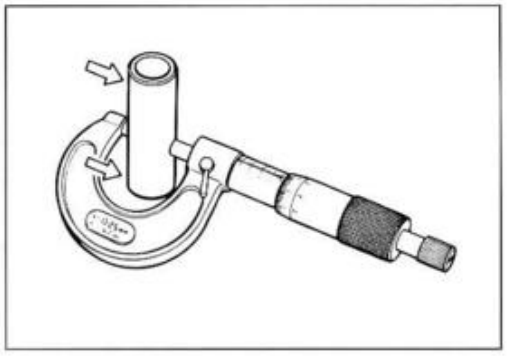

CONROD SMALL END I.D.

Using a caliper gauge, measure the conrod small end inside diameter.

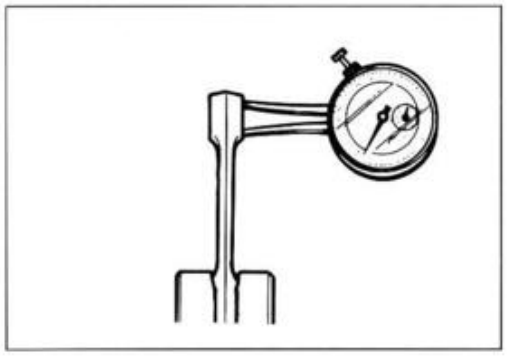

TOOL **09900-20605: Dial calipers**

Service Limit: 23.040 mm (0.9071 in)

If the conrod small end bore inside diameter exceeds the limit, replace conrod.

CONROD DEFLECTION AND CONROD BIG END SIDE CLEARANCE

Wear on the big end of the conrod can be estimated by checking the movement of the small end of the rod. This method can also check the extent of wear on the parts of the conrod's big end.

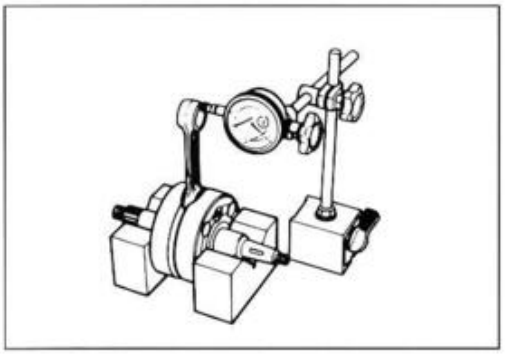

TOOL **09900-20701: Magnetic stand**
09900-20606: Dial gauge (1/100 mm)
09900-21304: V-block

Service Limit: 3.0 mm (0.12 in)

Push the big end of the conrod to one side and measure the side clearance with a thickness gauge.

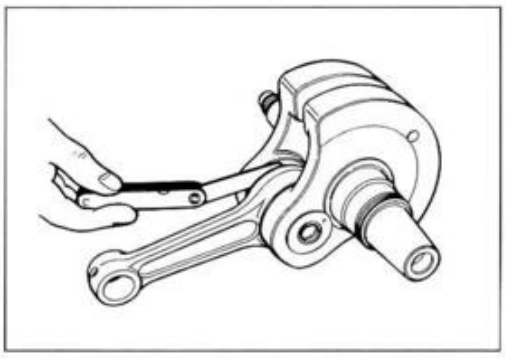

TOOL 09900-20803: Thickness gauge

Service Limit: 1.00 mm (0.039 in)

Where the limit is exceeded, replace crankshaft assembly or reduce the deflection and the side clearance to within the limit by replacing the worn parts—conrod, big end bearing and crank pin etc.

CRANKSHAFT RUNOUT

Support the crankshaft with "V" blocks as shown, with the two end journals resting on the blocks.
Position the dial gauge, as shown, and rotate the crankshaft slowly to read the runout.
Correct or replace the crankshaft if the runout is greater than the limit.

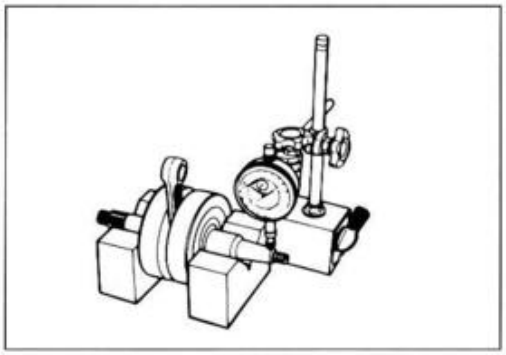

TOOL 09900-20606: Dial gauge (1/100 mm)
09900-20701: Magnetic stand
09900-21304: V-block (100 mm)

Service Limit: 0.05 mm (0.002 in)

BALANCERSHAFT AND GEAR

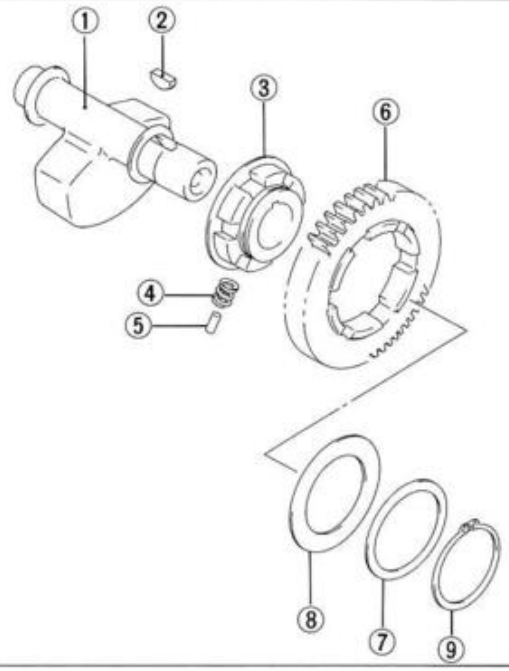

① Balancershaft
② Key
③ Inner race
④ Spring (6 pcs)
⑤ Pin (3 pcs)
⑥ Driven gear
⑦ Washer
⑧ Washer
⑨ Circlip

DISASSEMBLY

- Remove the circlip ① and washers (②, ③).
- Remove the balancer driven gear.

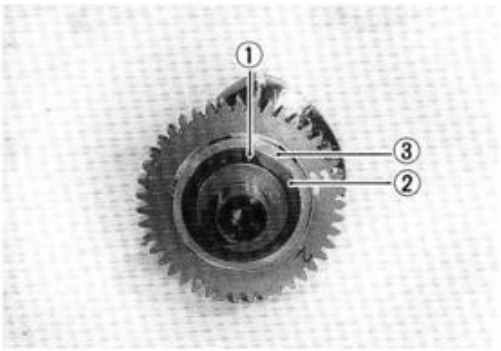

- Remove the 6 springs and 3 pins.

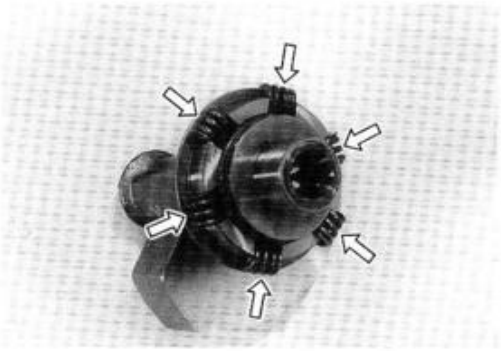

Inspect the crank balancershaft wear or damage.

REASSEMBLY

- When installing the inner race, align the pin with groove of inner race.

- When installing the balancer driven gear, align the two punched marks as shown in photo.

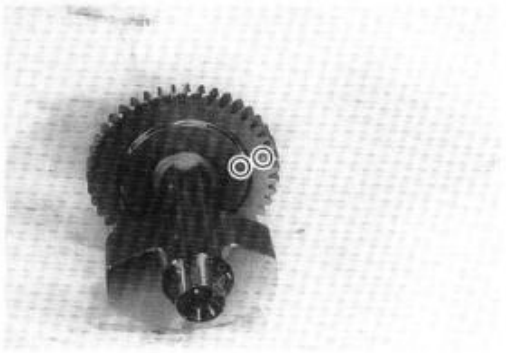

- When installing the 6 springs ① and 3 pins ②, set the pins ② to the triangle position as shown in photo.

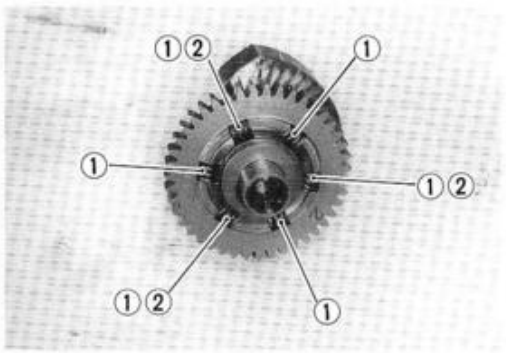

CLUTCH DRIVE PLATE

Measure the thickness of each drive plate with vernier calipers. Replace drive plates found to have worn down to the limit.

TOOL 09900-20102: Vernier calipers

Standard

Thickness No.1 & No.2: 2.9—3.1 mm (0.11—0.12 in)

Service Limit

Thickness No.1 & No.2: 2.6 mm (0.10 in)

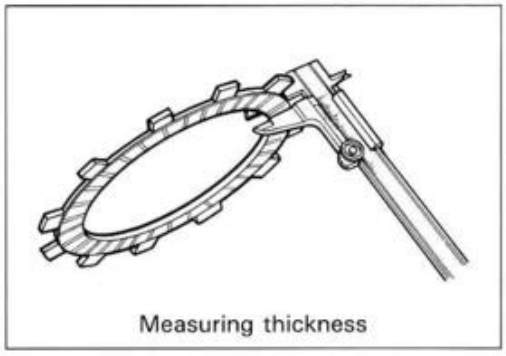

Measuring thickness

CLUTCH DRIVEN PLATE

Measure each driven plate for distortion with a thickness gauge. Replace driven plates which exceed the limit.

TOOL 09900-20803: Thickness gauge

Service Limit: 0.1 mm (0.004 in)

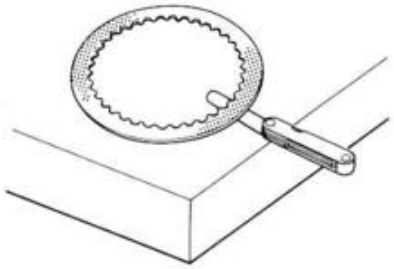

Measuring distortion

CLUTCH SPRING FREE LENGTH

Measure the free length of each coil spring with a vernier calipers, and determine the elastic strength of each. Replace any spring not within the limit.

TOOL 09900-20102: Vernier calipers

Service Limit: 33.0 mm (1.30 in)

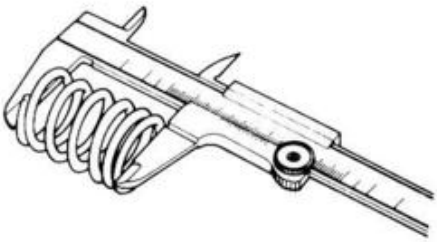

Measuring clutch spring

CLUTCH RELEASE BEARING

Inspect the release bearing for any abnormality, particularly cracks, to decide whether it can be reused or should be replaced. Smooth engagement and disengagement of the clutch depends much on the condition of this bearing.

CLUTCH RELEASE PINION AND RACK

Rotate the clutch release pinion by hand to inspect for a smooth roration. If a large resistance is felt to rotation, inspect the pinion and rack for damage or wear. If the defect is found, replace them as a set.

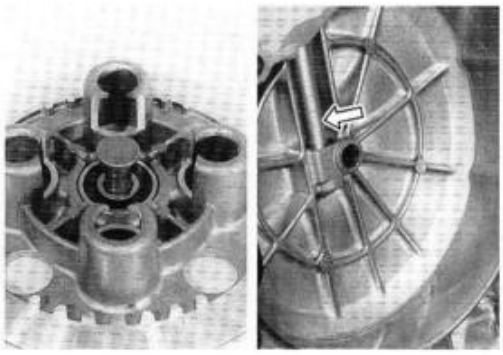

STARTER CLUTCH

① Starter clutch
② Bearing
③ Starter idle gear
④ Idle gear shaft
⑤ Starter torque limiter

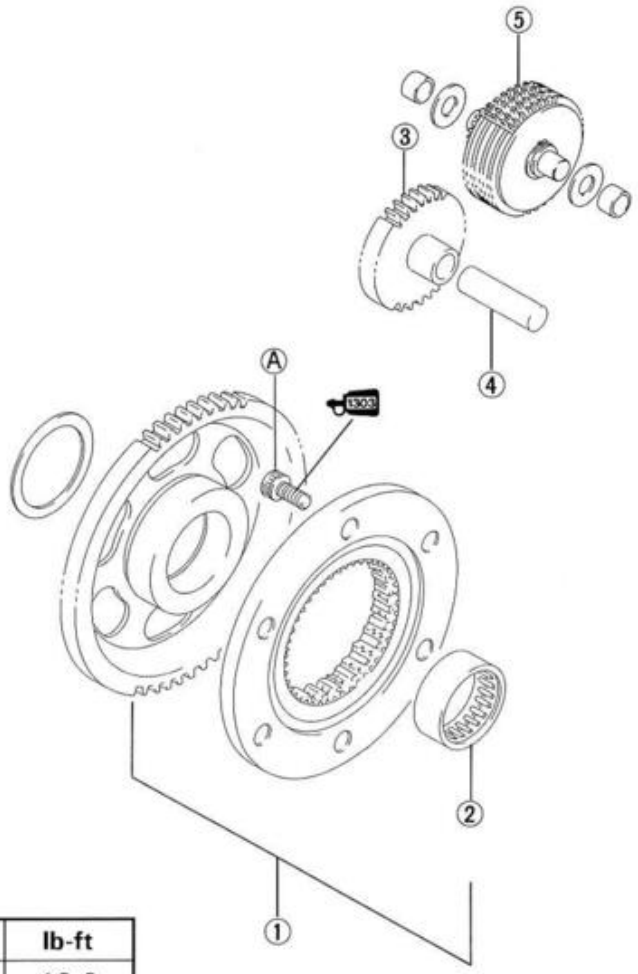

ITEM	N·m	kg-m	lb-ft
Ⓐ	25	2.5	18.0

DISASSEMBLY

- Remove the starter clutch gear.

- Remove the 3 bolts with a 6 mm hexagon wrench and 36 mm offset wrench.

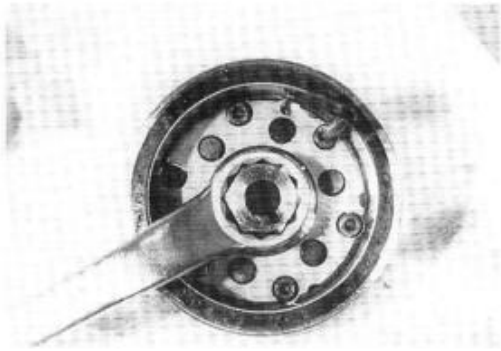

STARTER CLUTCH

Inspcet the stater clutch wear or damage.

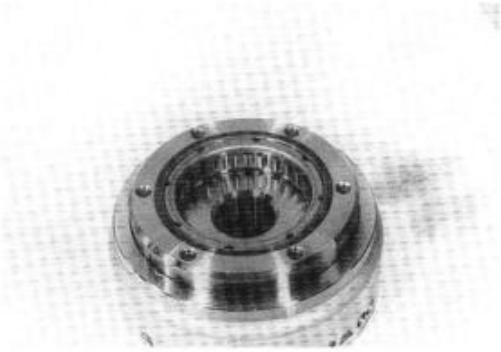

REASSEMBLY

- Apply THREAD LOCK SUPER "1303" to the bolts and tighten them to the specified torque.

1303 99000-32030: THREAD LOCK SUPER "1303"

Bolt: 25 N·m (2.5 kg-m, 18.0 lb-ft)

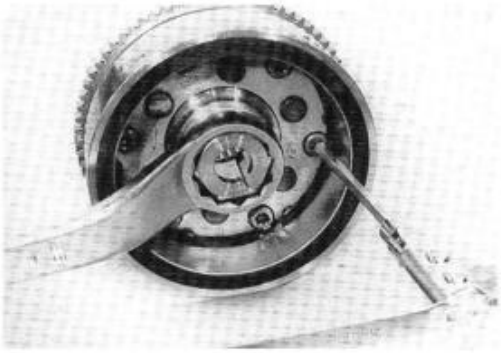

Check that the rotor ① turns in the direction of the arrow mark ② on the rotor while holding the starter gear, and that the rotor never turns in the opposite direction of the arrow mark.

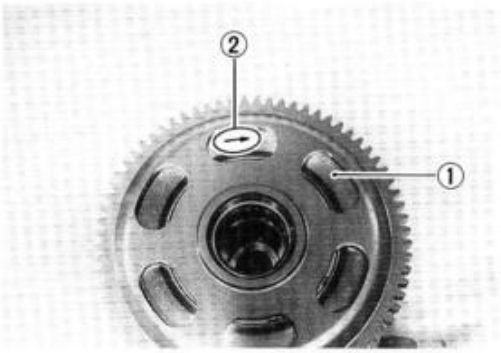

STARTER TORQUE LIMITER

⚠ CAUTION

Do not attempt to disassemble the starter toque limiter. It is not serviceable.

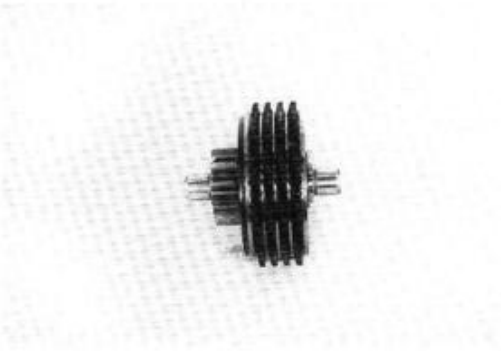

Check the slip torque with the special tools.

Slip torque: 42—64 N·m (4.2—6.4 kg-m, 30.5—46.5 lb-ft)

TOOL 09930-73110: Starter torque limiter holder
09930-73120: Starter torque limiter socket

Set the starter torque limiter to the special tools and vise as shown in the photograph.
If the slip torque is not within the specification, replace the starter torque limiter with a new one.

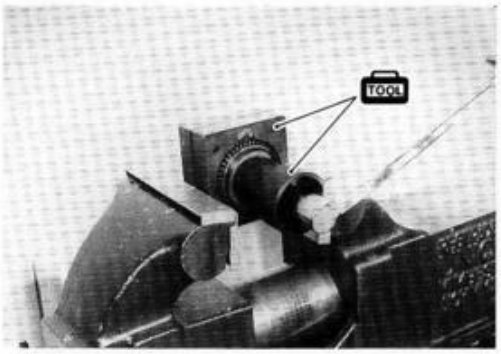

TRANSMISSION

- Disassemble the transmission gears as shown in the illustration.

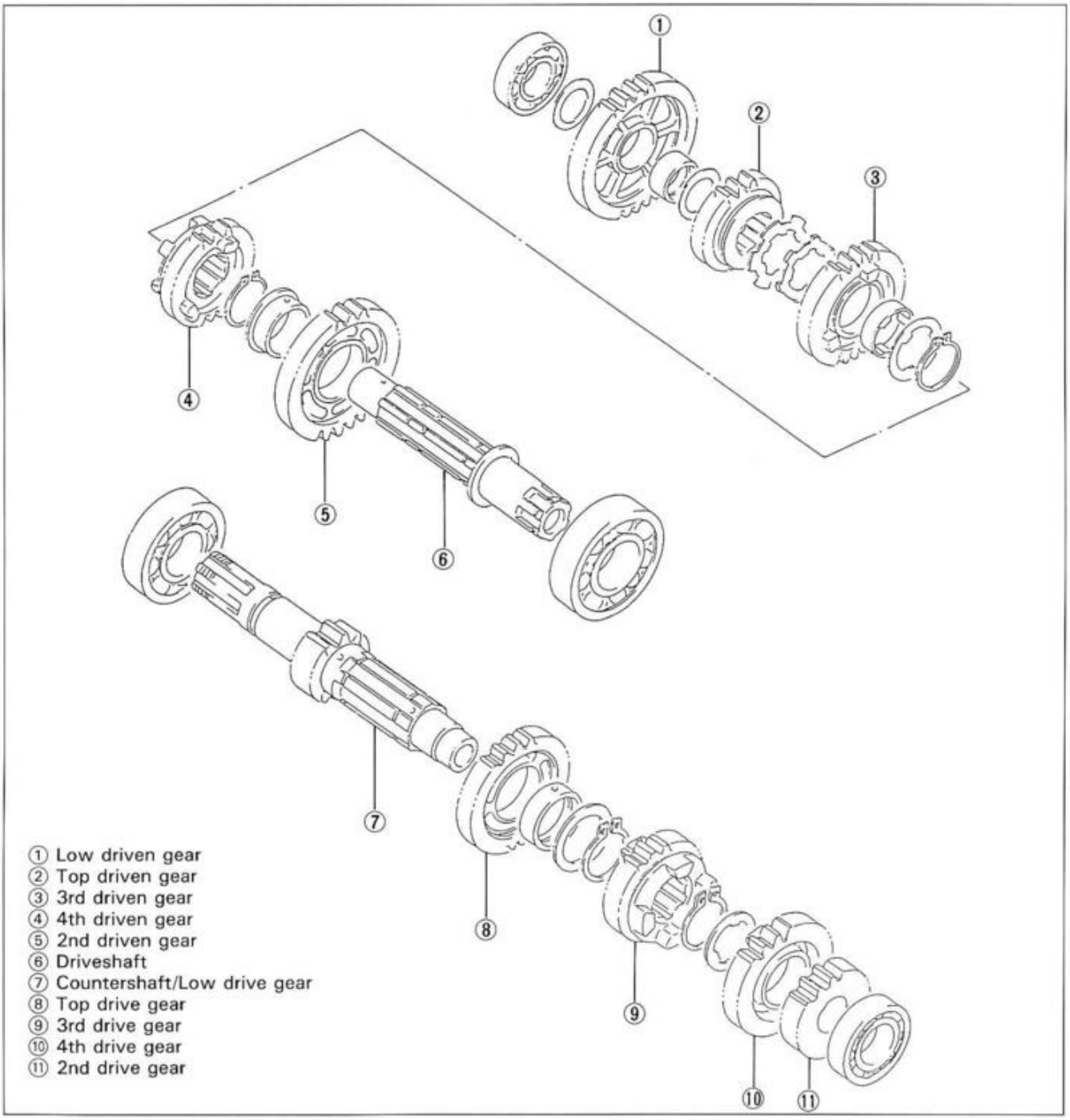

2ND DRIVE GEAR DISASSEMBLY

- Remove the 2nd drive gear by using the gear puller and appropriate attachment.

TOOL 09913-60910: Gear puller

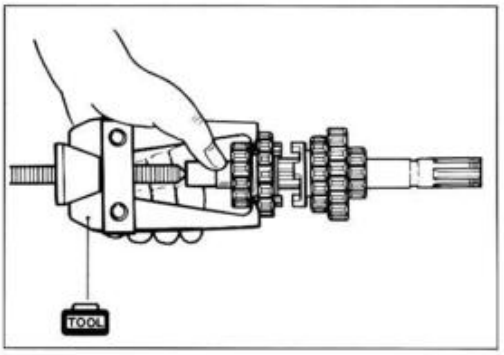

SHIFT FORK—GROOVE CLEARANCE

Using a thickness gauge, check the shifting fork clearance in the groove of its gear.
The clearance for each of the three shifting forks plays an important role in the smoothness and positiveness of shifting action.

Shift fork-Groove clearance
Standard: 0.10—0.30 mm (0.004—0.012 in)
Service Limit: 0.50 mm (0.020 in)

If the clearance checked is noted to exceed the limit specified, replace the fork or its gear, or both.

TOOL **09900-20803: Thickness gauge**
09900-20102: Vernier calipers

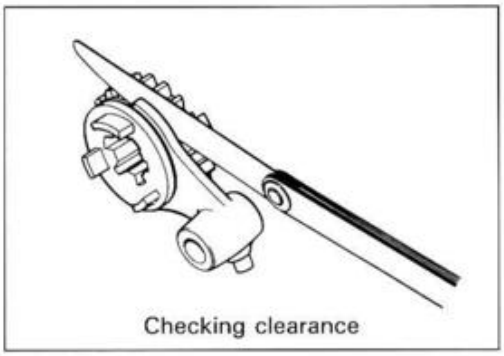
Checking clearance

Shift fork groove width
Standard: 5.0—5.1 mm (0.197—0.200 in)

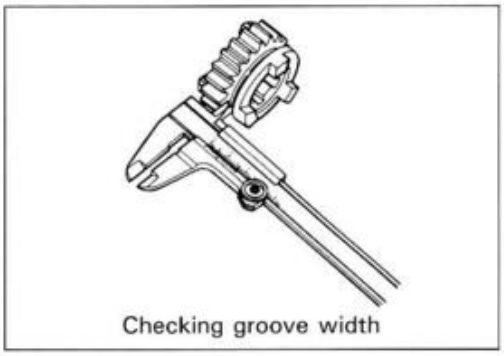
Checking groove width

Shift fork thickness
Standard: 4.8—4.9 mm (0.189—0.193 in)

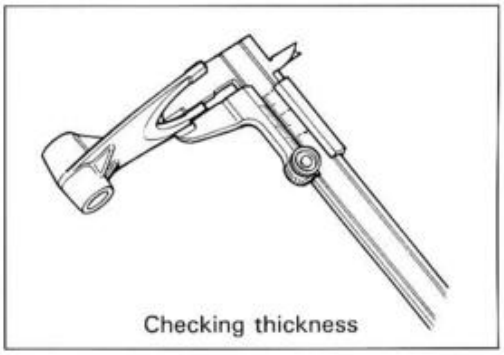
Checking thickness

REASSEMBLY

Assemble the countershaft and driveshaft, in the reverse order of disassembly. Pay attention to following points:

NOTE:
Before installing the gears, lightly coat moly paste or engine oil to the driveshaft and countershaft.

99000-25140: SUZUKI MOLY PASTE

- When installing a new circlip, pay attention to the direction of the circlip. Fit it to the side where the thrust is as shown in the illustration.

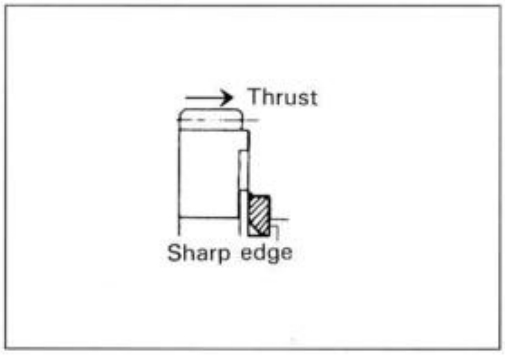

⚠ CAUTION

*** Never reuse a circlip. After a circlip has been removed from a shaft, it should be discarded, and a new circlip must be installed.**
*** When installing a new circlip, care must be taken not to expand the end gap larger than required to slip the circlip over the shaft.**
*** After installing a circlip, always insure that it is completely seated in its groove and securely fitted.**

2ND DRIVE GEAR

- Press-fit 2nd drive gear ① onto the countershaft.

NOTE:
Before reassembling, coat the internal face of the 2nd drive gear with THREAD LOCK SUPER "1303".

99000-32030: THREAD LOCK SUPER "1303"

NOTE:
Take care not to smear 4th drive gear with THREAD LOCK SUPER "1303".

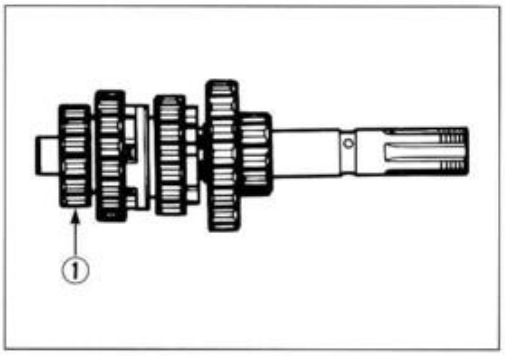

NOTE:
* *After mounting the 2nd drive gear, check that 4th drive gear spins smoothly by moving it with your fingers.*
* *This procedure may be performed only twice before shaft replacement is required.*

3RD DRIVEN GEAR BUSHING

- When installing the gear bushing onto the driveshaft, align the oil hole ② of the shaft with the bushing oil hole ③.

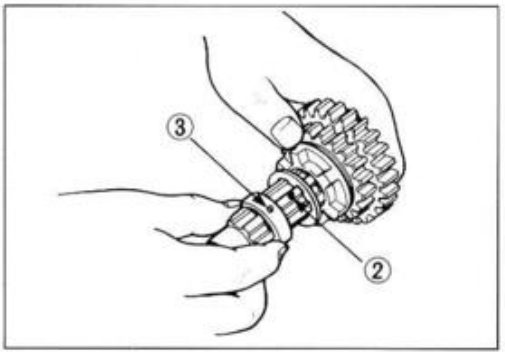

NOTE:
In reassembling the transmission, attention must be given to the locations and positions of washers and circlips. The cross sectional view given here will serve as a reference for correctly mounting the gears, washers and circlips.

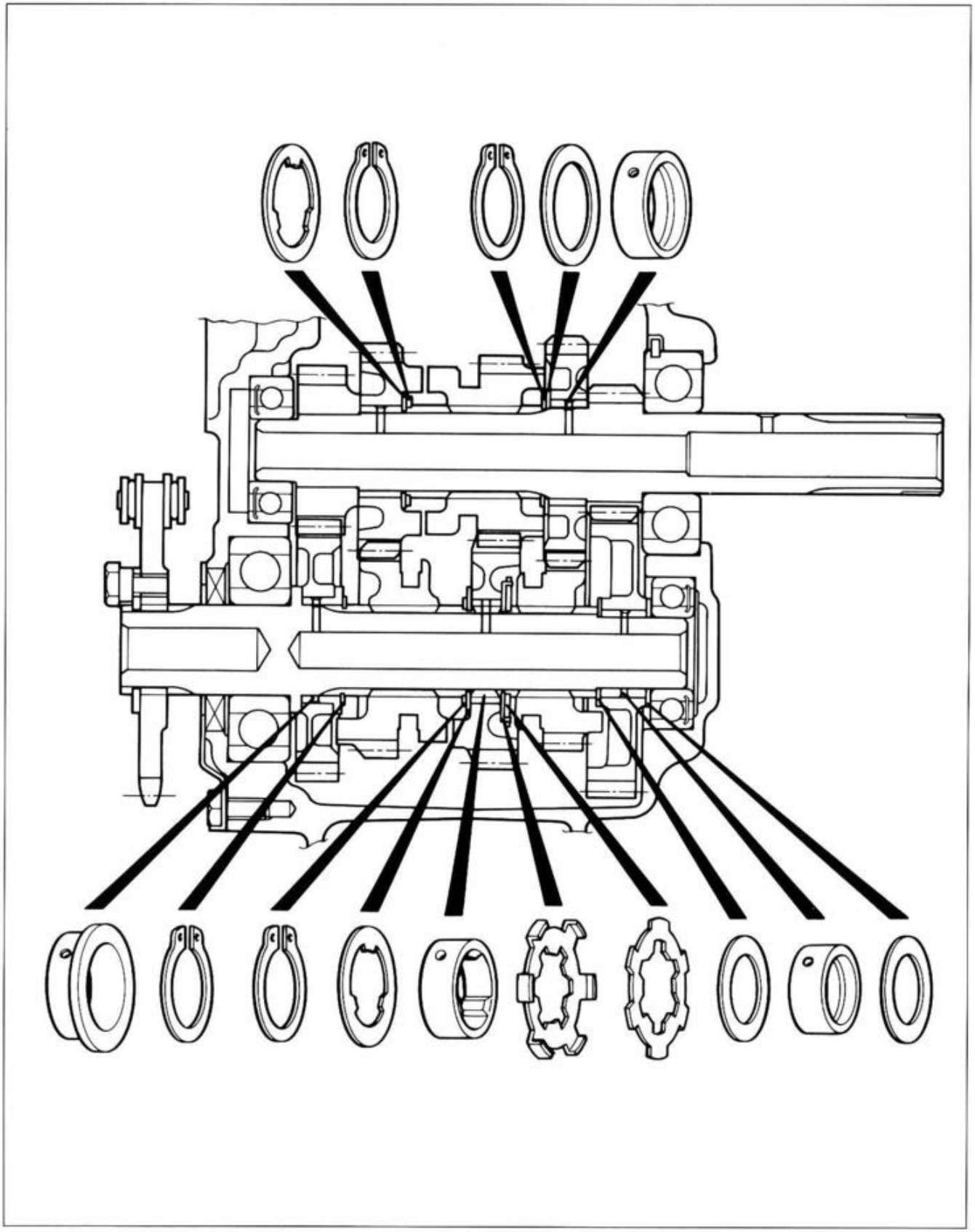

OIL NOZZLE AND OIL JET

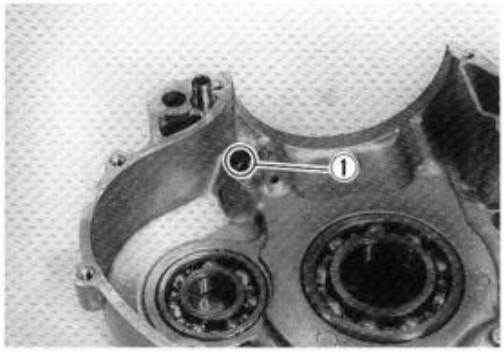

REMOVAL

- Remove the oil nozzle ① and oil jet ② of the right crankcase.

⚠ CAUTION

The removed oil jet ② should be replaced with a new one.

INSPECTION

Check the oil nozzle for any damage or clogging.

REASSEMBLY

- Install the new oil jet ② as shown in the illustration.

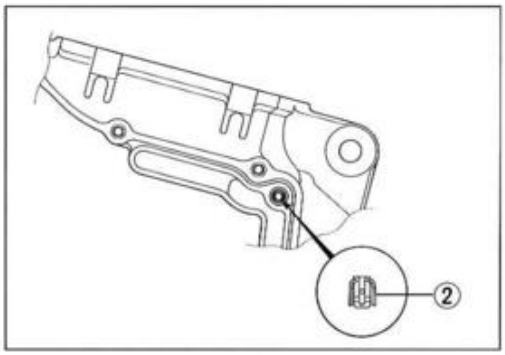

- Install the oil nozzle ①.
- Apply THREAD LOCK SUPER "1303" to the bolt and tighten to the specified torque.

1303 99000-32030: THREAD LOCK SUPER "1303"

Bolt: 10 N·m (1.0 kg-m, 7.0 lb-ft)

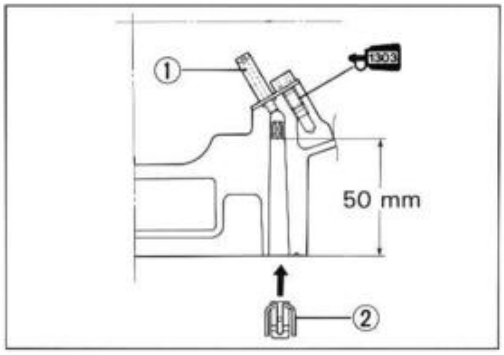

CRANKCASE BEARINGS

Inspect the play of the crankcase bearings by hand while they are in the left and right crankcase. Rotate each crankcase bearing inner race by hand to inspect for abnormal noise and smooth rotation. Replace the bearing if there is anything unusual.

NOTE:
When reassembling the bearing retainer ④, apply a small quantity of THREAD LOCK "1342" to the bearing retainer screws and bolts.

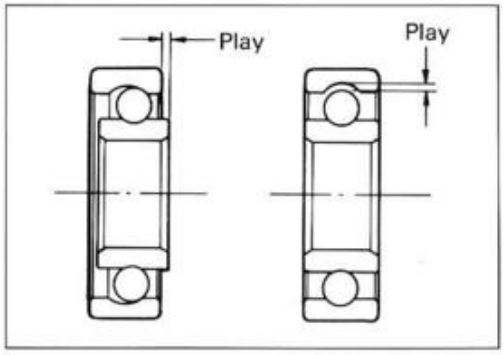

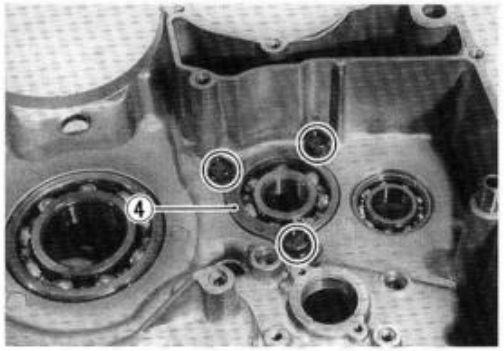

OIL FILTER

- Remove the oil filter cap.
- Remove the oil filter ①.
- Install the new oil filter.

NOTE:
Before installing the oil filter and oil filter cap, check to be sure that the spring ② and new O-rings (③ and ④) are installed correctly.

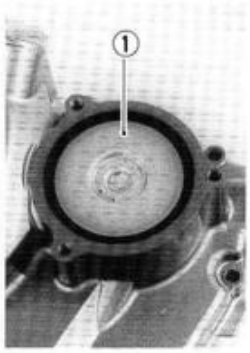

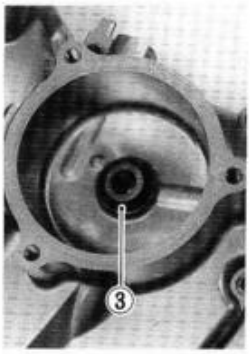

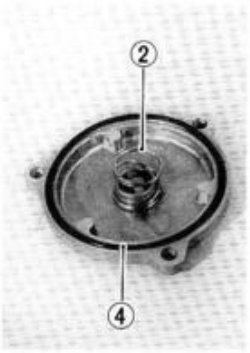

GENERATOR

- Remove the generator coil.

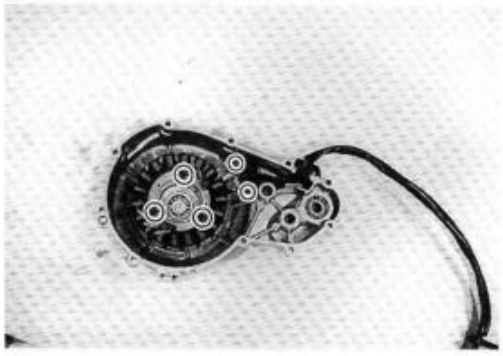

- Remove the bearing by removing the circlip.

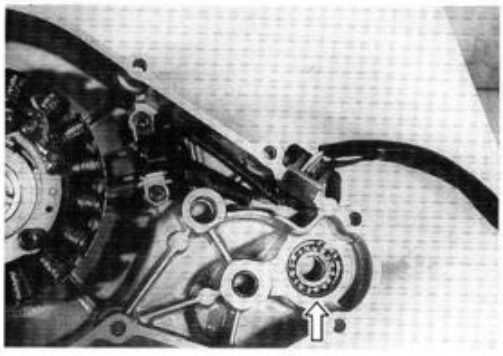

ENGINE REASSEMBLY

The engine is reassembled by carrying out the steps of disassembly in the reverse order, but there are a number of steps that demand special descriptions or precautionary measures.

NOTE:
Apply engine oil to each running and sliding part before reassembling.

OIL SEALS

- Fit the respective oil seals to the crankcase, clutch cover and gearshift cover.
- Apply SUZUKI SUPER GREASE "A" to the lip of oil seals.

99000-32030: SUZUKI SUPER GREASE "A"

⚠ CAUTION

Replace the oil seals with new ones every disassembly to prevent oil leakage.

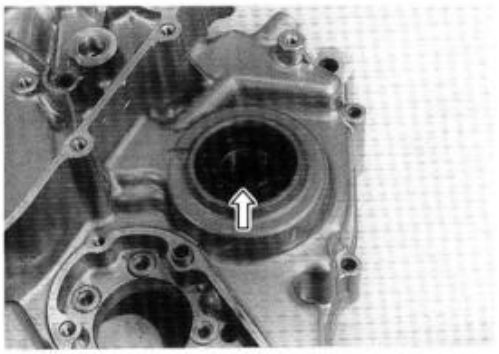

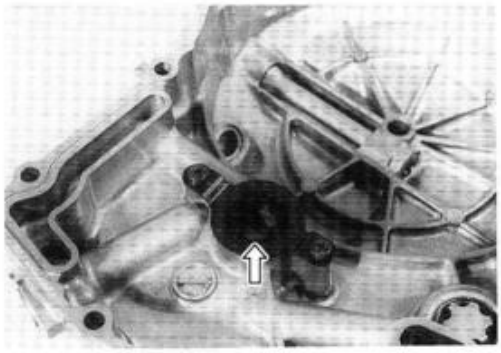

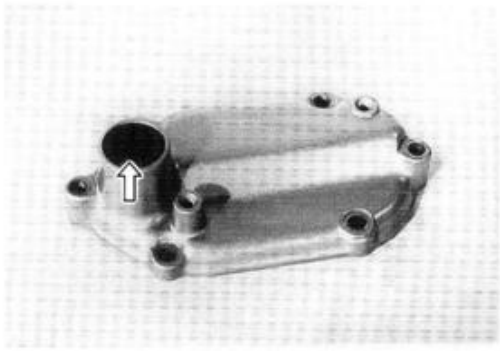

CRANKSHAFT

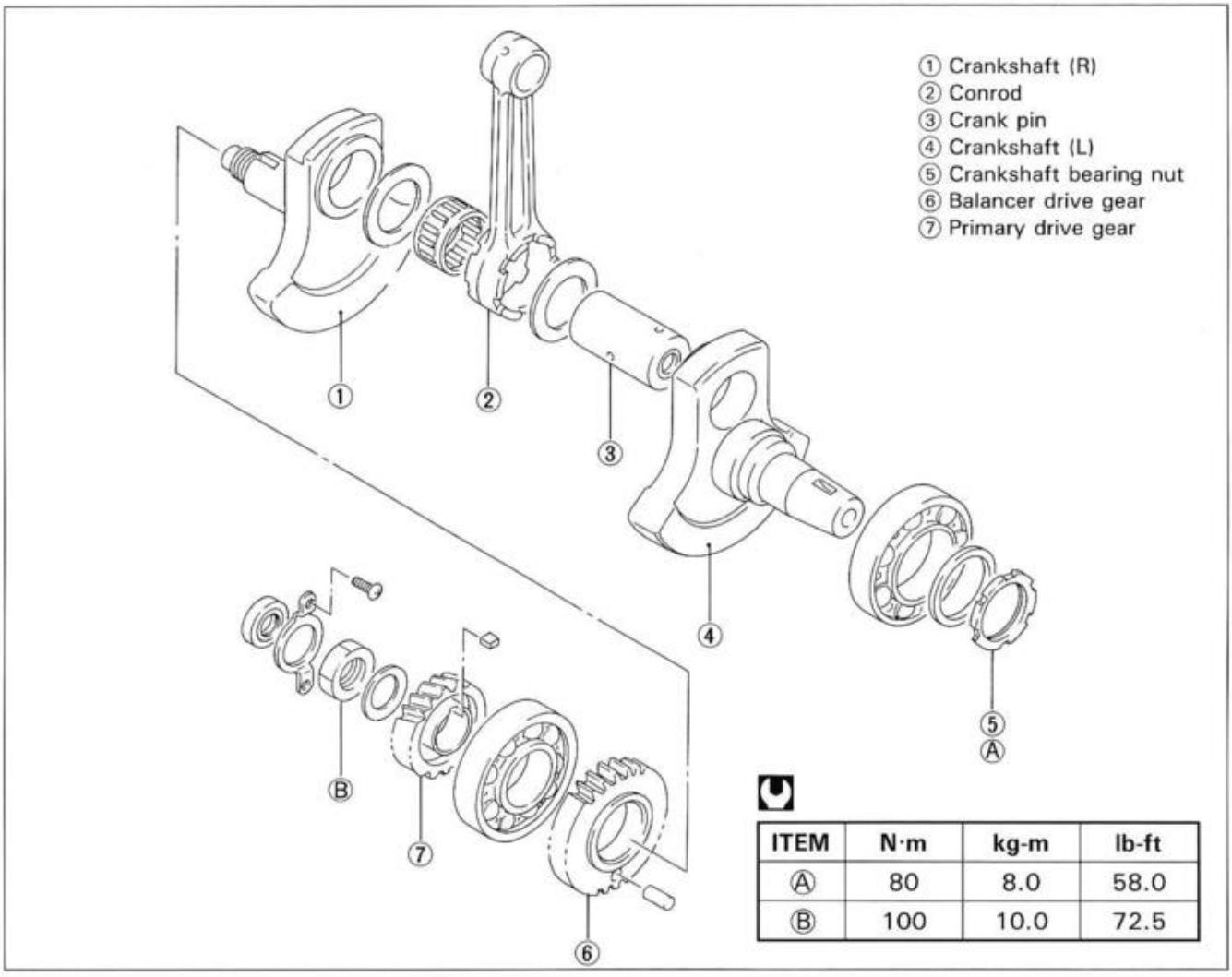

ITEM	N·m	kg-m	lb-ft
Ⓐ	80	8.0	58.0
Ⓑ	100	10.0	72.5

- Decide the width between the webs referring to the figure below when rebuilding the crankshaft.

STD width between webs: 71.0 ± 0.1 mm (2.795 ± 0.004 in)

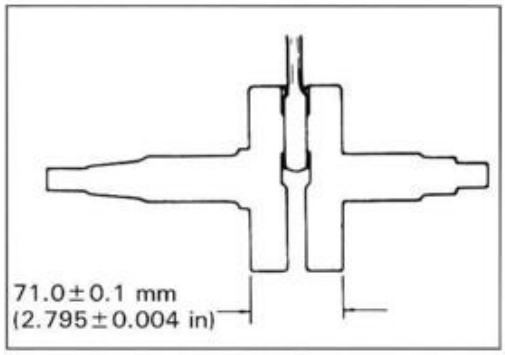

- When mounting the crankshaft in the crankcase, it is necessary to pull its right end into the crankcase.

TOOL **09910-32812: Crankshaft installer**
09910-32830: Attachment
09910-32860: Attachment

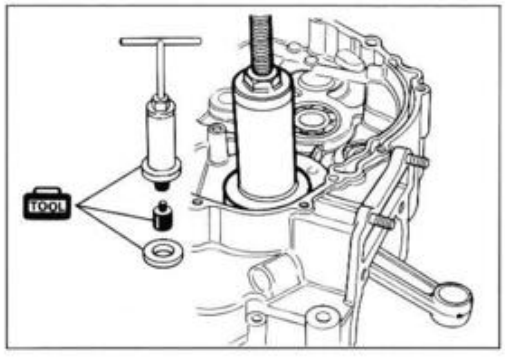

⚠ CAUTION

Never fit the crankshaft into the crankcase by striking it with a plastic hammer.
Always use the special tool, otherwise crankshaft alignment accuracy will be affected.

BALANCERSHAFT

- When installing the balancershaft, align the punched marks (①, ②) on the balancer drive gear and driven gear.

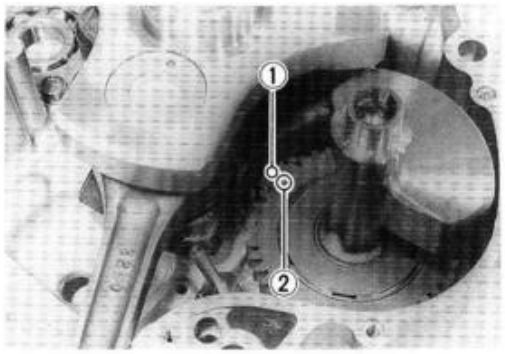

GEARSHIFT MECHANISM

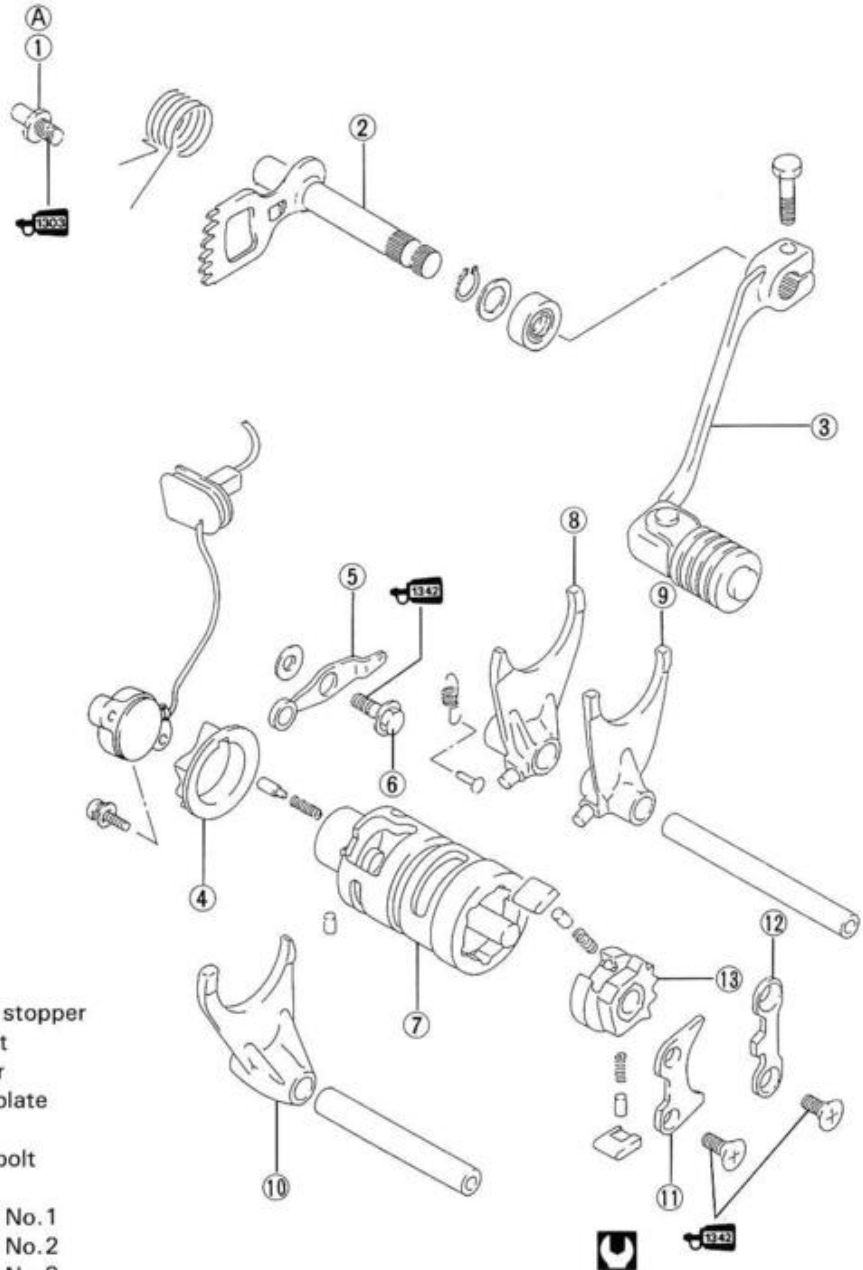

① Gearshift arm stopper
② Gearshift shaft
③ Gearshift lever
④ Cam stopper plate
⑤ Cam stopper
⑥ Cam stopper bolt
⑦ Gearshift cam
⑧ Gearshift fork No.1
⑨ Gearshift fork No.2
⑩ Gearshift fork No.3
⑪ Pawl lifter
⑫ Cam guide
⑬ Cam driven gear

ITEM	N·m	kg-m	lb-ft
Ⓐ	19	1.9	13.5

- After installing the countershaft assembly and driveshaft assembly into the right crankcase, fit the gearshift forks ①, ② and ③ into the gearshift fork grooves.

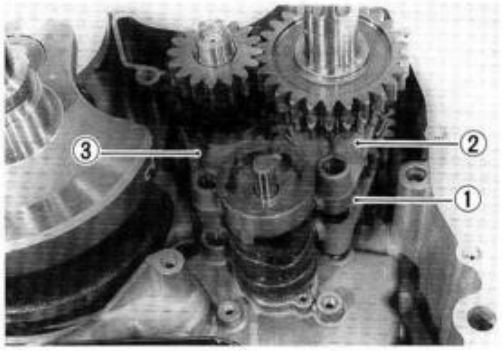

① For Top driven gear (No.1)
② For 4th driven gear (No.2)
③ For 3rd drive gear (No.3)

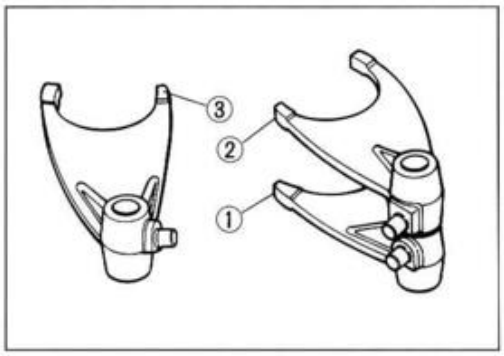

NOTE:
Three kinds of gearshift forks, ①, ② and ③ are used. They resemble each other very closely in external appearance and configuration.
Carefully examine the illustration for correct installing positions and directions.

- Position the gearshift cam as shown in photo so that the gearshift fork shafts can be installed easily.

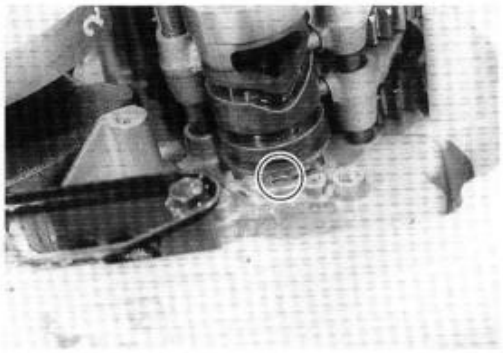

NOTE:
When replacing the gearshift cam stopper bolt ④, apply a small quantity of THREAD LOCK "1342" to the threaded part of the bolt.

1342 99000-32050: THREAD LOCK "1342"

- Hook the gearshift cam stopper spring.

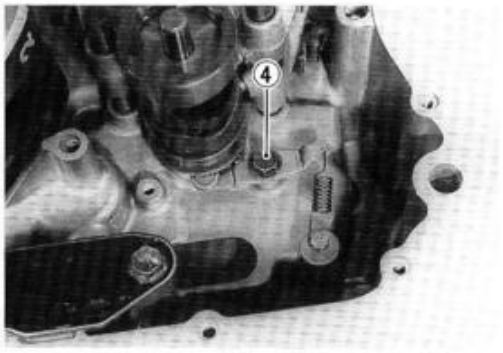

CRANKCASE

When reassembling the crankcase pay attention to the following points:

- Remove sealant material on the mating surfaces of right and left halves of crankcase and thoroughly remove oil stains.
- Apply SUZUKI BOND NO.1207B uniformly to the mating surface of the left half of the crankcase, and assemble the cases within few minutes.

1207B 99104-31140: SUZUKI BOND NO.1207B

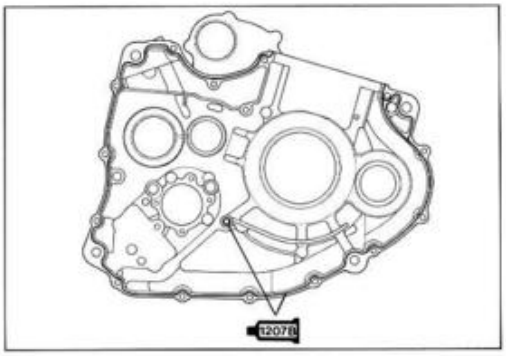

- Fit the dowel pins ① on the right half as shown in photo.
- Apply engine oil to conrod big end of the crankshaft and all parts of the transmission gears.

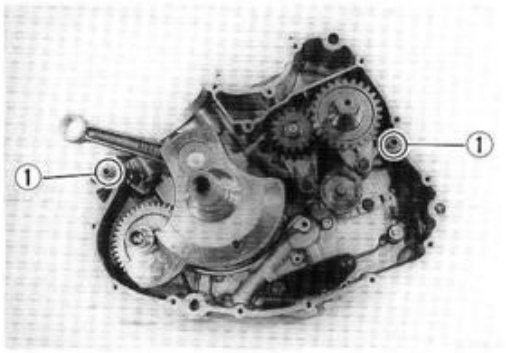

- After the crankcase bolts have been tightened, check if driveshaft and countershaft rotate smoothly.

Crankcase bolt: 11 N·m (1.1 kg-m, 8.0 lb-ft)

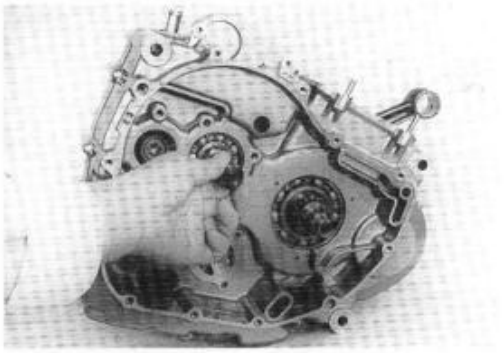

- If a large resistance is felt to rotation, try to free the shafts by tapping the driveshaft or countershaft with a plastic hammer.

CAM DRIVEN GEAR

- Install the gearshift pawls into the cam driven gear. The large shoulder Ⓐ must face to the outside as shown in the illustration.
- When installing the cam guide ② and pawl lifter ③, apply a small quantity of THREAD LOCK "1342" to the securing screws ④.

1342 99000-32050: THREAD LOCK "1342"

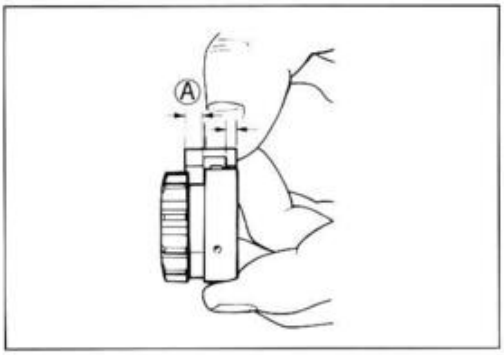

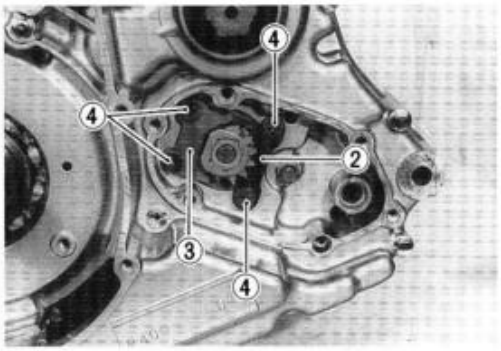

GEARSHIFT SHAFT

- Fit a spring to the gearshift shaft correctly.
- Install the gearshift shaft. Match the center teeth of the gear on the gearshift shaft with the center teeth on the cam driven gear as shown.

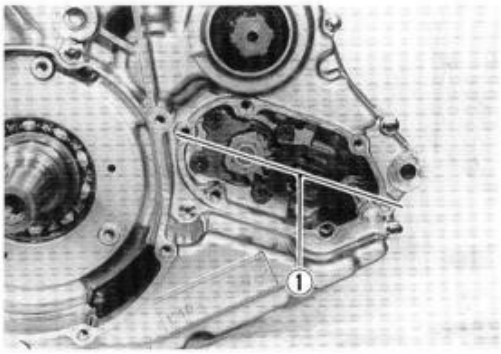

NOTE:
When replacing the gearshift arm stopper ①, apply a small quantity of THREAD LOCK SUPER "1303" to its threaded part and tighten it to the specified torque. (See page 7-24.)

1303 99000-32030: THREAD LOCK SUPER "1303"

- Fit the dowel pins ② and new gasket.

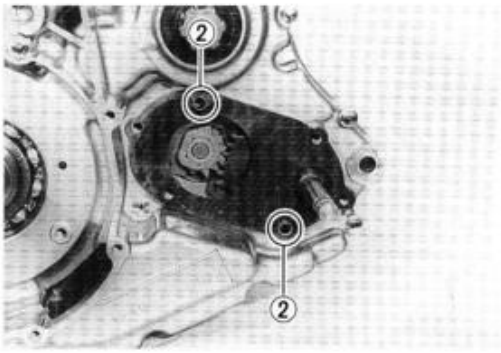

- Fit the gearshift cover and tighten the bolts diagonally.

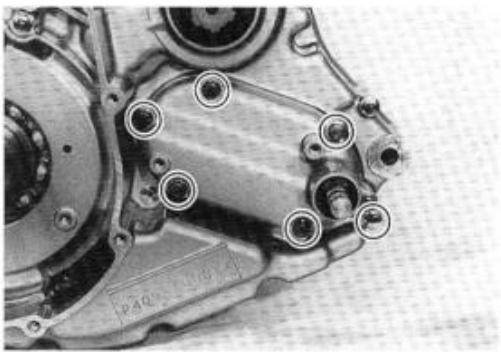

NOTE:
After the gearshift cover and gearshift lever have been fitted, confirm that gear change is normal while turning the countershaft and driveshaft. If gear change is not obtained, it means that assembly of gears or installation of gearshift fork is incorrect. If this is the case, disassemble and trace the mistake.

NEUTRAL POSITION INDICATOR SWITCH

- Install the neutral position indicator switch spring ③ and switch contact ④.

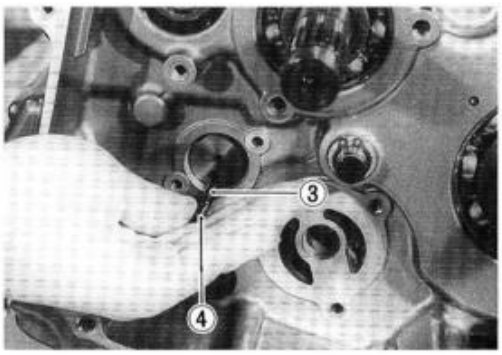

- Install the neutral position indicator switch with two screws.
- Install the breather cover.

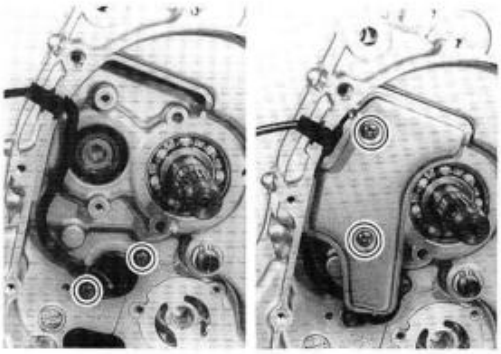

OIL PUMP

- Before mounting oil pump, apply engine oil to the sliding surfaces of the case, outer rotor, inner rotor and shaft.
- Apply a small quantity of THREAD LOCK "1342" to the oil pump mounting screws.

1342 99000-32050: THREAD LOCK "1342"

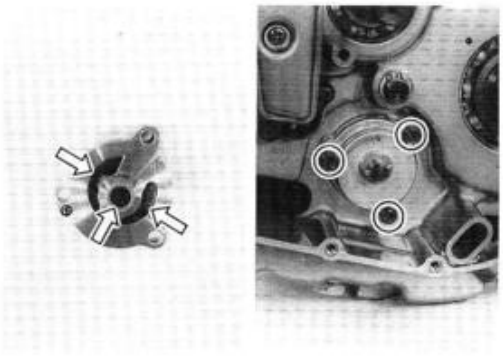

- Tighten the oil pump mounting screws.

- Fix the oil pump driven gear with the circlip.

NOTE:
After installing the oil pump driven gear, rotate the pump gear by hand to see if it turns smoothly.

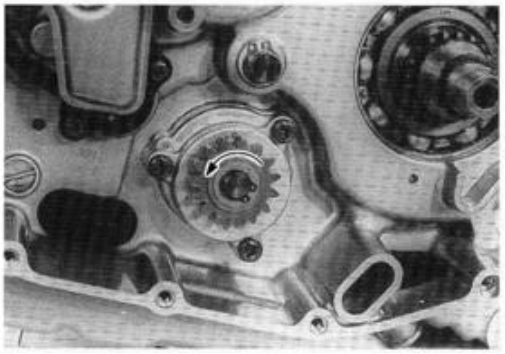

- Fix the idle gear with the circlip.

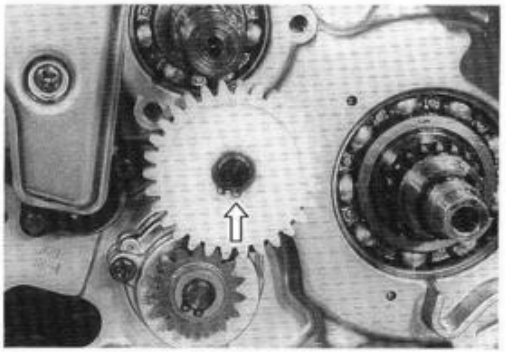

CAM DRIVE CHAIN AND PRIMARY DRIVE GEAR

- Engage the cam drive chain.
- Fit the key ① in the key slot on the crankshaft, then install the primary drive gear and nut.

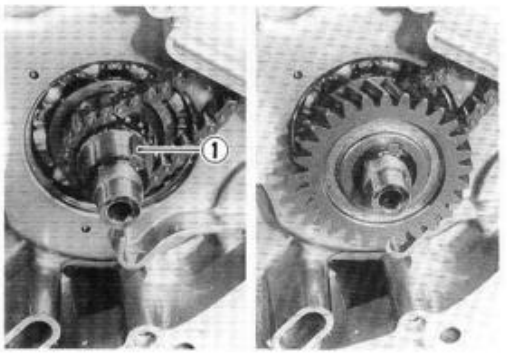

- Tighten the primary drive gear nut to the specified torque with the special tool.

TOOL 09910-20116: Conrod holder

Primary drive gear nut: 100 N·m (10.0 kg-m, 72.5 lb-ft)

NOTE:
This nut has left-hand thread nut.

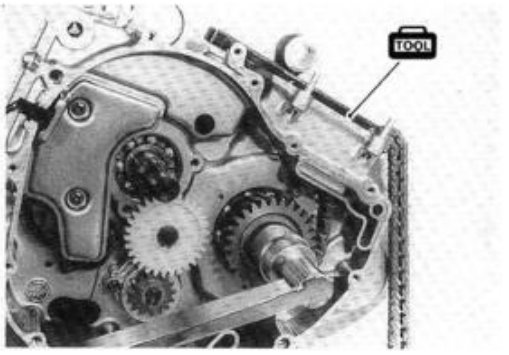

CLUTCH

① Clutch release arm
② Clutch release pinion
③ Clutch release rack
④ Clutch pressure plate
⑤ Clutch sleeve hub
⑥ Washer seat
⑦ Concaved washer
⑧ Clutch driven plate No.2 (Thicker plate, 1 pc)
⑨ Stopper ring
⑩ Clutch drive plate No.2 (1 pc)
⑪ Clutch driven plate No.1 (7 pcs)
⑫ Clutch drive plate No.1 (7 pcs)
⑬ Primary driven gear ass'y

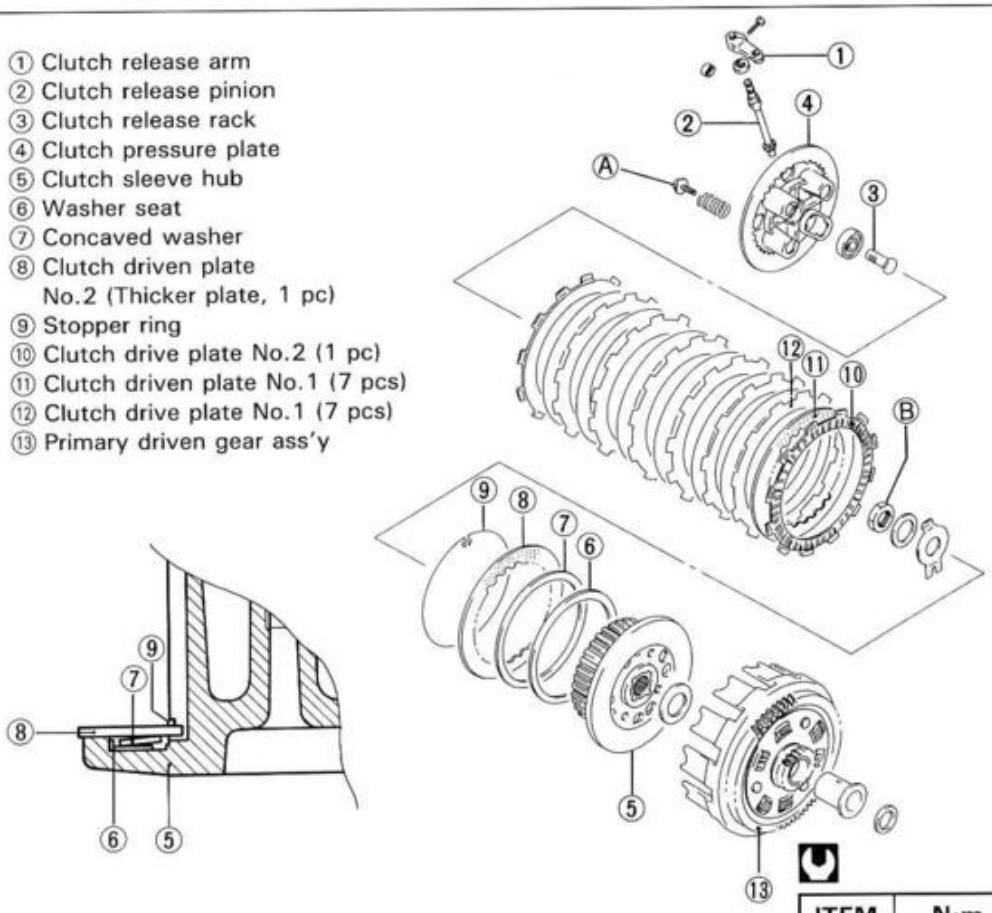

NOTE:
Check to be sure that concaved washer ⑦ is properly installed.

ITEM	N·m	kg-m	lb-ft
Ⓐ	10	1.0	7.0
Ⓑ	50	5.0	36.0

- Install the thrust washer ①.
- Install the spacer with primary driven gear assembly.

NOTE:
When inserting the spacer into the primary driven gear, apply engine oil to both inside and outside of the spacer.

- Install the thrust washer ②.

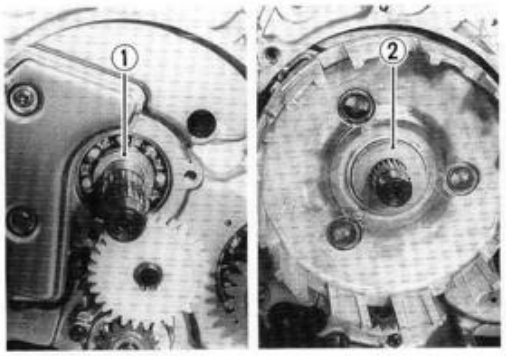

- Install the clutch sleeve hub and lock washer ③.

NOTE:
When installing the lock washer ③, align the slit ④ of lock washer with the rib of clutch sleeve hub.

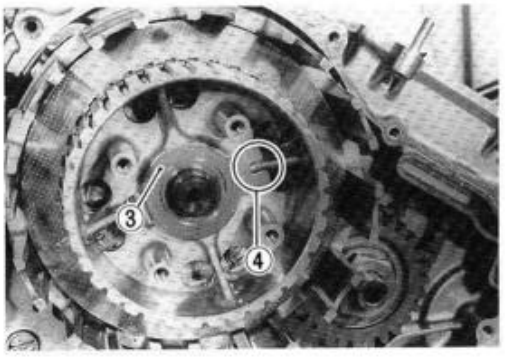

- Tighten the clutch sleeve hub nut to the specified torque with the special tool.

TOOL 09920-53740: Clutch sleeve hub holder

Clutch sleeve hub nut: 50 N·m (5.0 kg-m, 36.0 lb-ft)

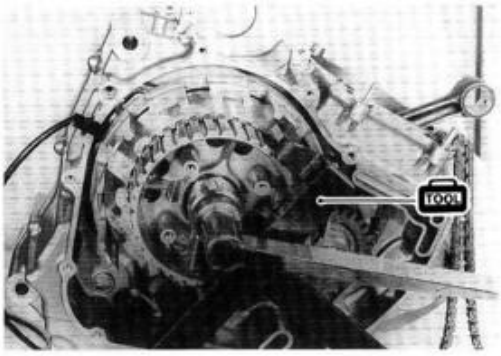

- After tightening the clutch sleeve hub nut, be sure to lock the nut by firmly bending the tongue of the lock washer.
- Install the clutch drive plates and driven plates one by one.
- Install the clutch pressure plate.

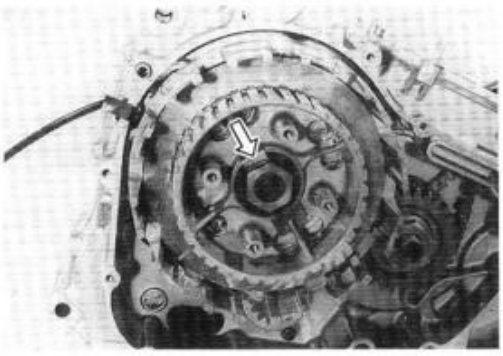

- Tighten the clutch spring mounting bolts diagonally to the specified torque with the special tool.

TOOL 09910-20116: Conrod holder

Clutch spring mounting bolt: 10 N·m (1.0 kg-m, 7.0 lb-ft)

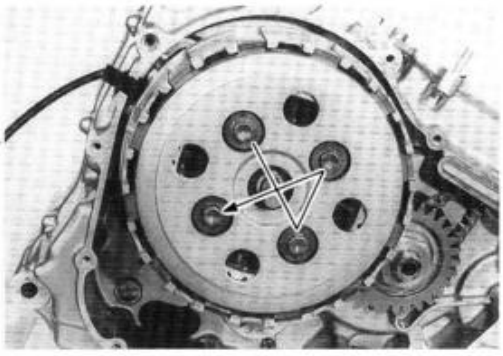

- Fit the dowel pins.

⚠ CAUTION

Use a new gasket to prevent oil leakage.

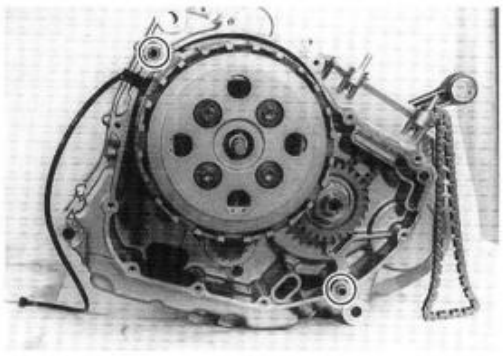

- Engage the teeth of clutch release rack with those of pinion gear at the clutch cover side, and replace clutch cover. Make sure that the rack and pinion gear engage positively. To install the cover, tap lightly with plastic hammer, and tighten the bolts.

①: Gasket

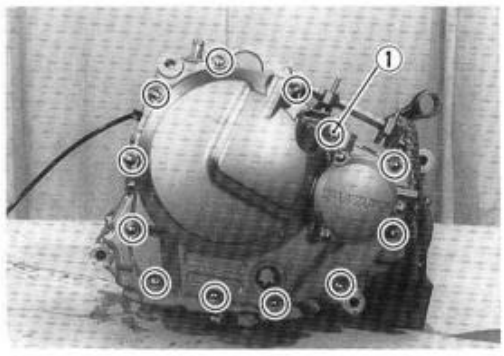

STARTER CLUTCH AND GENERATOR

- Install the crankcase oil separator and spacer ①.

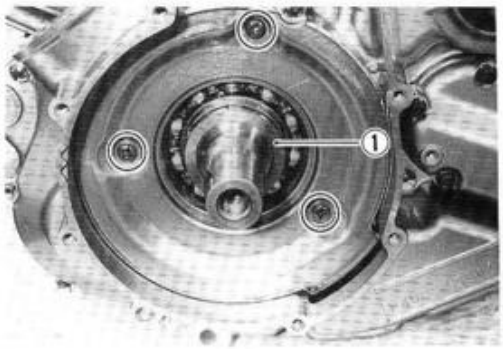

- Tighten the ring nut to the specified torque with the special tools.

09917-23711: Ring nut socket wrench
09910-20116: Conrod holder

Ring nut: 80 N·m (8.0 kg-m, 58.0 lb-ft)

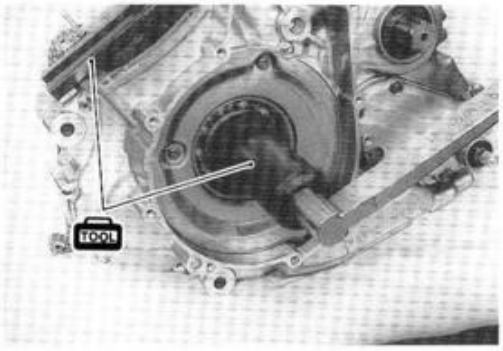

- Install the starter gear and thrust washer.
- Degrease the tapered portion of the generator rotor and also the crankshaft.

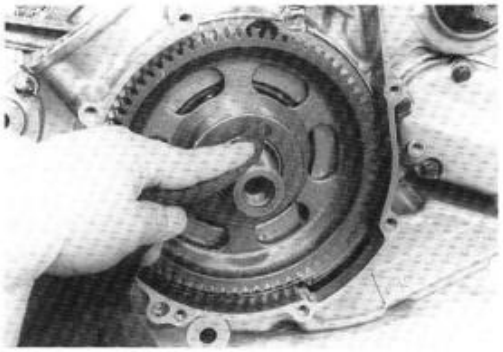

- Fil the key ② in the key slot on the crankshaft, then install the generator rotor.

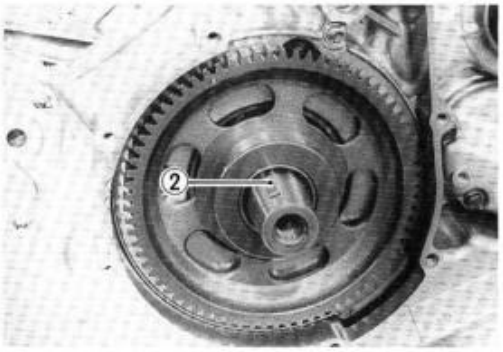

- Apply a small quantity of THREAD LOCK SUPER "1303" to the threaded part of rotor bolt.

99000-32030: THEAD LOCK SUPER "1303"

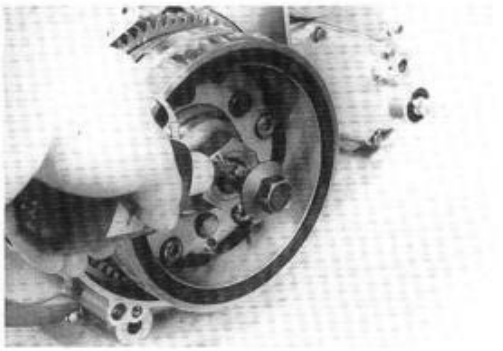

- Tighten the generator rotor bolt to the specified torque with the 36 mm off-set wrench.

Generator rotor bolt: 160 N·m (16.0 kg-m, 115.5 lb-ft)

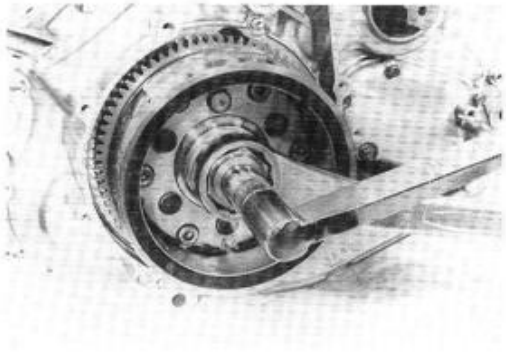

- Install the starter torque limiter and idle gear.
- Install the starter motor.

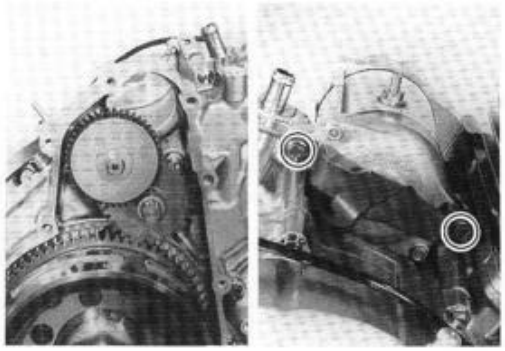

- Fit the dowel pin and install the new gasket.
- Install the generator cover.

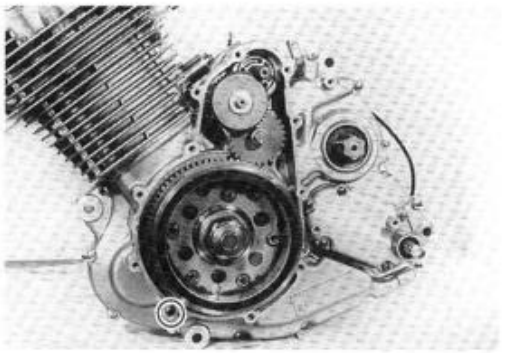

OIL RING

Install the spacer ① into the oil ring groove first. Then install both side rails ②, one on each side of the spacer. The spacer and side rails do not have a specific top or bottom when they are new. When reassembling used parts, install them in their original place and direction.

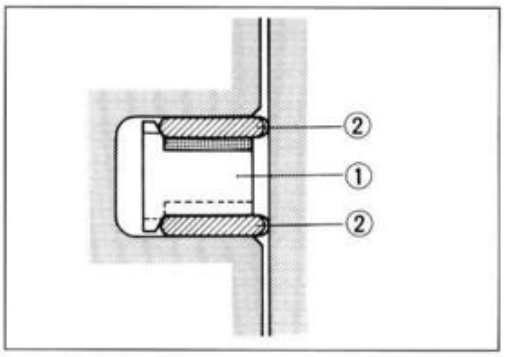

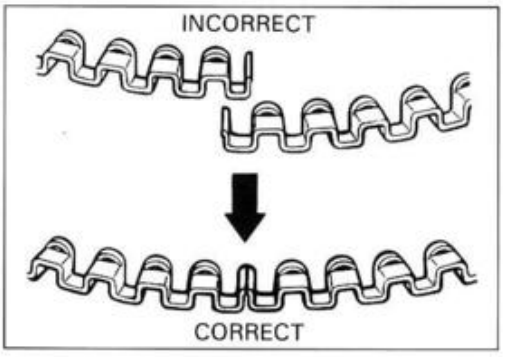

TOP RING AND 2ND RING

Top and 2nd rings differ in the shape of the ring face. Top and 2nd rings have a letter "R" or "RN" marked on the side. Be sure to bring the marked side to top when fitting them to the piston.

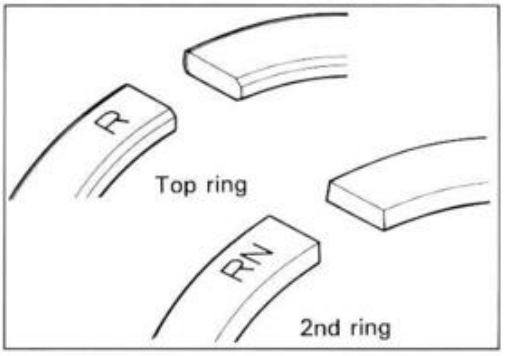

- Position the gaps of the three rings as shown. Before inserting piston into the cylinder, check that the gaps are so located.

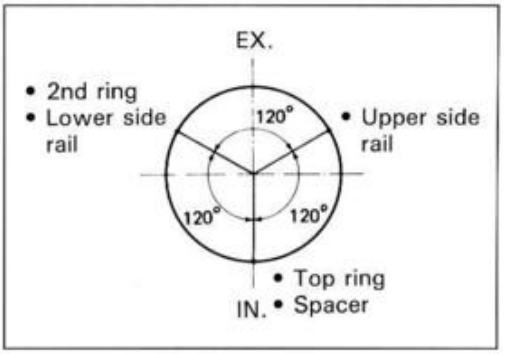

- Place a clean rag over the cylinder base to prevent the piston pin circlips from dropping into the crankcase.
- Rub a small quantity of SUZUKI MOLY PASTE onto the piston pin.

99000-25140: SUZUKI MOLY PASTE

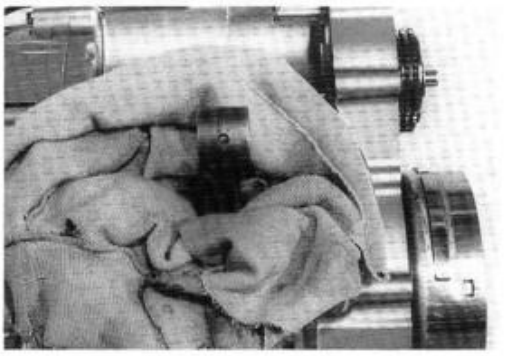

- When fitting the piston, turn arrow mark ① on the piston head to exhaust side.
- Fit the piston pin circlips with long-nose pliers.

⚠ CAUTION

Use new piston pin circlip to prevent circlip failure which will occur with a bent one.

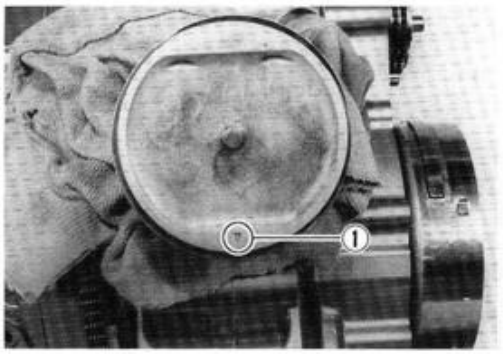

- Fit the dowel pins ② to the crankcase and attach a new gasket.

⚠ CAUTION

Use a new gasket to prevent oil leakage.

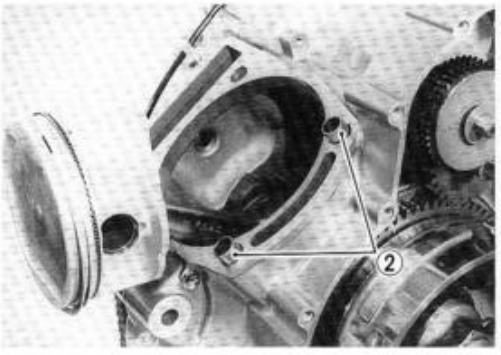

- Hold each piston ring with properly position, and insert the piston into the cylinder.

NOTE:
When mounting the cylinder, keep the camshaft drive chain ① taut. The camshaft drive chain must not be caught between cam drive chain sprocket and crankcase when crankshaft is rotated.

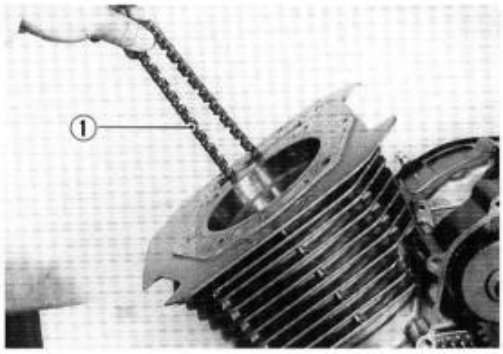

- Install the cam chain guide.

NOTE:
There is a holder for the bottom end of the cam chain guide cast in the crankcase. Be sure that the cam chain guide ② is inserted properly.

- Temporarily tighten the cylinder base nuts.

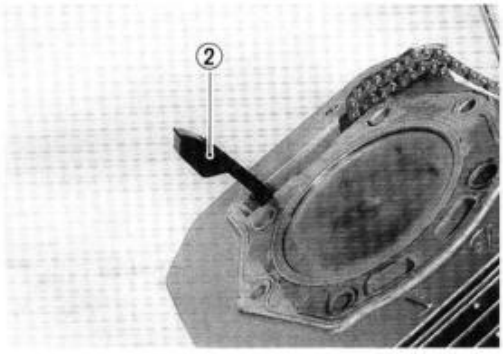

- Fit the dowel pins ③ to the cylinder and attach a new gasket.

⚠ CAUTION

Use a new cylinder head gasket to prevent oil leakage. Do not use the old gasket.

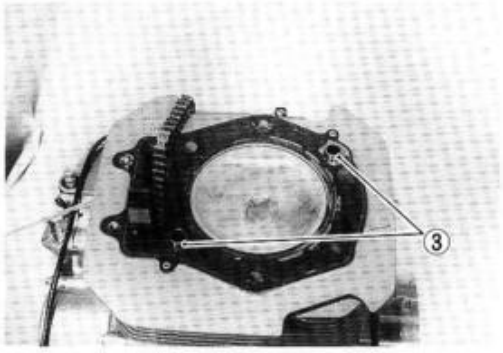

- Place the cylinder head on the cylinder.
- Cylinder head bolts and new gaskets must be fitted in the correct position, as shown in the photograph.

Ⓐ: 200 mm bolt
Ⓑ: 190 mm bolt
Ⓒ: 180 mm bolt

NOTE:
Apply engine oil to the new gaskets before installing.

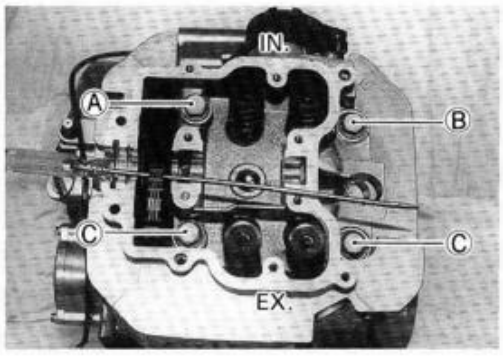

- Fasten the cylinder head by tightening the bolts and nuts diagonally. Tighten each bolt and nut to the specified torque.

Cylinder head bolt: 38 N·m (3.8 kg-m, 27.5 lb-ft)
Cylinder head nut: 25 N·m (2.5 kg-m, 18.0 lb-ft)

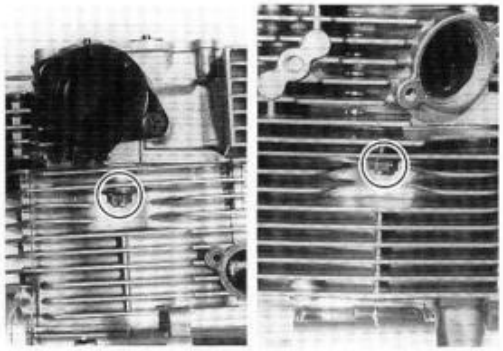

- After tightening the cylinder head bolts and nuts, tighten the cylinder base nut to the specified torque.

Cylinder base nut: 10 N·m (1.0 kg-m, 7.0 lb-ft)

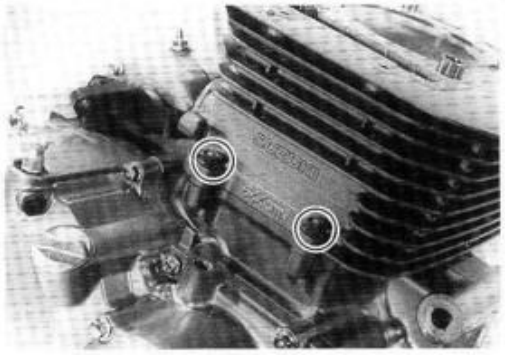

CAMSHAFT

- Turn the crankshaft counterclockwise with the box wrench and align "T" line ① on the generator rotor with the center of hole on the generator cover keeping the camshaft drive chain pulled upward.

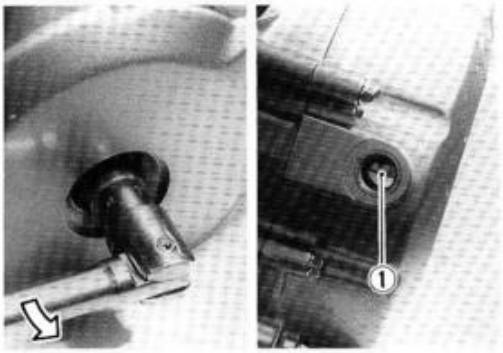

⚠ CAUTION

If crankshaft is turned without drawing the camshaft drive chain upward, the chain will be caught between crankcase and cam chain drive sprocket.

- Install the C-ring ② into the ring groove of the cylinder head.

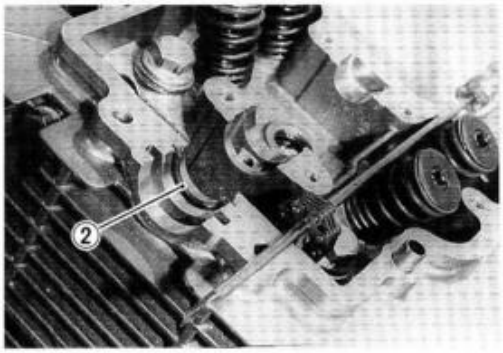

NOTE:
Apply grease on the cam sprocket locating pin and install the pin into the camshaft.

- Engage the chain on the cam sprocket with the locating pin hole ③ at two o'clock position.

NOTE:
Do not rotate the generator rotor while doing this. When the sprocket is not positioned correctly, turn the sprocket. When installing the camshaft into the cam sprocket, pay attention not to dislodge the locating pin or it may fall into the crankcase.

- Align the engraved line mark ④ on the camshaft so it is parallel with the surface of the cylinder head.

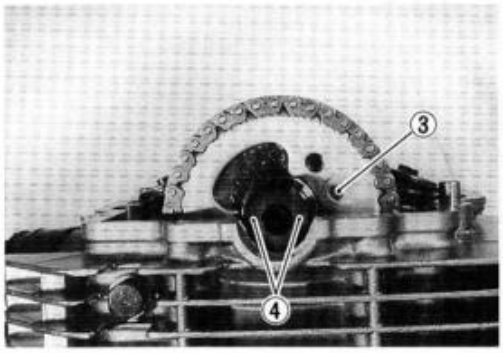

- Fit the lock washer so that it is covering the locating pin.
- Apply THREAD LOCK SUPER "1303" to the cam sprocket bolts and tighten them to the specified torque.

Cam sprocket bolt: 15 N·m (1.5 kg-m, 11.0 lb-ft)

99000-32030: THREAD LOCK SUPER "1303"

- Bend up the washer tongue positively to lock the bolts.

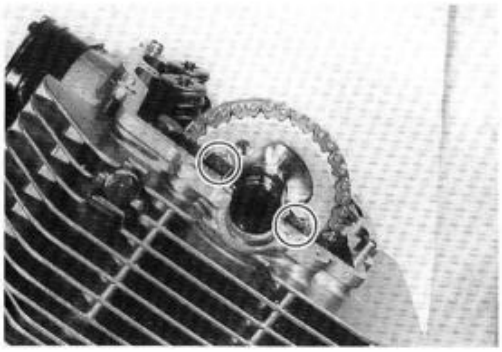

- Apply SUZUKI MOLY PASTE to the camshaft journals and cam faces.

99000-25140: SUZUKI MOLY PASTE

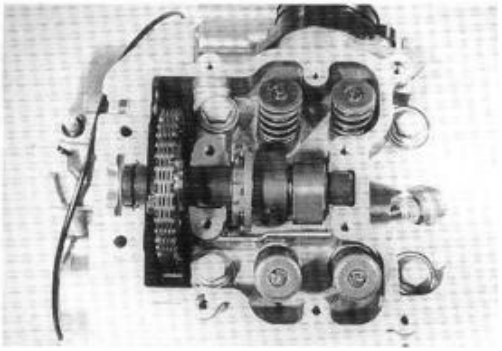

- Thoroughly wipe off oil from the fitting surfaces of cylinder head and cover.
- Fit the dowel pins ① and camshaft end cap ② to the cylinder head side.

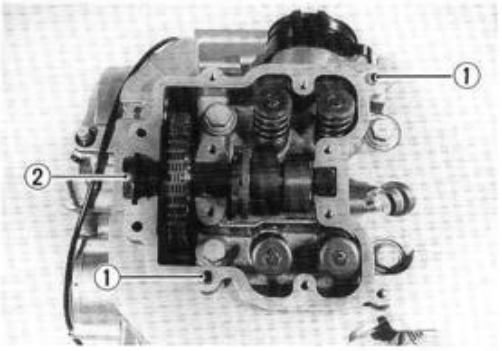

- Apply SUZUKI BOND NO.1207B uniformly to the mating surface of the cylinder head cover, and install the cylinder head cover within few minutes.

99104-31140: SUZUKI BOND NO. 1207B

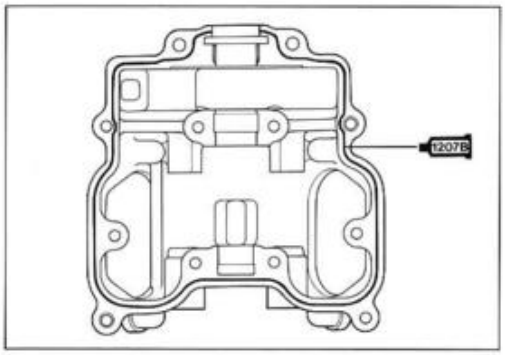

- Fit the two gaskets ③ to the head cover bolts correctly as shown in Fig.

⚠ CAUTION

Use a new gasket to prevent oil leakage.

NOTE:
When tightening the cylinder head cover bolts, the piston must be at top dead center on the compression stroke.

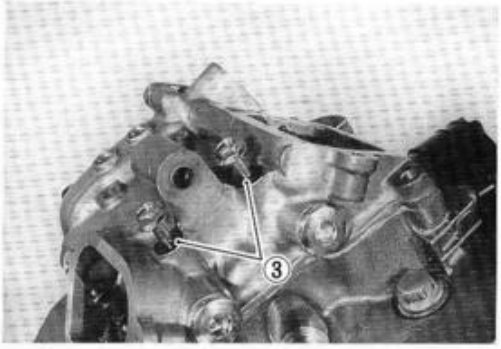

- Lightly tighten the cylinder head cover bolts sequentially in the ascending order of numbers, and then if everything is satisfactory, tighten securely with a torque wrench to the specified torque.

Cylinder head cover bolt: 10 N·m (1.0 kg-m, 7.0 lb-ft)

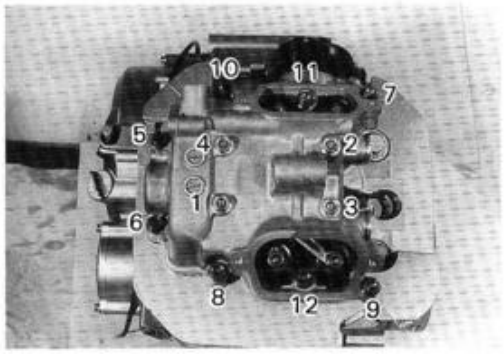

- Turn the slotted end of the chain tensioner adjuster to lock it with a screwdriver in the clockwise direction.
- Install the chain tensioner adjuster on the cylinder.

Cam chain tensioner adjuster mounting bolt ①: 10 N·m (1.0 kg-m, 7.0 lb-ft)

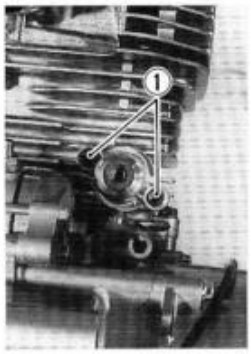

- Turn back and pull out the screwdriver from the chain tensioner adjuster. As the cylinder turns, the tensioner rod is advanced under spring force and pushes the tensioner against the cam drive chain.

NOTE:
The cam drive chain tensioner adjuster is maintained at the proper tension by an automatically adjusted tensioner. Before installing the cam drive chain tensioner adjuster, inspect the smooth movement.

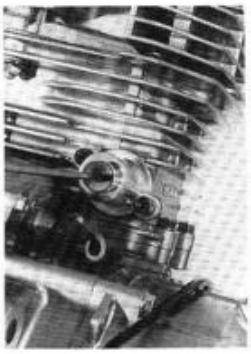

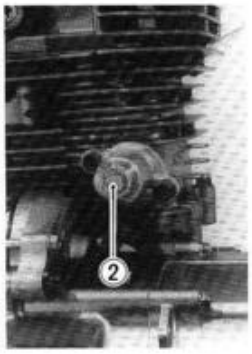

- Tighten the tensioner adjuster cap bolt ②.

Bolt ②: 6 N·m (0.6 kg-m, 4.5 lb-ft)

- Install the oil pipe and tighten the union bolt to the specified torque.

Oil pipe union bolt ③: 23 N·m (2.3 kg-m, 16.5 lb-ft)
④: 20 N·m (2.0 kg-m, 14.5 lb-ft)

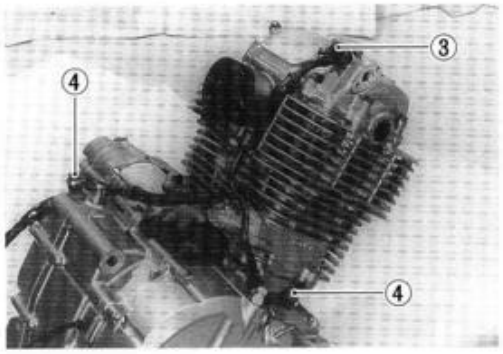

IMPORTANT NOTICE !

If this manual was not purchased from manualcd then you will be missing important pages and also have some features locked. To insure you have the complete manual only buy from manualcd

If this manual was not purchased from manualcd please contact us and we will inform you of what pages are missing and which features are locked.

manualcd@hotmail.com

FUEL AND LUBRICATION SYSTEM

CONTENTS

FUEL SYSTEM 4- 1
FUEL VALVE 4- 2
FUEL TANK 4- 3
CARBURETOR 4- 4
CONSTRUCTION 4- 4
SPECIFICATIONS 4- 5
I.D. NO. LOCATION 4- 6
SLOW SYSTEM 4- 7
MAIN SYSTEM 4- 8
STARTER SYSTEM 4- 9
FLOAT SYSTEM 4- 9
REMOVAL 4-10
DISASSEMBLY 4-10
CARBURETOR CLEANING 4-11
INSPECTION 4-13
NEEDLE VALVE INSPECTION 4-13
FLOAT HEIGHT ADJUSTMENT 4-13
THROTTLE POSITION SWITCH 4-13
REASSEMBLY AND REMOUNTING 4-14
LUBRICATION SYSTEM AND COOLING SYSTEM 4-14
ENGINE LUBRICATION/CYLINDER HEAD COOLING SYSTEM CHART 4-15
OIL COOLER 4-17

FUEL SYSTEM

When turning starter motor, negative pressure is generated in the combustion chamber. This negative pressure works on the diaphragm of fuel valve through passage way provided in the carburetor main bore and vacuum hose, and diaphragm builds up a negative pressure which is higher than the spring pressure. Valve in the fuel valve is forced to open due to diaphragm operation, and thus allows fuel to flow into carburetor float chamber.

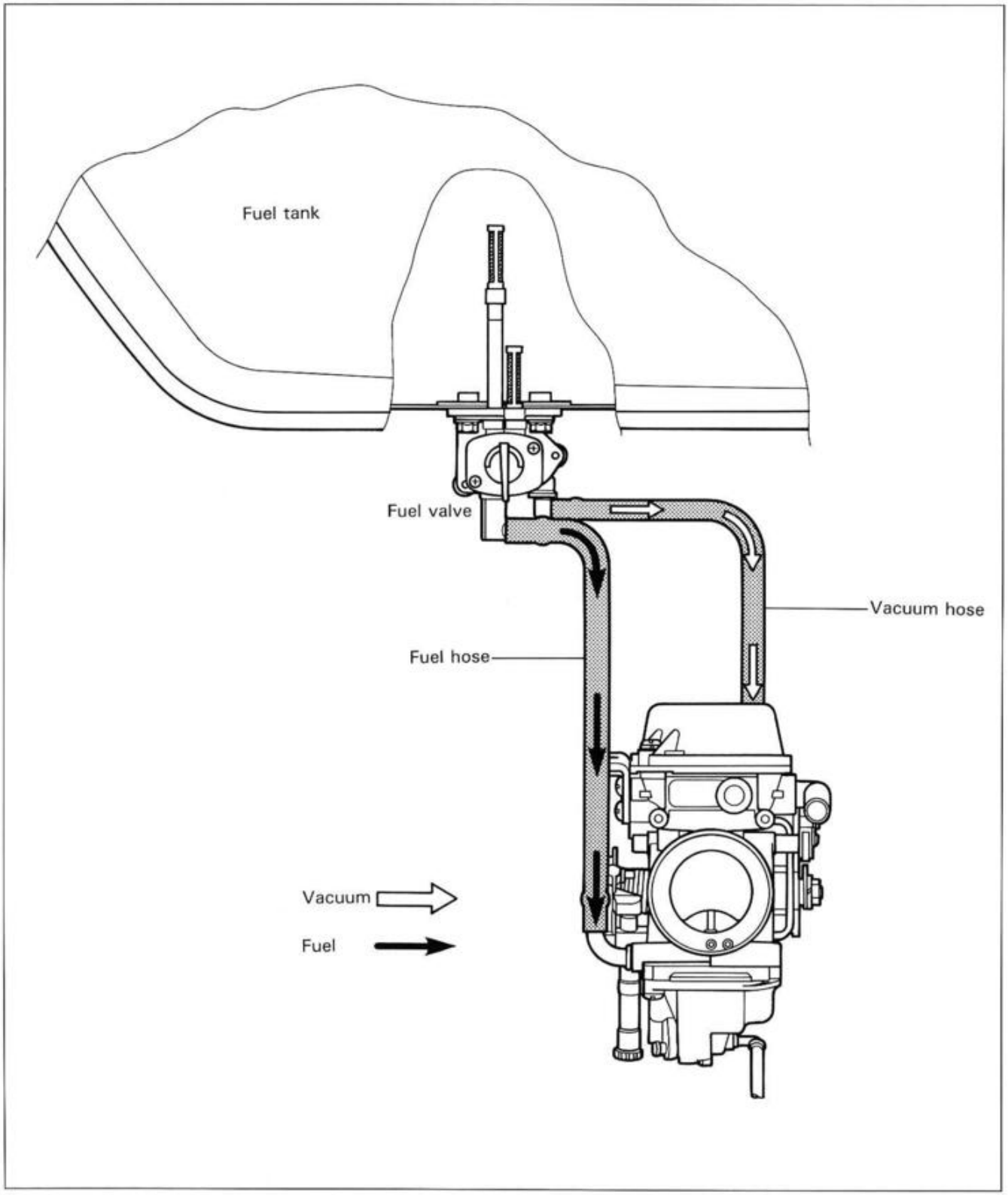

FUEL VALVE

FUEL VALVE MECHANISM

A valve is provided at the end of the fuel valve lever and can switch over to "ON", "PRI" and "RES".

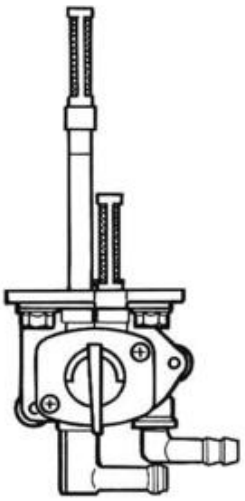

"ON" position

"PRI" position

"RES" position

FUEL VALVE/FUEL FILTER REMOVAL

- Remove the frame cover and seat. (Refer to pages 5-1 and 2.)
- Remove the fuel tank. (Refer to page 4-3.)
- Remove the fuel valve by removing the mounting bolts.

⚠ WARNING

Gasoline is very explosive. Extreme care must be taken. Gaskets and O-ring must be replaced with new ones to prevent fuel leakage.

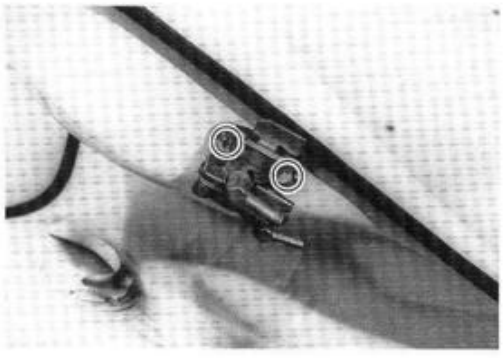

INSPECTION AND CLEANING

If the fuel filter is dirty with sediment or rust, fuel will not flow smoothly and loss in engine power may result. Clean the fuel filter with compressed air.

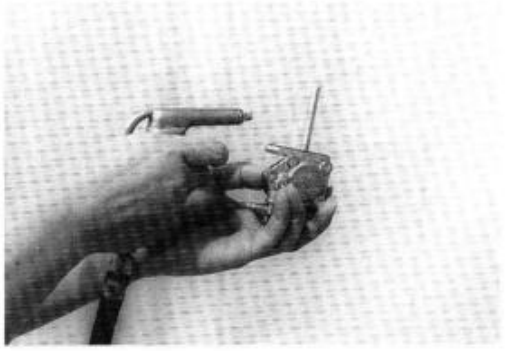

FUEL TANK

FUEL TANK REMOVAL

- Remove the frame cover and seat. (Refer to pages 5-1 and 2.)
- Turn the fuel valve to "ON" position.

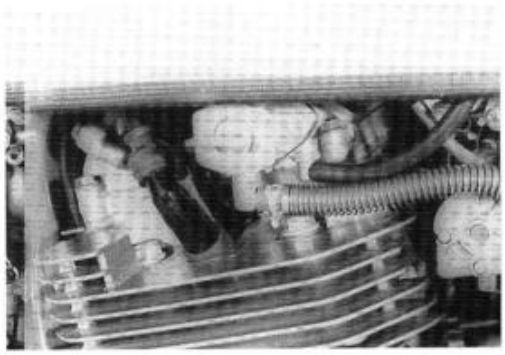

- Remove the fuel tank mounting bolts ①.
- Slide the fuel tank backward and lift up it after disconnecting the fuel hose ② and vacuum hose ③.
- Remove the fuel tank.

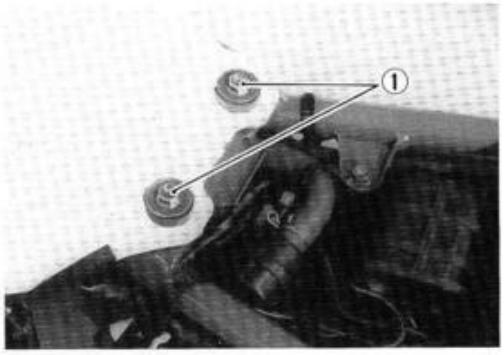

⚠ WARNING

Gasoline is very explosive. Extreme care must be taken.

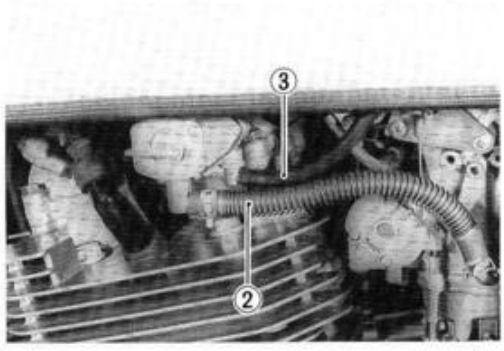

CARBURETOR

CONSTRUCTION

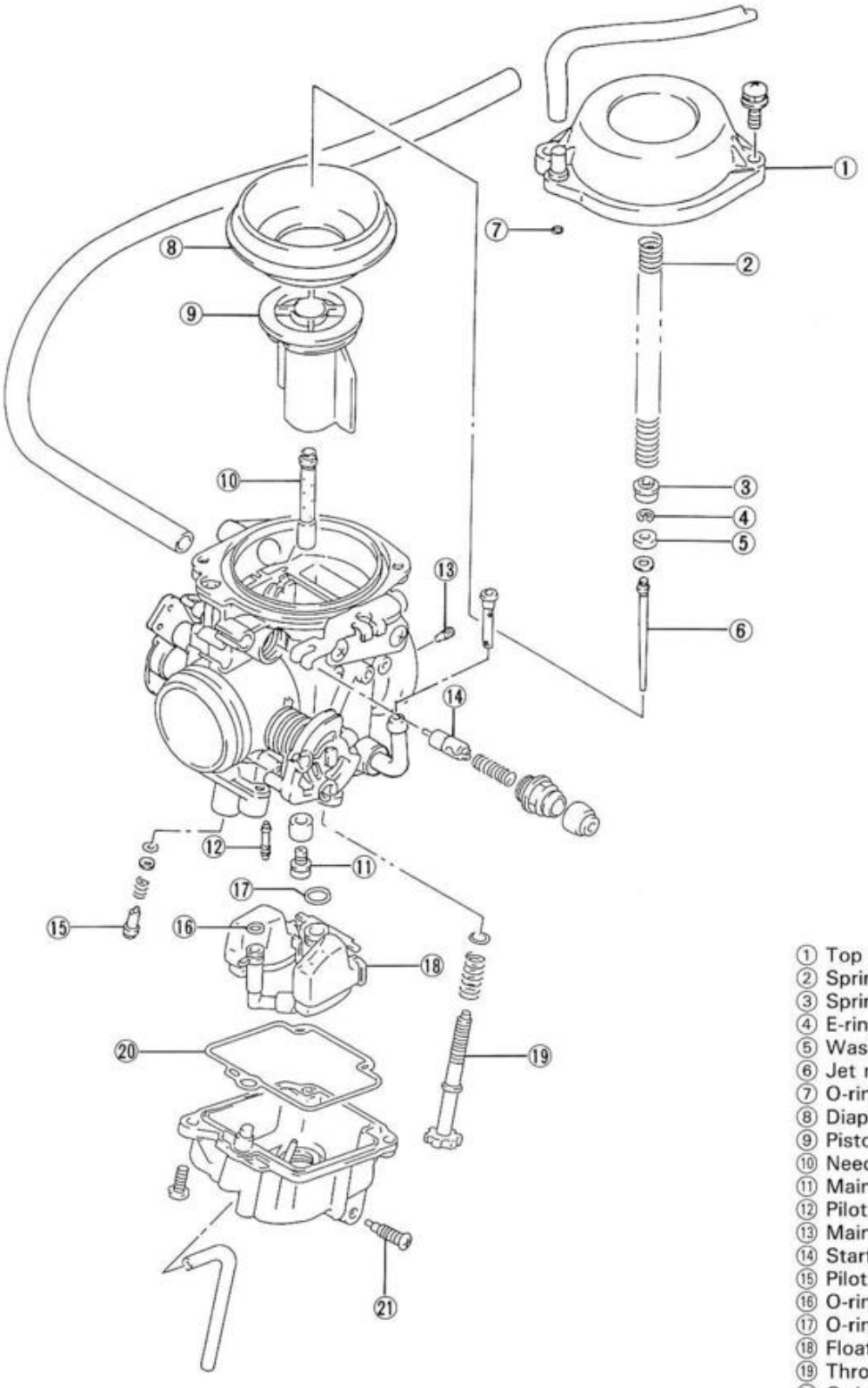

① Top cap
② Spring
③ Spring seat
④ E-ring
⑤ Washer
⑥ Jet needle
⑦ O-ring
⑧ Diaphragm
⑨ Piston valve
⑩ Needle jet
⑪ Main jet
⑫ Pilot jet
⑬ Main air jet
⑭ Starter plunger
⑮ Pilot screw
⑯ O-ring
⑰ O-ring
⑱ Float
⑲ Throttle stop screw
⑳ O-ring
㉑ Drain screw

SPECIFICATIONS

ITEM		SPECIFICATION			
		E-02,04,34	E-37	E-17,22,24	U-type E-22
Carburetor type		MIKUNI BST40SS	←	←	←
Bore size		40 mm	←	←	←
I.D. No.		32E0	32E8	32E3	32E4
Idle r/min.		1 500 ± 100 r/min	←	←	←
Float height		14.7 ± 1.0 mm (0.58 ± 0.04 in)	←	←	←
Main jet	(M.J.)	#140	←	←	←
Jet needle	(J.N.)	6F19-3rd	←	←	←
Needle jet	(N.J.)	Y-5	←	←	←
Throttle valve	(Th.V.)	#95	←	←	←
Pilot jet	(P.J.)	#42.5	←	←	←
Starter jet	(G.S.)	#40	←	←	←
Pilot screw	(P.S.)	PRE-SET (1½ turns back)	←	PRE-SET (1.0 turn back)	PRE-SET (1⅛ turns back)
Throttle cable play (pulling cable)		0.5—1.0 mm (0.02—0.04 in)	←	←	←
Starter cable play		0.5—1.0 mm (0.02—0.04 in)	←	←	←

COUNTRY OR AREA

E-02 : U.K.
E-03 : U.S.A.
E-04 : France
E-17 : Sweden
E-18 : Switzerland
E-22 : Germany
E-24 : Australia
E-28 : Canada
E-33 : California (U.S.A.)
E-34 : Italy
E-37 : Brazil

ITEM	SPECIFICATION			
	E-03	E-33	E-28	E-18
Carburetor type	MIKUNI BST40SS	←	←	←
Bore size	40 mm	←	←	←
I.D. No.	32E1	32E6	32E5	32E2
Idle r/min.	1 500 ± 100 r/min	←	←	1 500 ± 50 r/min
Float height	14.7 ± 1.0 mm (0.58 ± 0.04 in)	←	←	←
Main jet (M.J.)	#140	←	#140	#137.5
Jet needle (J.N.)	6F23	←	6F19-3rd	6H21-4th
Needle jet (N.J.)	Y-5M	←	Y-5	←
Throttle valve (Th.V.)	#95	←	←	←
Pilot jet (P.J.)	#42.5	←	#42.5	←
Starter jet (G.S.)	#40	←	←	←
Pilot screw (P.S.)	PRE-SET	←	PRE-SET (1½ turns back)	PRE-SET (1.0 turn back)
Throttle cable play (pulling cable)	0.5 – 1.0 mm (0.02 – 0.04 in)	←	←	←
Starter cable play	0.5 – 1.0 mm (0.02 – 0.04 in)	←	←	←

I.D. NO. LOCATION

Each carburetor has I.D. Number ① printed on the carburetor body according to its specification.

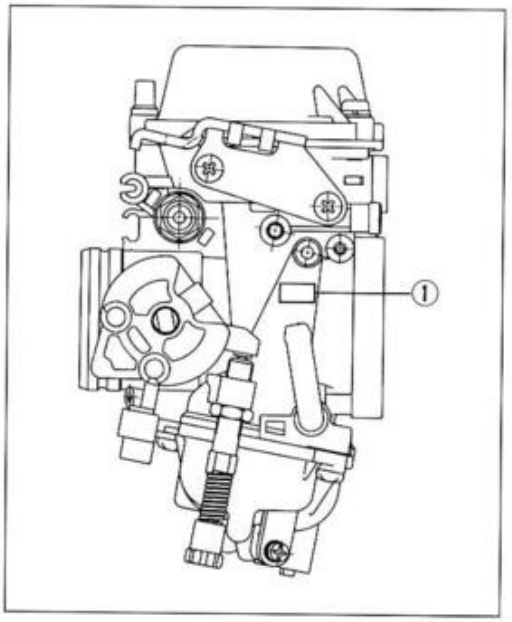

SLOW SYSTEM

This system supplies fuel during engine operation with throttle valve ① closed or slight opened. The fuel from float chamber ② is metered by pilot jet ③ where it mixes with air coming in through pilot air jet ④ . This mixture, rich with fuel, then goes up through pilot passage to pilot screw ⑤ . A part of the mixture is discharged into the main bore out of bypass ports ⑥ . The remainder of mixture is metered by pilot screw ⑤ and sprayed out into the main bore through pilot outlet ⑦ .

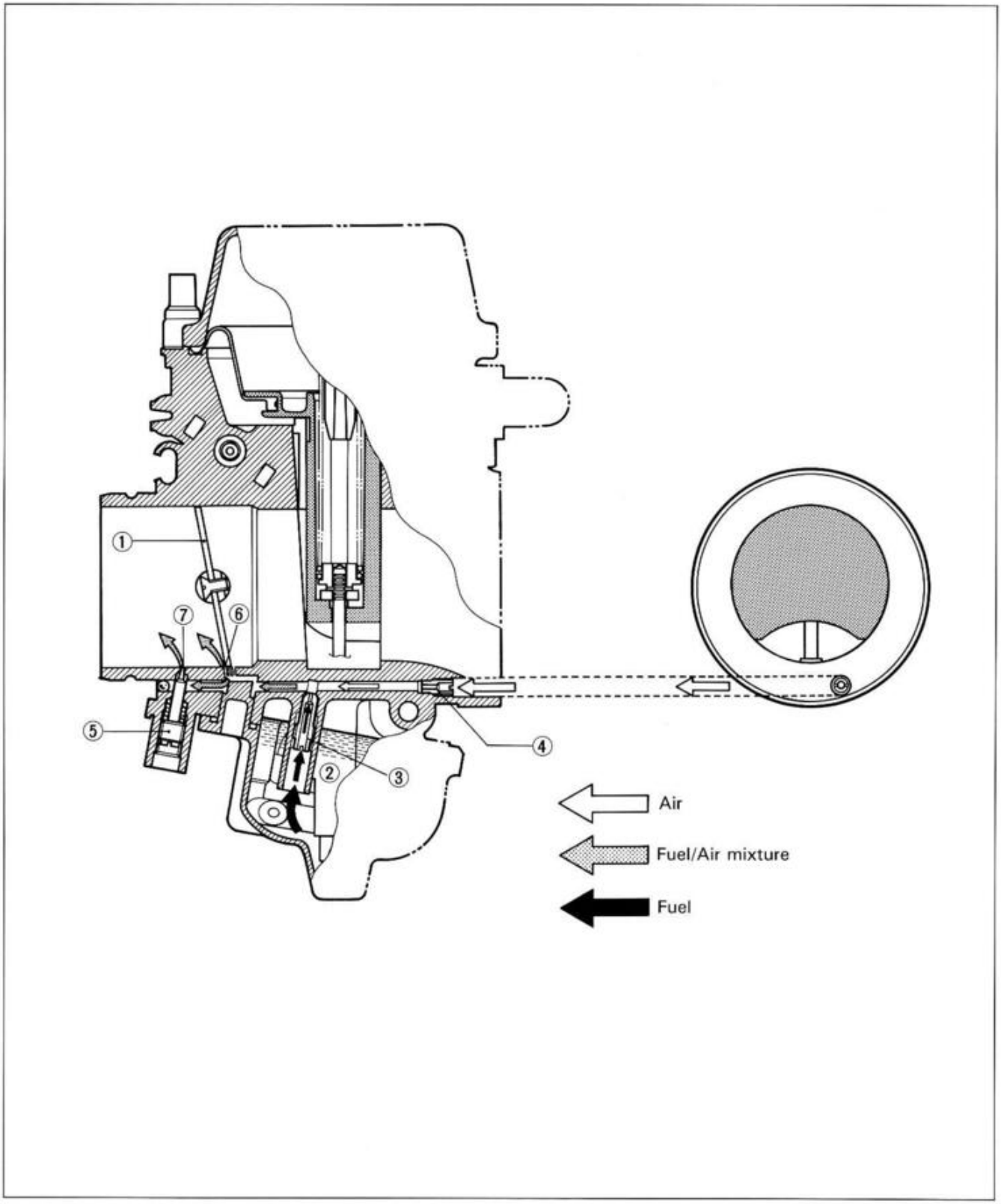

MAIN SYSTEM

As throttle valve ① is opened, engine speed rises, and this increases negative pressure in the venturi Ⓐ. Consequently the piston valve ② moves upward.
Meanwhile, the fuel in float chamber ③ is metered by main jet ④, and the metered fuel enters needle jet ⑤, in which it mixes with the air admitted through main air jet ⑥ to form an emulsion. The emulsified fuel then passes through the clearance between needle jet ⑤ and jet needle ⑦, and is discharged into the venturi Ⓐ, in which it meets main air stream being drawn by the engine. Mixture proportioning is accomplished in needle jet ⑤; the clearance through which the emulsified fuel must flow in large or small, depending ultimately on throttle position.

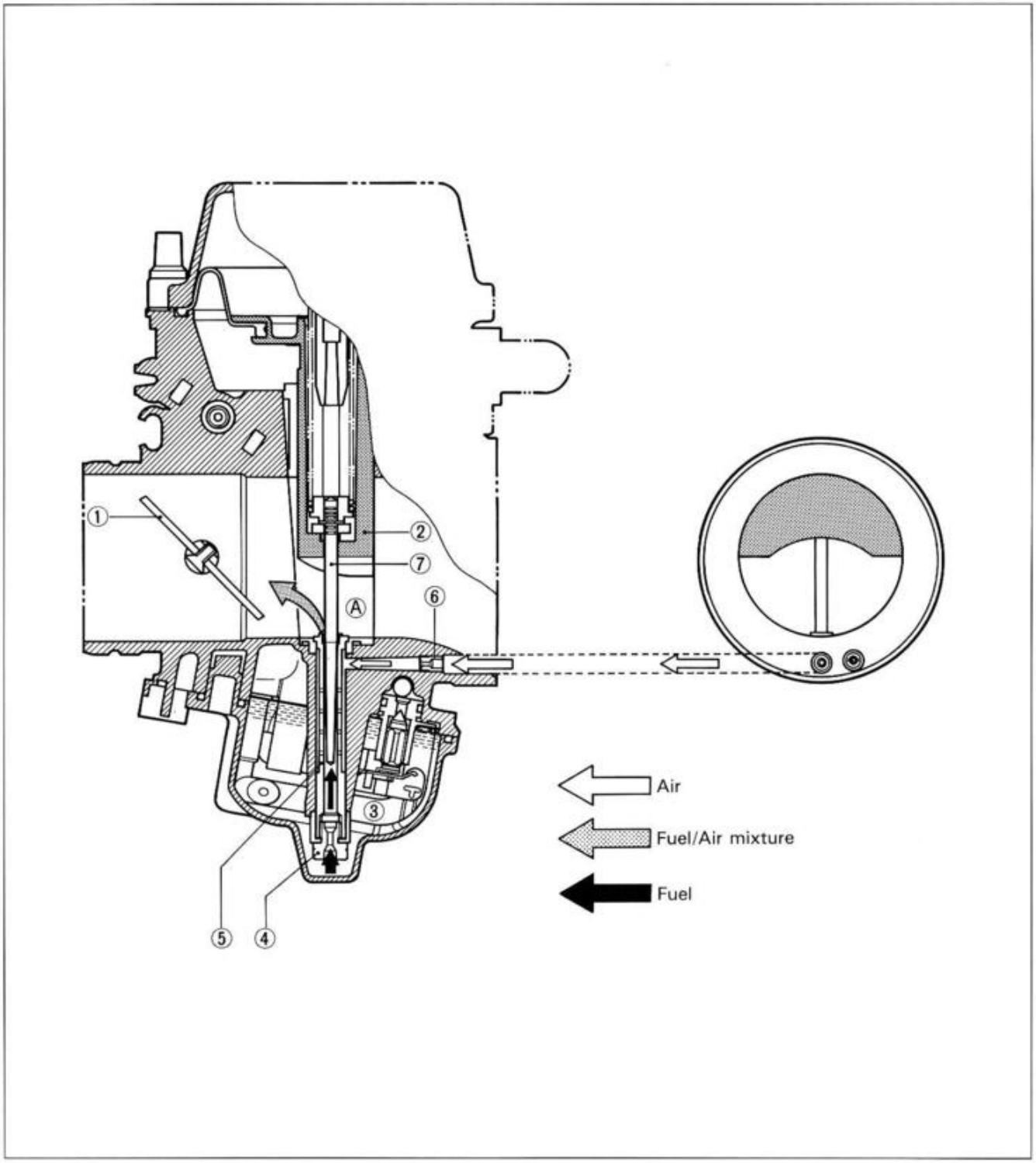

STARTER SYSTEM

Pulling the starter cable ① , fuel is drawn into the starter circuit from the float chamber ② . Starter jets (③, ④) meters this fuel, which then flows into fuel pipe ⑤ and mixes with the air coming from the float chamber. The mixture, rich in fuel content, reaches starter plunger ⑥ and mixes again with the air coming through a passage extending from behind the diaphragm.
The two successive mixings of fuel with air are such that proper fuel/air mixture for starting is produced when the mixture is sprayed out through starter outlet port ⑦ into the main bore.

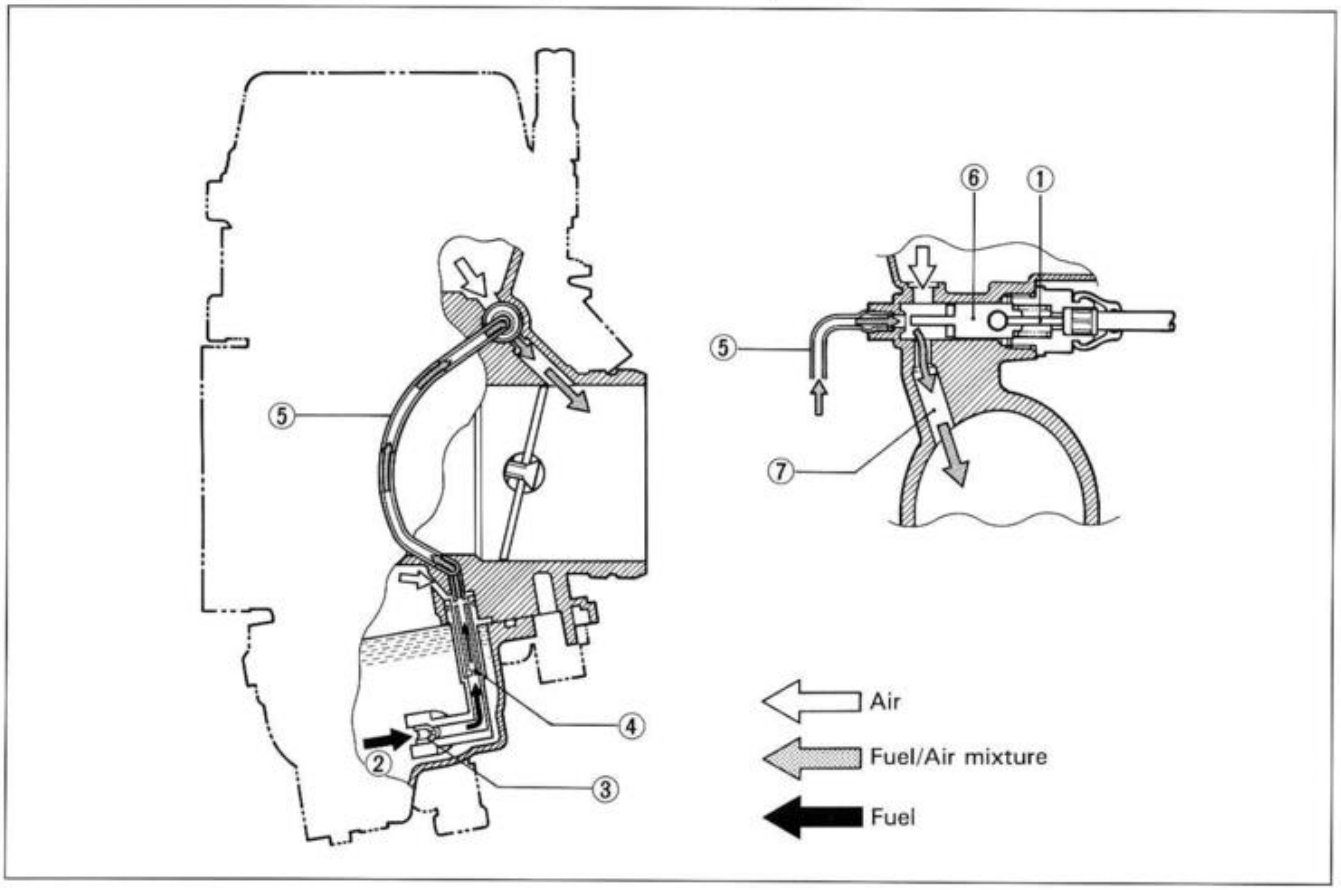

FLOAT SYSTEM

Floats ① and needle valve ② are associated with the same mechanism, so that, as the floats ① move up and down, the needle valve ② too moves likewise.
When fuel level is up in float chamber ③ , floats ① are up and needle valve ② remains pushed up against valve seat. Under this condition, no fuel enters the float chamber ③ .
As the fuel level falls, floats ① go down and needle valve ② unseats itself to admit fuel into the chamber ③ .
In this manner, needle valve ② admits and shuts off fuel alternately to maintain a practically constant fuel level inside the float chamber ③ .

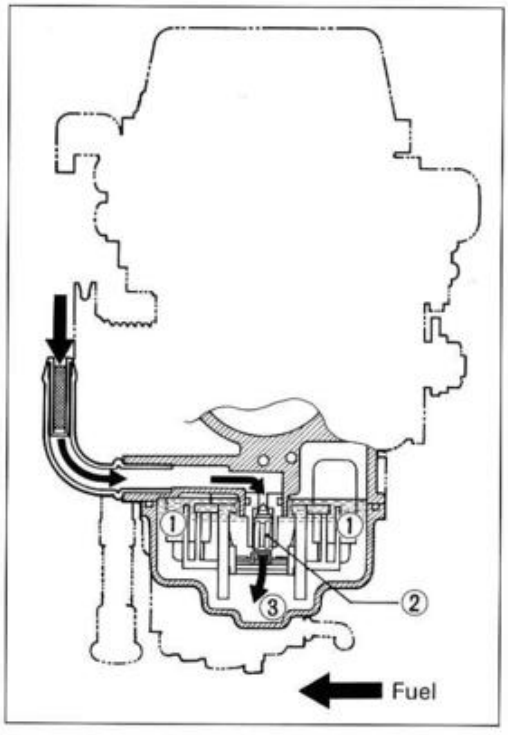

REMOVAL

Refer to page 3-4.

DISASSEMBLY

NOTE:

Before disassembly, prepare a clean and well lit work place where carburetor components can be layed out neatly and won't get lost.

- Remove the carburetor top cap ①.

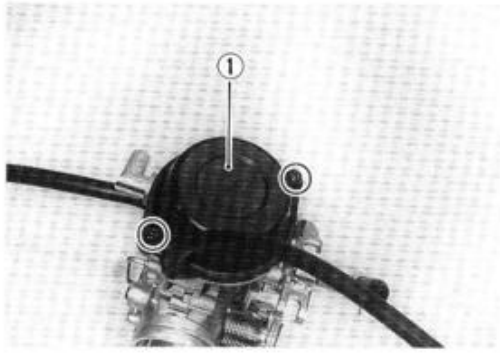

⚠ CAUTION

Do not blow the carburetor body with compressed air, before removing the diaphragm. It may cause a damage to the diaphragm.

- Remove the piston valve return spring ② and piston valve with diaphragm ③.

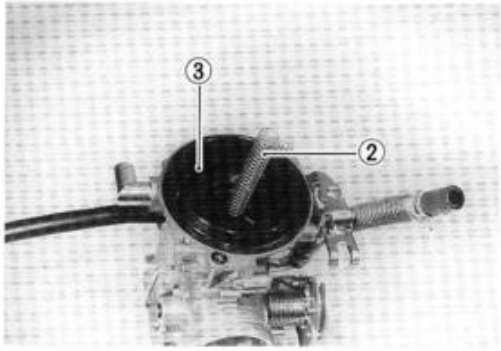

- Remove the jet needle ④ out of the piston valve.

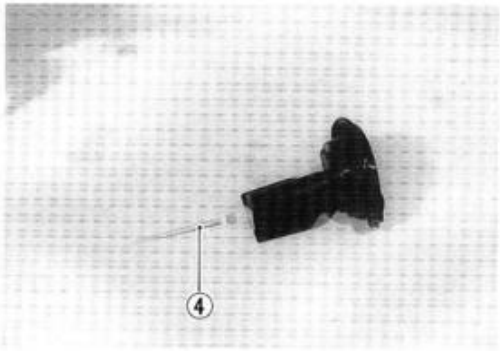

- Remove the float chamber body ⑤.

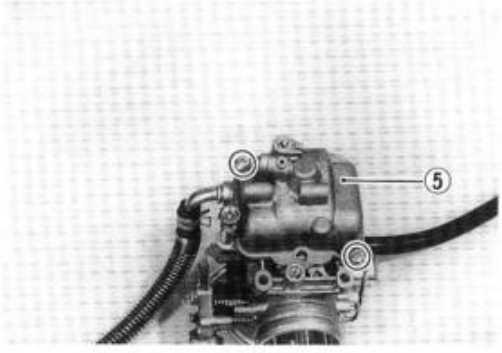

- Remove the float assembly ① and needle valve ②.

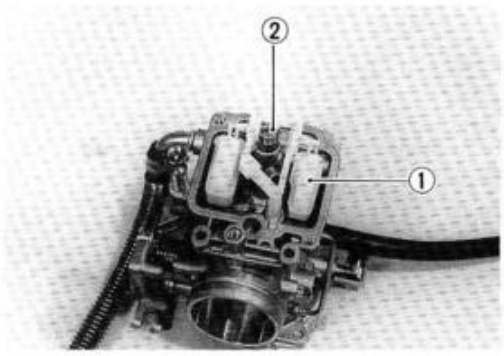

⚠ CAUTION

Do not use a wire for cleaning the valve seat.

- Remove the main jet ③, pilot jet ④ and pilot screw ⑤ (Refer to PILOT SCREW REMOVAL of page 4-12 for E-03, 18 and 33 models).

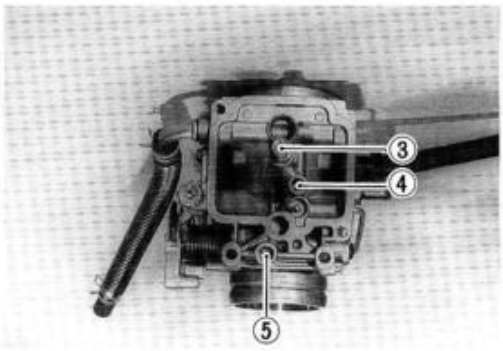

⚠ CAUTION

Do not use a wire for cleaning of passage and jets.

NOTE:
Before removing the pilot screw ⑤, slowly turn the pilot screw in clockwise and count the number of turns until the screw is lightly seated. Make a note of how many turns were made so the screw can be reset correctly after removing.

- Remove the main air jet ⑥.

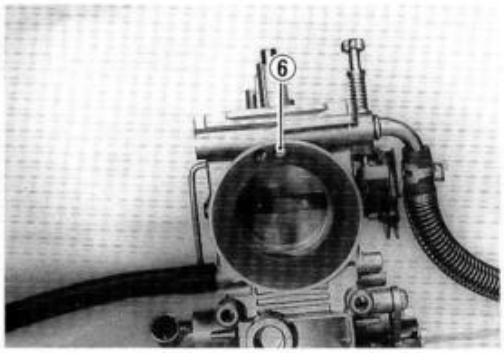

⚠ CAUTION

Do not use a wire for cleaning of jet.

CARBURETOR CLEANING

⚠ WARNING

Some carburetor cleaning chemicals, especially dip-type soaking solutions, are very corrosive and must be handled carefully. Always follow the chemical manufacturer's instructions on proper use, handling and strage.

NOTE:
Remove the pilot screw as described next page before cleaning.

- Clean all jets with a spray-type carburetor cleaner and blow dry with compressed air.
- Clean all circuits of the carburetor thoroughly - not just the perceived problem area. Clean the circuits in the carburetor body with a spray-type cleaner and allow each circuit to soak if necessary to loosen dirt and varnish. Blow the body dry with compressed air.

⚠ CAUTION

Do not use wire to clean jets or passageways. Wire can damage jets and passageways. If the components cannot be cleaned with a spray cleaner it may be necessary to use a dip-type cleaning solution and allow them to soak. Always follow the chemical manufacturer's instructions for proper use and cleaning of the carburetor components.

- After cleaning, reassemble the carburetor with new seals and gaskets. Reinstall the pilot screw to the original factory setting with a new O-ring seal.
- Install a new cap over the pilot screw opening. (for E-03,18,33 models)

PILOT SCREW REMOVAL (FOR E-03,18 AND 33 MODELS)

Because harsh cleaning solvents can damage the O-ring seals in the pilot system, the pilot system components should be removed before cleaning.

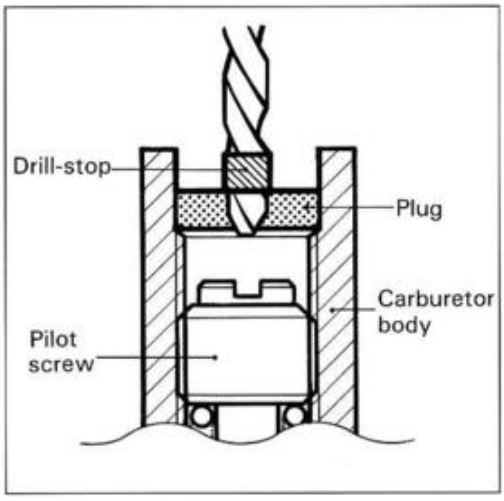

- Use a 1/8'' size drill bit with a drill-stop to remove the pilot screw plug. Set the drill-stop 6 mm from the end of the bit to prevent drilling into the pilot screw. Carefully drill through the plug.
- Thread a self-tapping sheet metal screw into the plug. Pull on the screw head with pliers to remove the plug. Carefully clean any metal shavings from the area.
- Slowly turn the pilot screw in clockwise and count the number of turns until the screw is lightly seated. Make a note of how many turns were made so the screw can be reset correctly after cleaning.
- Remove the pilot screw with the spring, washer, and O-ring.
- After cleaning reinstall the pilot screw to the original setting by turning the screw in until it lightly seats, and then backing it out the same number of turns counted during disassembly.
- Install new plug by tapping it into place with a punch.

INSPECTION

Check the following items for any damage.

* Pilot jet
* Main jet
* Main air jet
* Pilot air jet
* Needle jet air bleeding hole
* Float
* Needle valve
* Starter jet
* Gasket and O-ring
* Throttle shaft oil seal
* Diaphragm
* Pilot outlet and by-pass holes

NEEDLE VALVE INSPECTION

If foreign matter is caught between the valve seat and the needle, the gasoline will continue flowing and cause it to overflow. If the seat and needle are worn beyond the permissible limits, similar trouble will occur. Conversely, if the needle sticks, the gasoline will not flow into the float chamber. Clean the float chamber and float parts with gasoline. If the needle is worn as shown in the illustration, replace it together with a valve seat. Clean the fuel passage of the mixing chamber with compressed air.

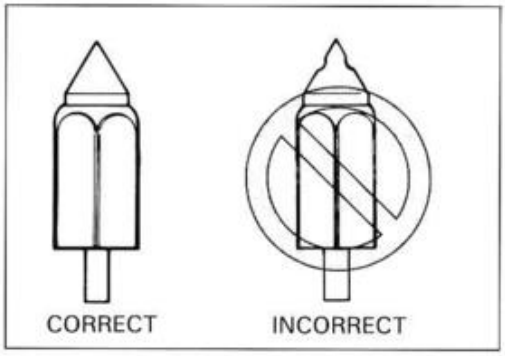

FLOAT HEIGHT ADJUSTMENT

To check the float height, invert the carburetor body, with the float arm kept free, measure the height Ⓐ while float arm is just in contact with needle valve by using calipers. Bend the tongue as necessary to bring the height Ⓐ to this value.

Float height Ⓐ: 14.7 ± 1.0 mm (0.58 ± 0.04 in)

09900-20102: Vernier calipers

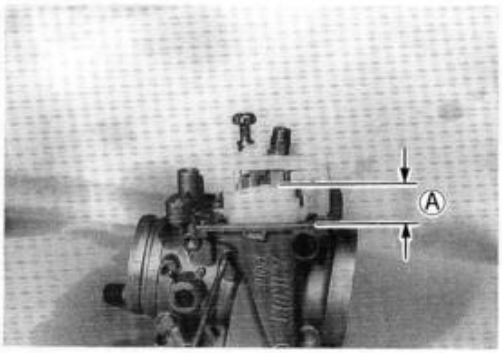

THROTTLE POSITION SWITCH (Except for E-03,18,24,28 and 33 models)

• Remove the fuel tank. (Refer to page 4-3.)

Inspect the throttle position switch for continuity with pocket tester. If any abnormality is found, replace the respective switch assemblies with new ones.

09900-25002: Pocket tester

Tester knob indication: X 1Ω range

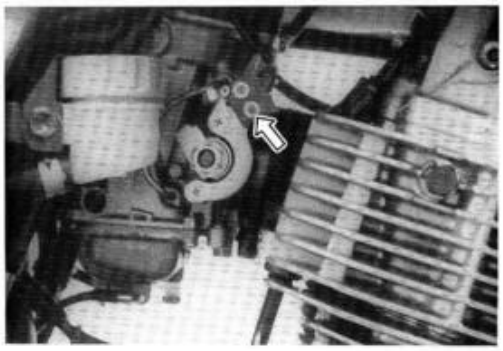

Color / Position	B	B
ON (full-throttle)	○———	———○
OFF		

B: Black

NOTE:
When making above test, it is not necessary to start the engine.

REASSEMBLY AND REMOUNTING

Reassemble and remount the carburetor assembly in the reverse order of removal and disassembly.

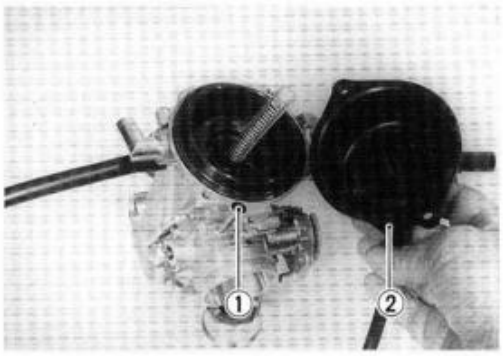

- When installing the carburetor top cap, align the vacuum ports (①, ②).

- After remounting the carburetor, the following adjustments are necessary.
  * Engine idle r/min ..... Page 2-6
  * Throttle cable play ..... Page 2-6

LUBRICATION SYSTEM AND COOLING SYSTEM

OIL PRESSURE

Refer to page 2-18.

OIL FILTER

Refer to page 2-8.

OIL SUMP FILTER

Refer to page 3-16.

NOTE:
When separating the crankcase, wash the oil sump filter with cleaning solvent, and then blow compressed air through it to dry off solvent.

ENGINE LUBRICATION/CYLINDER HEAD COOLING SYSTEM CHART

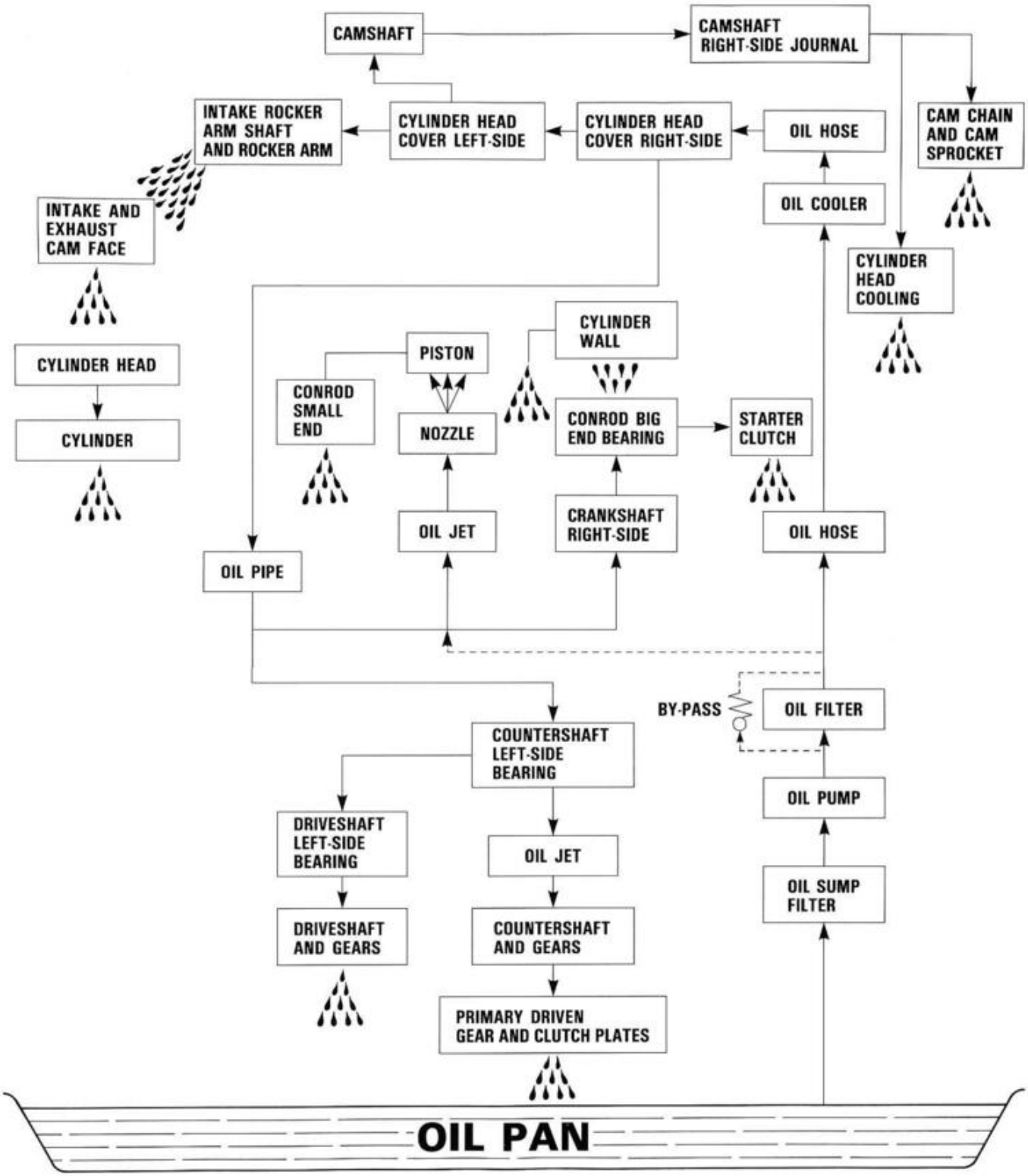

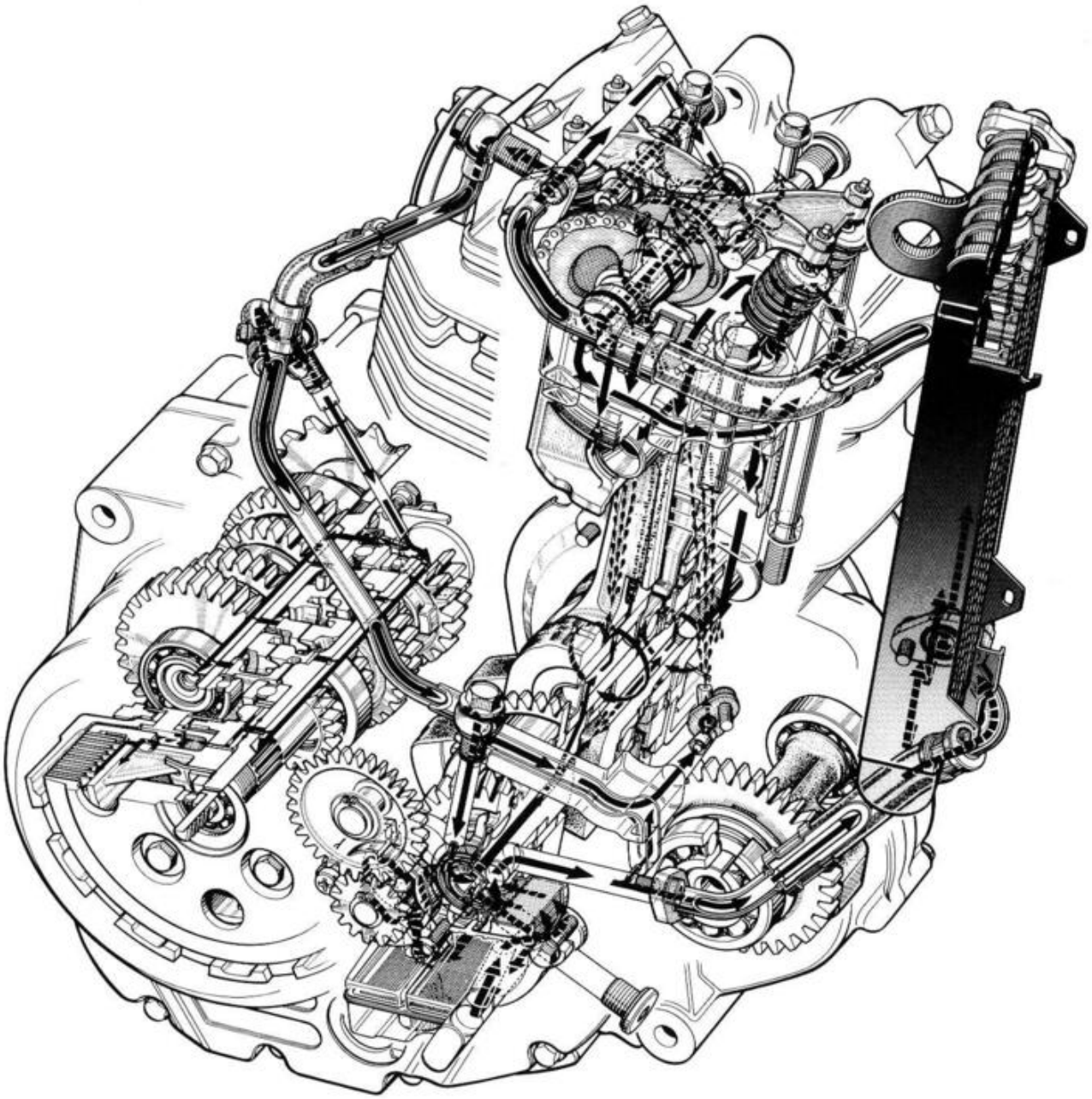

OIL COOLER

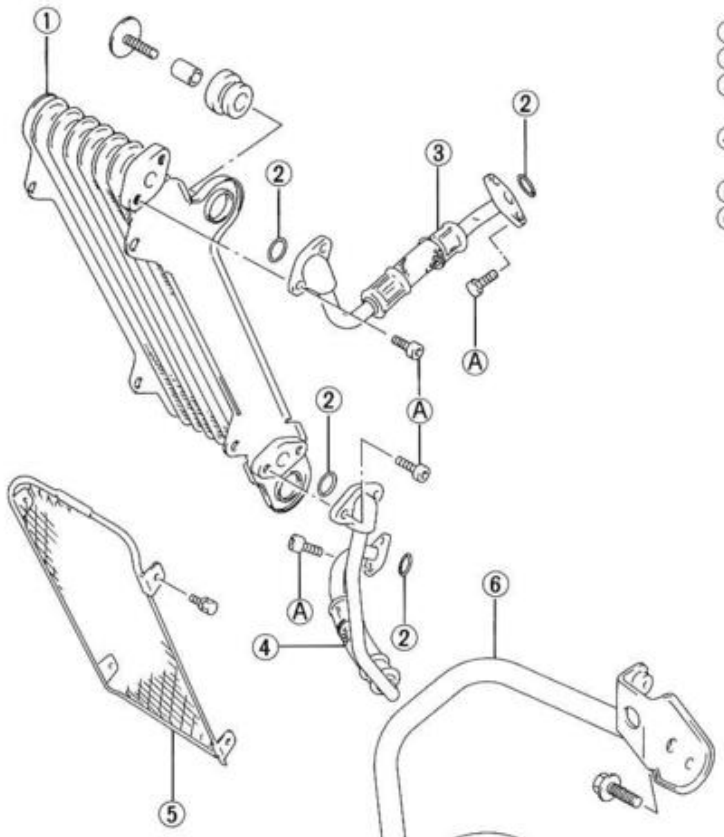
① Oil cooler
② O-ring
③ Oil cooler hose (To cylinder head)
④ Oil cooler hose (From clutch cover)
⑤ Oil cooler cover
⑥ Oil cooler guard

ITEM	N·m	kg-m	lb-ft
Ⓐ	10	1.0	7.0

REMOVAL

- Drain engine oil. (Refer to page 3-1.)
- Remove the oil cooler hose mounting bolts.

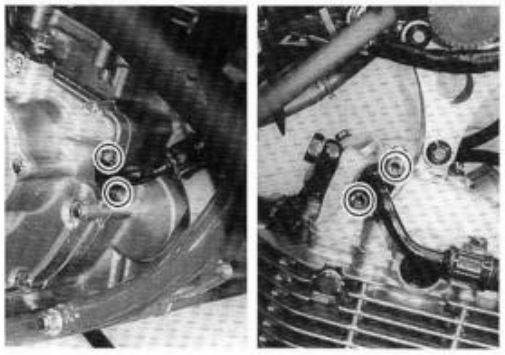

- Remove the oil cooler holder with cooler by removing its mounting bolts.

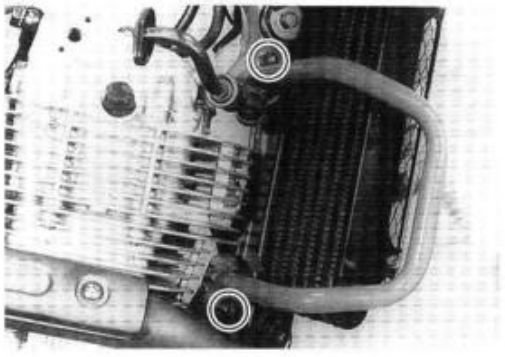

CHASSIS

CONTENTS

FRAME COVER AND SEAT 5- 1
FRONT WHEEL 5- 2
REMOVAL 5- 2
INSPECTION AND DISASSEMBLY 5- 3
REASSEMBLY AND REMOUNTING 5- 4
FRONT BRAKE 5- 6
BRAKE PAD REPLACEMENT 5- 7
BRAKE FLUID REPLACEMENT 5- 7
CALIPER REMOVAL AND DISASSEMBLY 5- 8
CALIPER INSPECTION 5- 9
CALIPER REASSEMBLY AND REMOUNTING 5- 9
BRAKE DISC INSPECTION 5-10
MASTER CYLINDER REMOVAL AND DISASSEMBLY 5-11
MASTER CYLINDER INSPECTION 5-12
MASTER CYLINDER REASSEMBLY AND REMOUNTING 5-13
FRONT FORK 5-14
REMOVAL AND DISASSEMBLY 5-14
INSPECTION 5-16
REASSEMBLY AND REMOUNTING 5-17
STEERING 5-20
REMOVAL AND DISASSEMBLY 5-20
INSPECTION 5-25
REASSEMBLY AND REMOUNTING 5-25
REAR WHEEL 5-27
REMOVAL 5-27
INSPECTION AND DISASSEMBLY 5-29
REASSEMBLY AND REMOUNTING 5-31
REAR BRAKE 5-33
BRAKE PAD REPLACEMENT 5-34
BRAKE FLUID REPLACEMENT 5-34
CALIPER REMOVAL AND DISASSEMBLY 5-35
CALIPER AND DISC INSPECTION 5-36
CALIPER REASSEMBLY AND REMOUNTING 5-36
MASTER CYLINDER REMOVAL AND DISASSEMBLY 5-37
MASTER CYLINDER INSPECTION 5-38
MASTER CYLINDER REASSEMBLY AND REMOUNTING 5-38
REAR SWINGARM AND SUSPENSION 5-39
REMOVAL 5-40
INSPECTION AND DISASSEMBLY 5-42
REASSEMBLY AND REMOUNTING 5-44
REASSEMBLING INFORMATION 5-45
FINAL INSPECTION AND ADJUSTMENT 5-46
LOWERING THE SEAT HEIGHT 5-47
OPTIONAL PARTS SUPPLY 5-47
SPECIAL TOOLS 5-47
FRONT FORK 5-48
REAR SHOCK ABSORBER 5-53
SIDE STAND 5-56
WARNING LABEL 5-57

FRAME COVER AND SEAT

REMOVAL AND REMOUNTING

- Remove the right and left frame covers by removing the mounting screws.

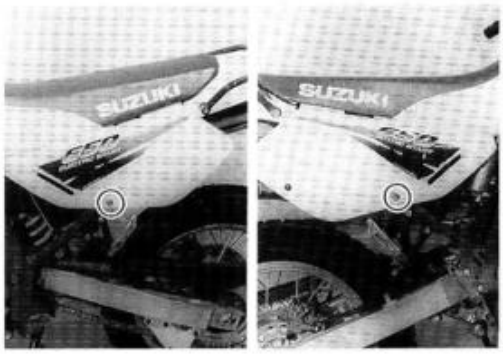

- Remove the seat by removing the mounting bolts.

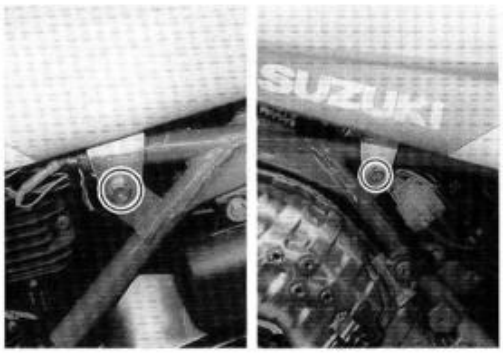

- Remount the seat and frame covers.

FRONT WHEEL

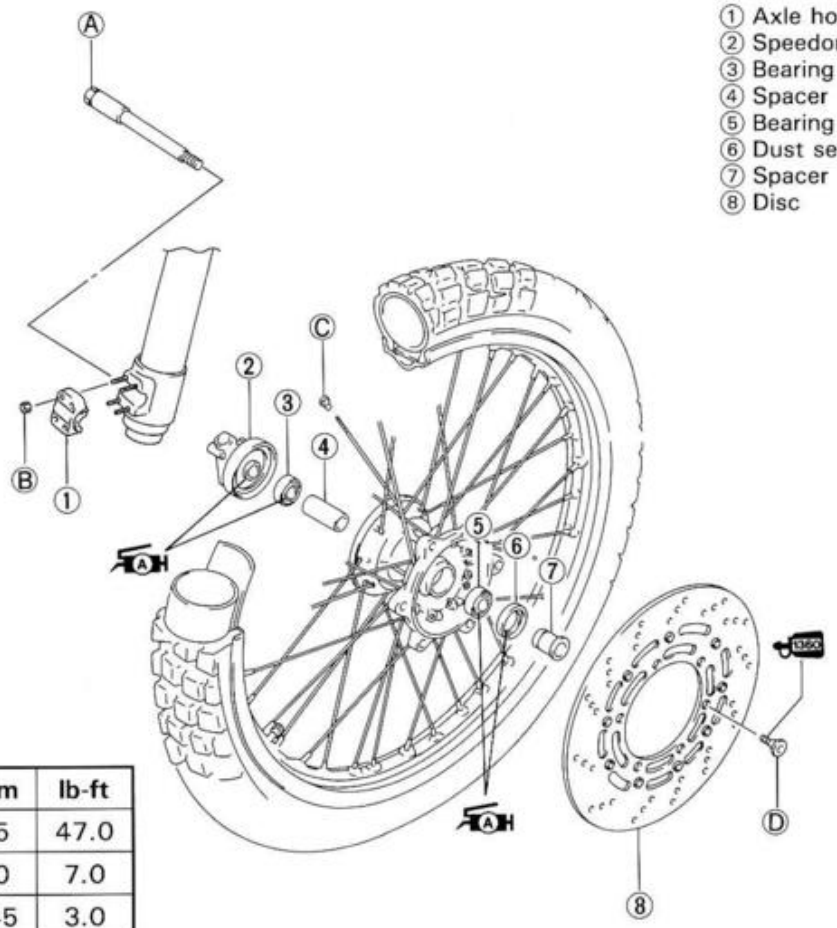

① Axle holder
② Speedometer gearbox
③ Bearing (R)
④ Spacer
⑤ Bearing (L)
⑥ Dust seal
⑦ Spacer
⑧ Disc

ITEM	N·m	kg-m	lb-ft
Ⓐ	65	6.5	47.0
Ⓑ	10	1.0	7.0
Ⓒ	4.5	0.45	3.0
Ⓓ	23	2.3	16.5

REMOVAL

- Loosen the front axle holder nuts ① and axle shaft ②.
- Carefully position a jack under the chassis tubes and raise until the front wheel is slightly off the ground.
- Remove the front wheel by removing the front axle.

NOTE:
Do not operate the brake lever while dismounting the front wheel.

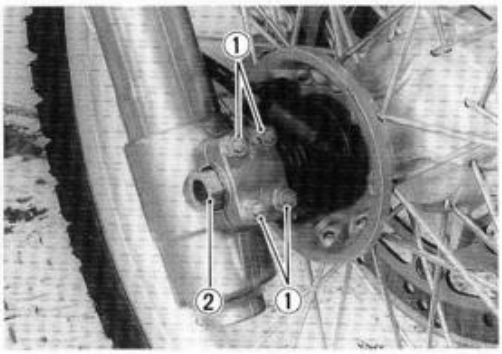

- Remove the disc by removing the mounting bolts.

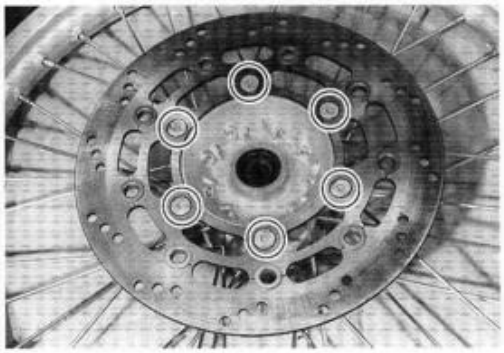

INSPECTION AND DISASSEMBLY

WHEEL BEARING

Inspect the play of bearing inner ring by hand while mounted in the wheel.
Rotate the inner ring by hand to inspect if any abnormal noise occurs or rotating smoothly.
Replace the bearing if there is anything unusual.

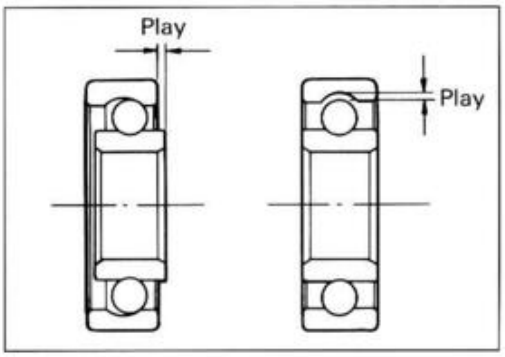

- Remove the dust seal.
- Drive out the both bearing with the special tool in the following procedures.

TOOL 09941-50111: Bearing remover

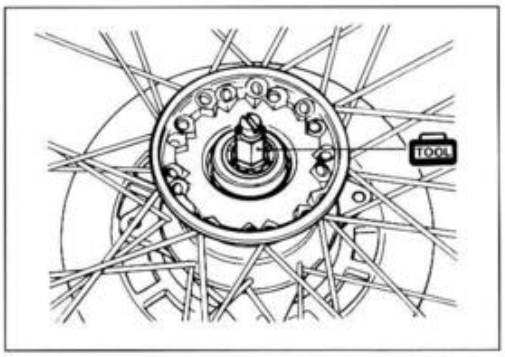

- Insert the adapter into the bearing.
- After inserting the wedge bar from the opposite side, lock the wedge bar in the slit of the adapter.
- Drive out the bearing by knocking the wedge bar.

⚠ CAUTION

The removed bearing should be replaced with new ones.

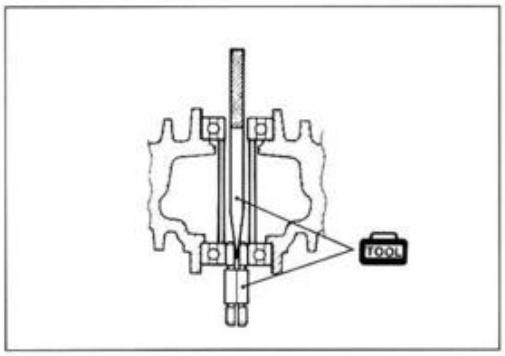

FRONT AXLE

Check the front axle runout with a dial gauge and replace it if the runout exceeds the limit.

TOOL 09900-20606: Dial gauge (1/100 mm)
09900-20701: Magnetic stand
09900-21304: "V" block set

Service Limit: 0.25 mm (0.010 in)

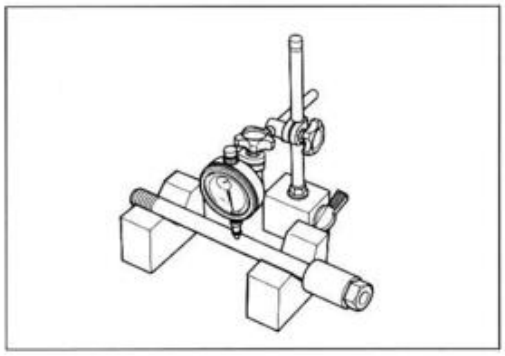

WHEEL RIM

Make sure that the wheel rim runout does not exceed the service limit when checked as shown.
An excessive runout is usually due to worn or loose wheel bearings and can be reduced by replacing the bearings. If bearing replacement fails to reduce the runout, replace the wheel.

Service Limit : 2.0 mm (0.08 in)
(Axial and Radial)

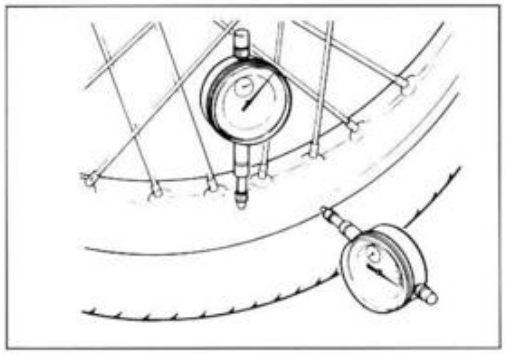

SPOKE NIPPLE

Check to be sure that all nipples are tight, and retighten them as necessary.

Spoke nipple: 4.5 N·m (0.45 kg-m, 3.0 lb-ft)

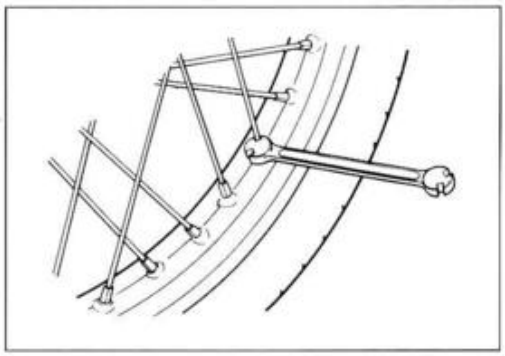

TIRE (Refer to page 2-12.)

REASSEMBLY AND REMOUNTING

Reassemble and remount the front wheel in the reverse order of removal and disassembly, and also carry out the following steps:

WHEEL BEARING

- Apply grease to the bearings.

99000-25030: SUZUKI SUPER GREASE "A"

- Install the wheel bearings with the special tools.

09924-84510: Bearing installer
09924-84521: Bearing installer

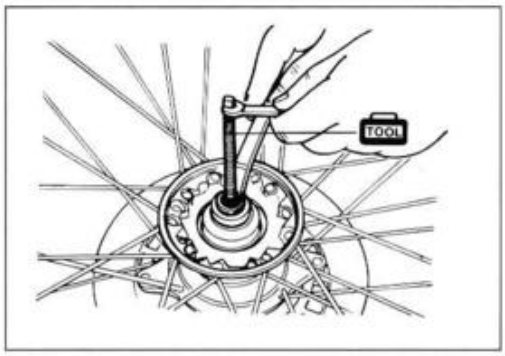

NOTE:
First install the wheel bearing for left side.

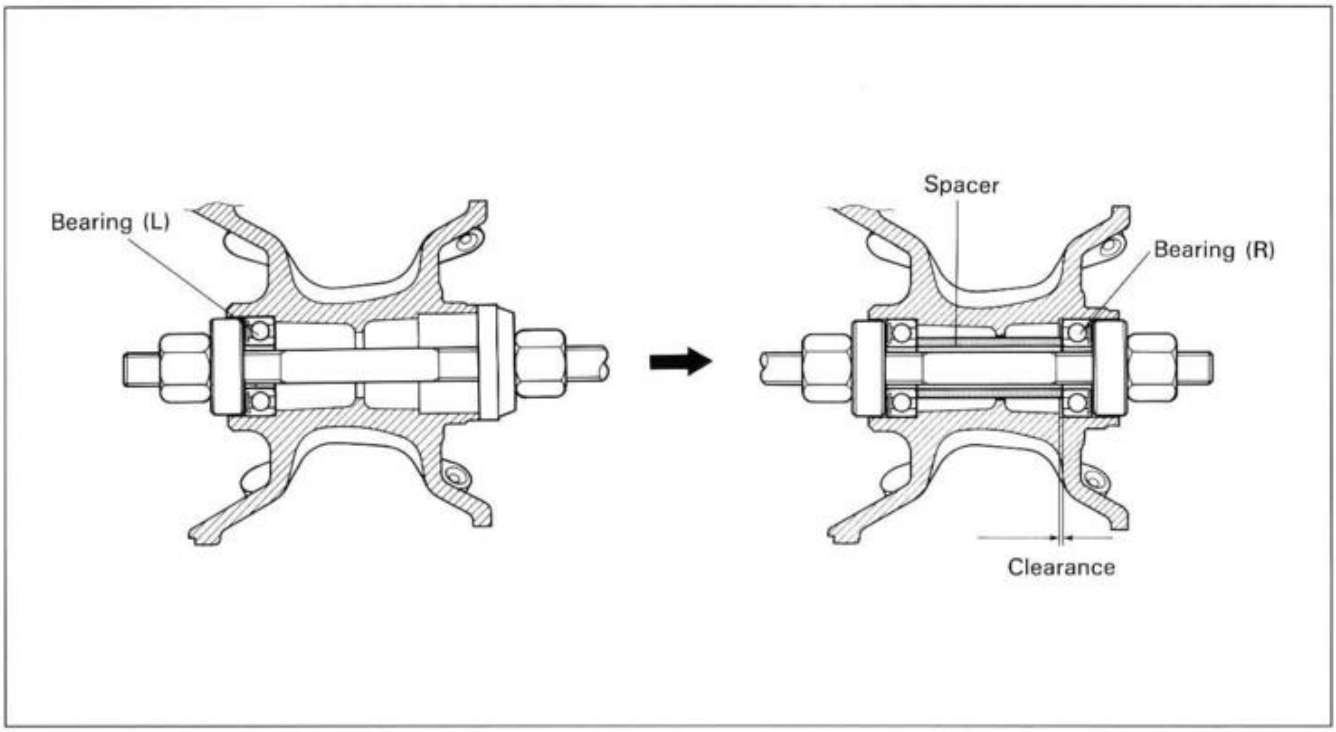

BRAKE DISC

- Make sure that the brake disc is clean and free of any greasy matter. Apply THREAD LOCK SUPER "1360" to the disc mounting bolts and tighten them to the specified torque.

99000-32130: THREAD LOCK SUPER "1360"

Disc bolt: 23 N·m (2.3 kg-m, 16.5 lb-ft)

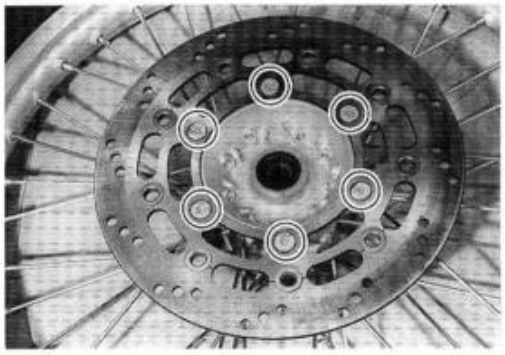

- Align the drive lugs ① to the recesses ② of the wheel hub.

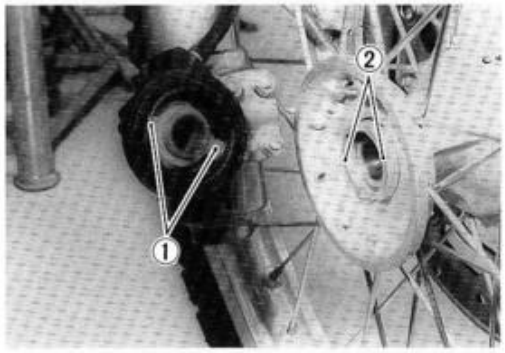

- Before tightening the front axle, position the stopper ③ of speedometer gearbox against stopper ④.

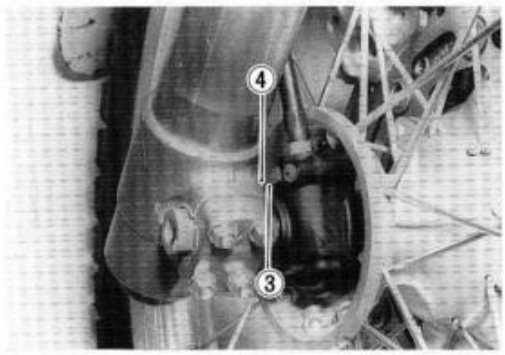

- Tighten the front axle to the specified torque and then move the front fork up and down.
- Tighten the axle holder nuts to the specified torque.

NOTE:
When tightening the axle holder nuts, first tighten the upper nuts.

Front axle: 65 N·m (6.5 kg-m, 47.0 lb-ft)
Axle holder nut: 10 N·m (1.0 kg-m, 7.0 lb-ft)

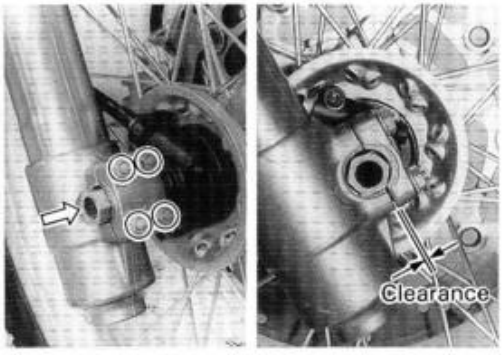

FRONT BRAKE

① Piston/cup set
② Brake hose
③ Pad
④ Piston set

ITEM	N·m	kg-m	lb-ft
Ⓐ	10	1.0	7.0
Ⓑ	23	2.3	16.5
Ⓒ	18	1.8	13.0
Ⓓ	2.5	0.25	1.8
Ⓔ	8	0.8	6.0
Ⓕ	23	2.3	16.5
Ⓖ	13	1.3	9.5
Ⓗ	26	2.6	19.0

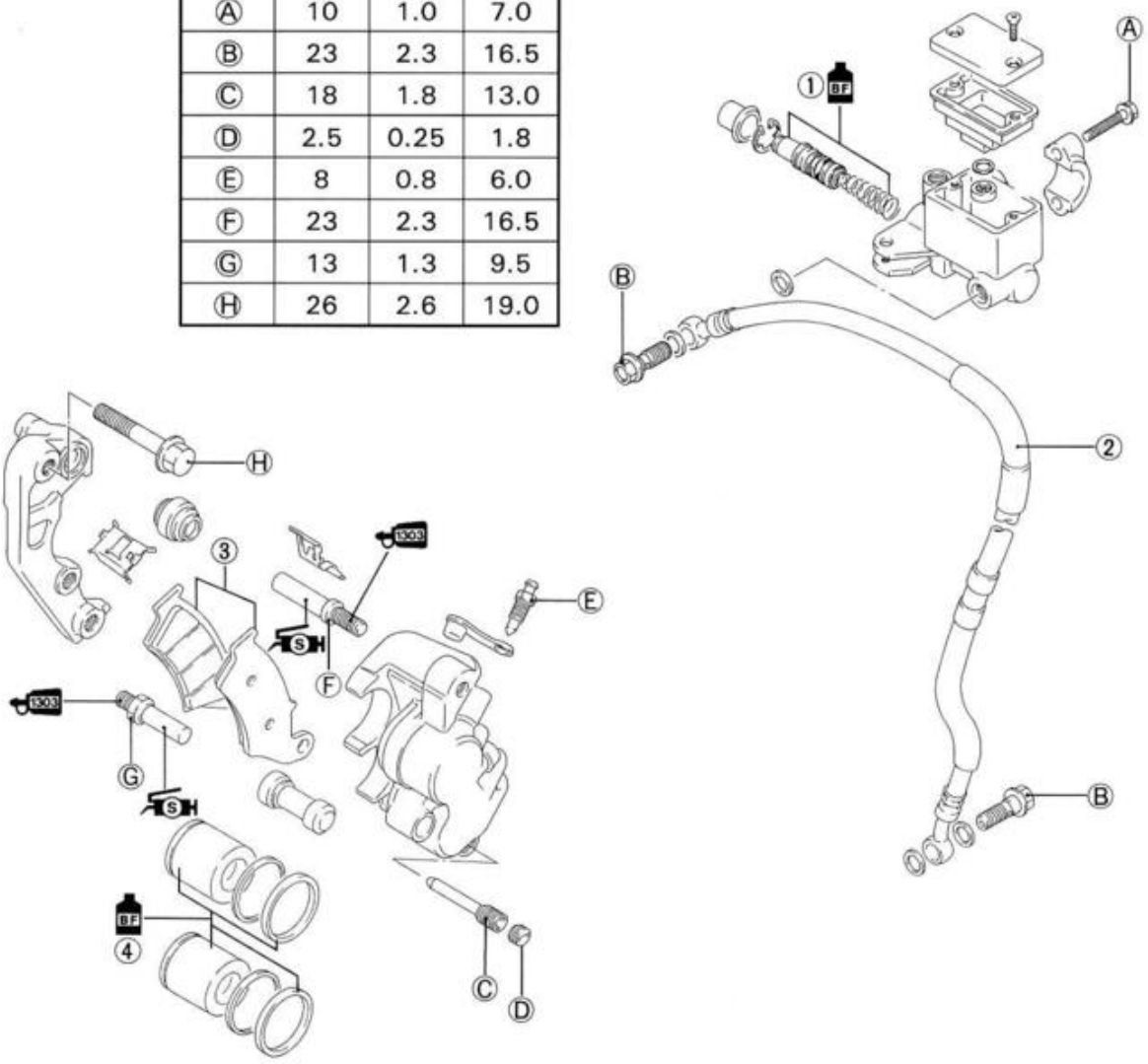

⚠ WARNING

* This brake system is filled with a ethylene glycol-based DOT 4 brake fluid. Do not use or mix different types of fluid such as silicone-based or petroleum-based.
* Do not use any brake fluid taken from old, used or unsealed containers. Never reuse brake fluid left over from the last servicing or stored for long periods.
* When storing the brake fluid, seal the container completely and keep away from children.
* When replenishing brake fluid, take care not to get dust into fluid.
* When washing brake components, use fresh brake fluid. Never use cleaning solvent.
* A contaminated brake disc or brake pad reduces braking performance. Discard contaminated pads and clean the disc with high quality brake cleaner or neutral detergent.

⚠ CAUTION

Handle brake fluid with care: the fluid reacts chemically with paint, plastics rubber materials etc.

BRAKE PAD REPLACEMENT

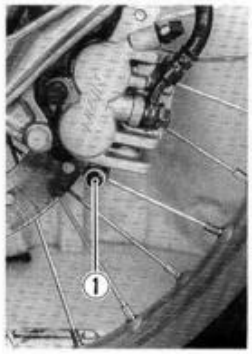

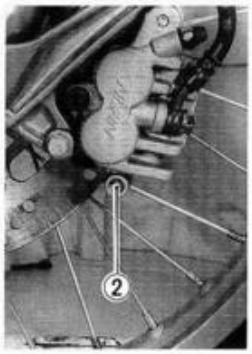

- Remove the plug ①.
- Remove the brake pads by removing the mounting pin ②.

⚠ CAUTION

*** Do not operate the brake lever while dismounting the pads.**
*** Replace the brake pad as a set, otherwise braking performance will be adversely affected.**

- Install the new pads.

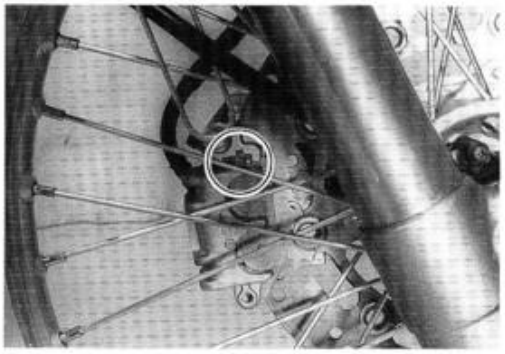

⚠ WARNING

Make sure that the pads are properly engaged with the guide plates as shown in photo.

- Tighten the pad mounting pin ② and plug ① to the specified torque.

Pad mounting pin: 18 N·m (1.8 kg-m, 13.0 lb-ft)
Plug: 2.5 N·m (0.25 kg-m, 1.8 lb-ft)

NOTE:
After replacing the brake pads, pump with the brake lever few times to operate the brake correctly and then check the brake fluid level.

BRAKE FLUID REPLACEMENT

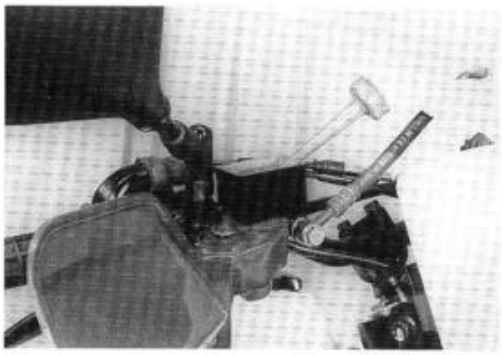

- Place the motorcycle on a level surface and keep the handlebars straight.
- Remove the master cylinder reservoir cap and diaphragm.
- Suck up the old brake fluid as much as possible.
- Fill the reservoir with fresh brake fluid.

Specification and classification: DOT 4

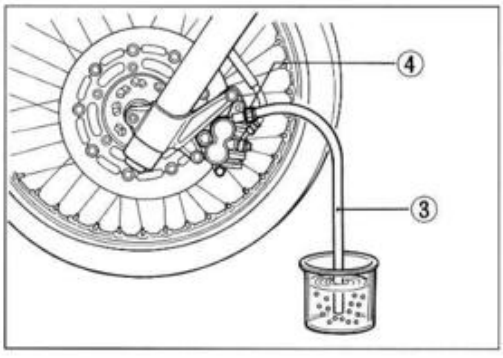

- Connect a clear hose ③ to the air bleeder valve ④, and insert the free end of hose into a receptacle.
- Loosen the bleeder valve and pump the brake lever until no more old brake fluid flows out of the bleeder valve.
- Close the air bleeder valve, and disconnect a clear hose. Fill the reservoir with fresh brake fluid to the upper end of the inspection window.

⚠ CAUTION

Bleed air in the brake fluid circuit. (Refer to page 2-11.)

CALIPER REMOVAL AND DISASSEMBLY

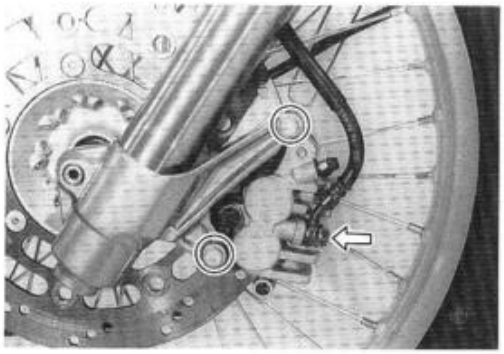

- Disconnect the brake hose by removing the union bolt and catch the brake fluid in a suitable receptacle.
- Remove the caliper by removing the mounting bolts.

⚠ CAUTION

Never reuse the brake fluid left over from previous servicing and stored for long periods.

⚠ WARNING

Brake fluid, if it leaks, will interfere with safe running and descolor painted surfaces.
Check the brake hose and hose joints for cracks and oil leakage.

- Remove the brake pad. (Refer to page 5-7.)

- Remove the caliper holder ① and spring ②.

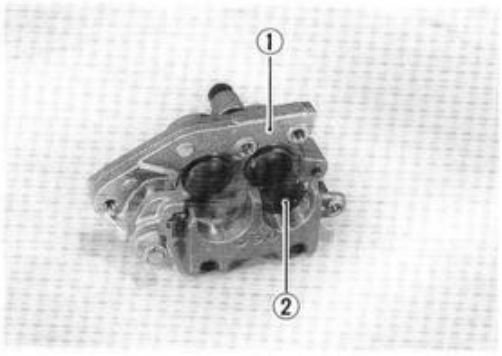

- Place a rag over the piston to prevent its popping out and push out the pistons with an air gun.

⚠ CAUTION

Do not use high pressure air to prevent piston damage.

- Remove the dust seals and piston seals.

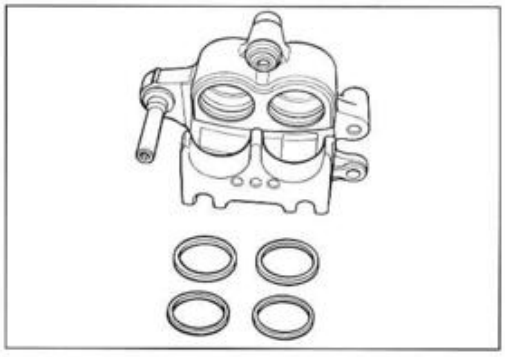

⚠ CAUTION

Do not reuse the remored seals to prevent fluid leakage.

CALIPER INSPECTION

Inspect the caliper cylinder wall for nicks, scratches or other damage.

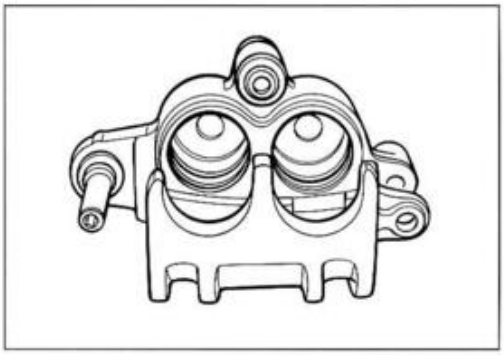

Inspect the piston surface for any scratches or other damage.

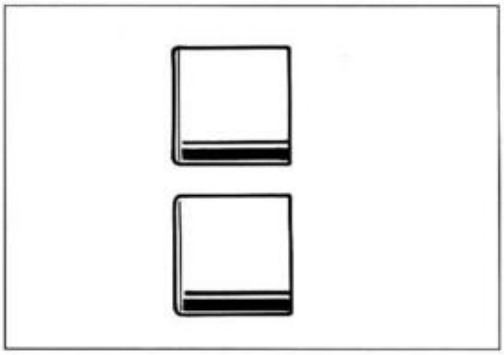

CALIPER REASSEMBLY AND REMOUNTING

Reassemble and remount the caliper in the reverse order of removal and disassembly. Pay attention to the following points:

- Wash the caliper bores and pistons with specified brake fluid. Particularly wash the dust seal grooves and piston seal grooves.

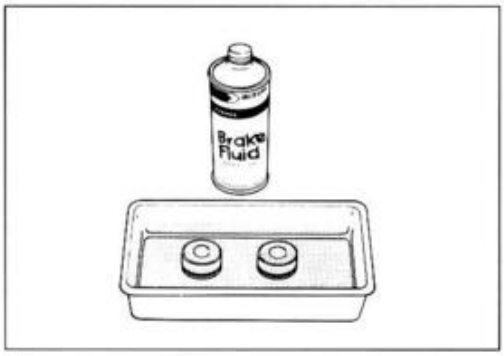

BF Specification and classification: DOT 4

⚠ CAUTION

*** Wash the caliper components with fresh brake fluid before reassembly.**
*** Do not wipe the brake fluid off after washing the components.**
*** When washing the components, use the specified brake fluid. Never use different types of fluid or cleaning solvent such as gasoline, kerosine or the others.**
*** Replace the piston seals and dust seals with new ones when reassembly. Apply the brake fluid to both seals when installing them.**

- Apply SUZUKI SILICONE GREASE to the caliper axles.

SH 99000-25100: SUZUKI SILICONE GREASE

- Tighten each bolt to the specified torque.

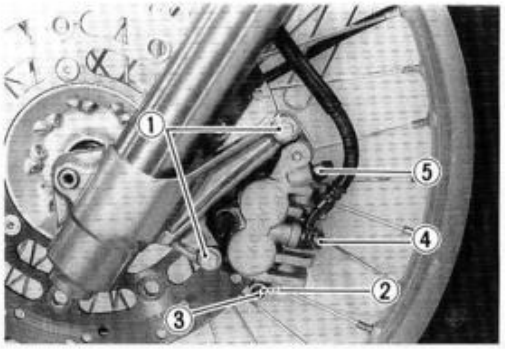

Caliper mounting bolt ①: 26 N·m (2.6 kg-m, 19.0 lb-ft)
Pad mounting pin ②: 18 N·m (1.8 kg-m, 13.0 lb-ft)
Plug ③: 2.5 N·m (0.25 kg-m, 1.8 lb-ft)
Brake hose union bolt ④: 23 N·m (2.3 kg-m, 16.5 lb-ft)
Air bleeder valve ⑤: 8 N·m (0.8 kg-m, 6.0 lb-ft)

NOTE:
Before remounting the caliper, push the piston all the way into the caliper.

⚠ CAUTION

Bleed air from the system after reassembling the caliper. (Refer to page 2-11.)

BRAKE DISC INSPECTION

- Remove the front and rear wheels. (Refer to pages 5-2 and 5-27.)

Visually check the brake disc for damage or cracks.
Measure the thickness with a micrometer.
Replace the disc if the thickness is less than the service limit or if damage is found.

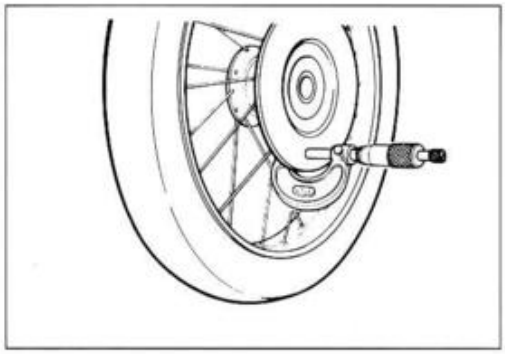

TOOL 09900-20205: Micrometer (0—25 mm)

Service Limit
Front disc: 3.5 mm (0.14 in)
Rear disc : 4.0 mm (0.16 in)

Measure the runout with a dial gauge.
Replace the disc if the runout exceeds the service limit.

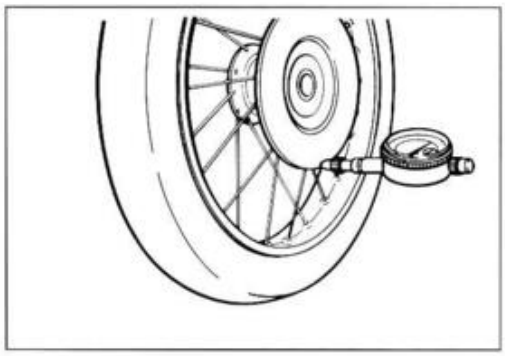

TOOL 09900-20606: Dial gauge (1/100 mm)
09900-20701: Magnetic stand

Service Limit
Front and Rear disc: 0.3 mm (0.012 in)

- Remove the disc. (Refer to pages 5-3 and 5-29.)
- Install the disc. (Refer to pages 5-5 and 5-32.)

MASTER CYLINDER REMOVAL AND DISASSEMBLY

- Remove the brake lever cover and rear view mirror.

- Remove the brake lever.
- Disconnect the front brake switch lead wires.

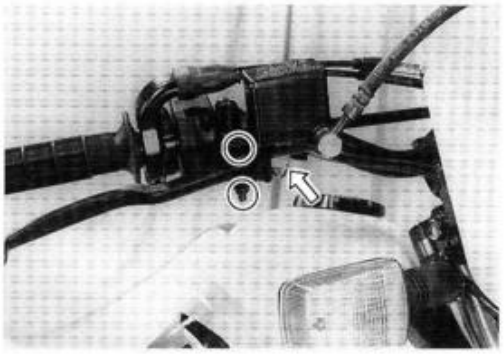

- Place a rag underneath the union bolt on the master cylinder to catch any spilled drops of brake fluid. Remove the union bolt and disconnect the brake hose/master cylinder joint.

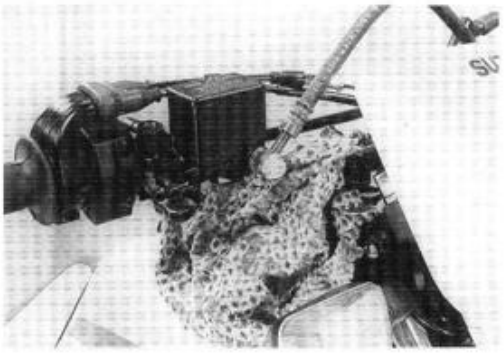

⚠ CAUTION

Immediately and completely wipe off any brake fluid contacting any part of the motorcycle. The fluid reacts chemically with paint, plastics and rubber materials, etc. and will damage them severely.

- Remove the master cylinder assembly.

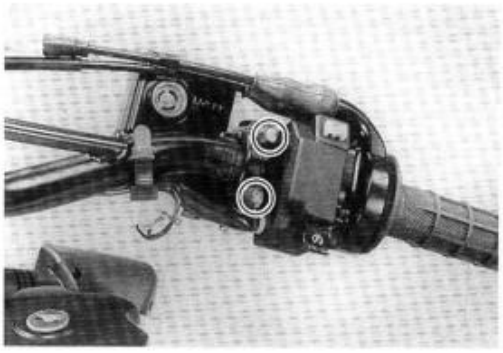

- Remove the front brake switch.

- Remove the reservoir cap and diaphragm.
- Drain brake fluid.

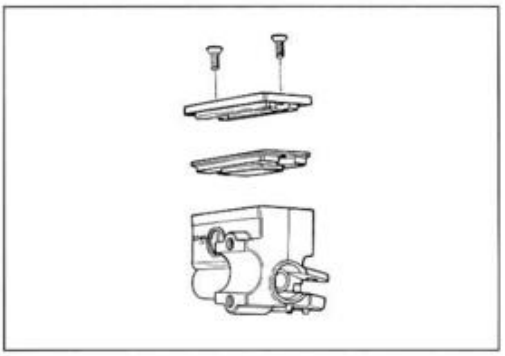

- Remove the dust boot.
- Remove the circlip with the special tool.

TOOL 09900-06108: Snap ring pliers

- Remove the piston/secondary cup, primary cup and spring.

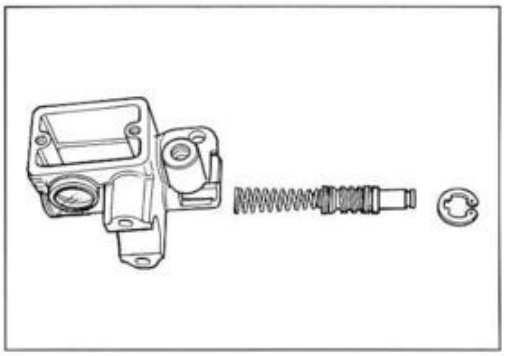

MASTER CYLINDER INSPECTION

Inspect the master cylinder bore for any scratches or other damage.

Inspect the piston surface for any scratches or other damage.

Inspect the primary cup, secondary cup and dust seal for wear or damage.

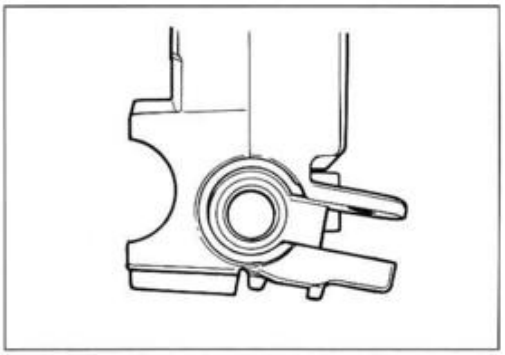

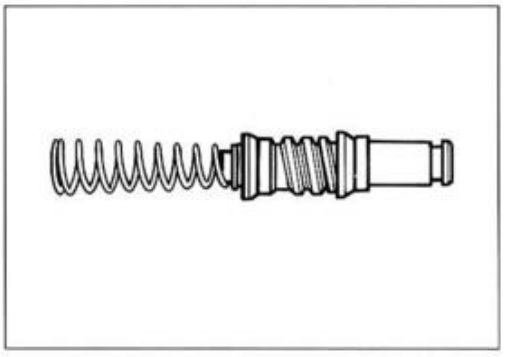

MASTER CYLINDER REASSEMBLY AND REMOUNTING

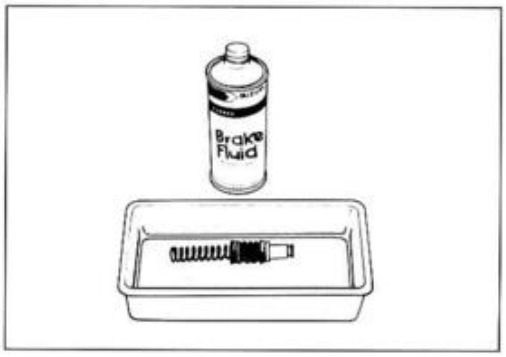

Reassemble the master cylinder in the reverse order of removal and disassembly. Pay attention to the following points:

⚠ CAUTION

*** Wash the master cylinder components with fresh brake fluid before reassembly. Never use cleaning solvent or gasoline to wash them.**
*** Do not wipe the components with a rag.**
*** Apply brake fluid to the cylinder bore and all the component to be inserted into the bore.**

Specification and classification: DOT 4

- When remounting the master cylinder on the handlebars, align the master cylinder holder's lower mating surface ① with punched mark ② on the handlebars and tighten the upper clamp bolt first as shown.

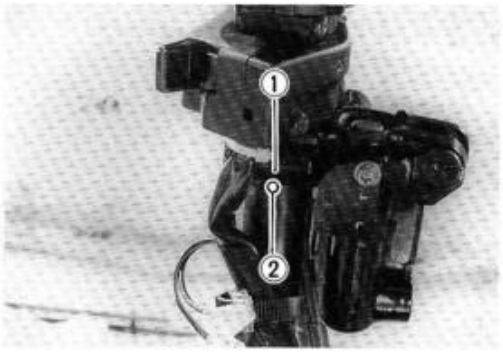

Master cylinder mounting bolt:
10 N·m (1.0 kg-m, 7.0 lb-ft)

⚠ CAUTION

Bleed air from the system after reassembling master cylinder. (Refer to page 2-11.)

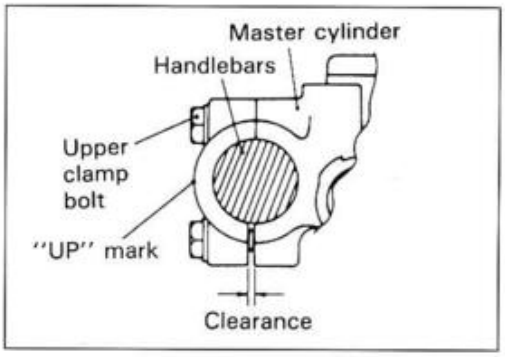

FRONT FORK

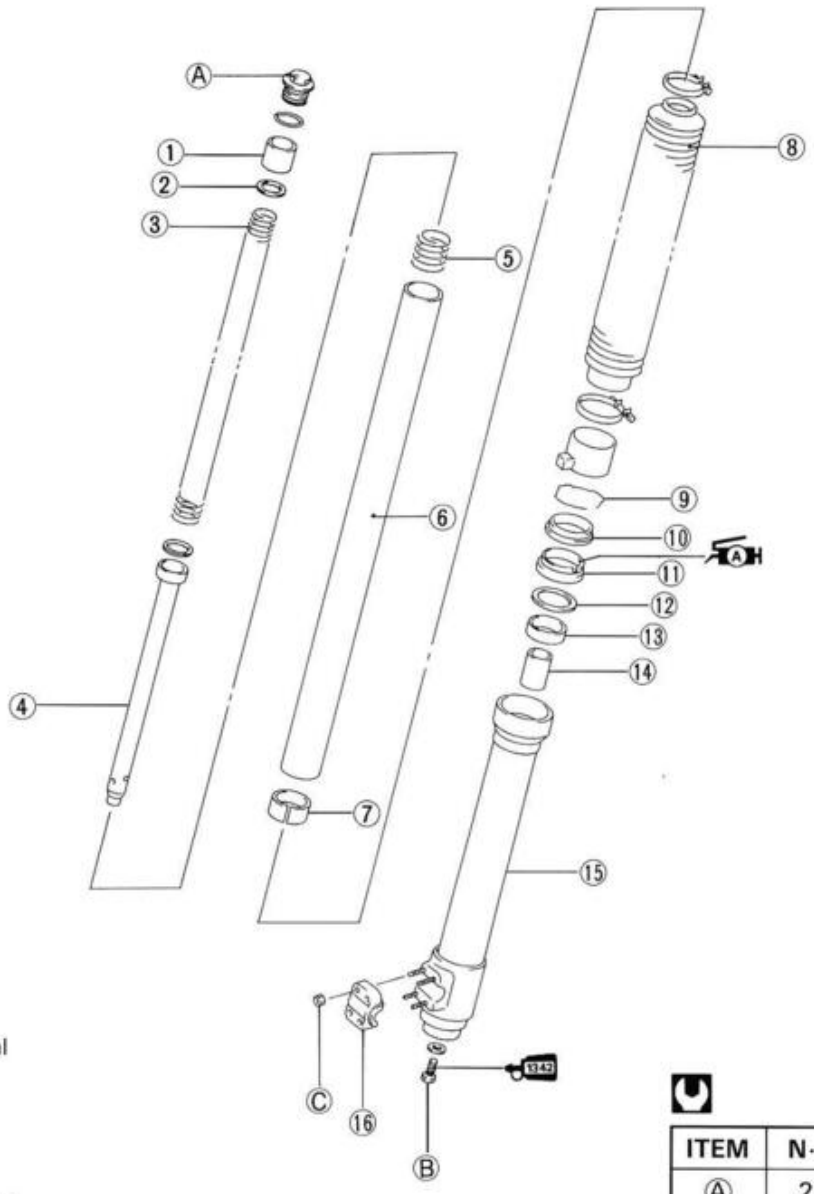

① Spacer
② Washer
③ Spring
④ Damper rod
⑤ Spring
⑥ Inner tube
⑦ Inner tube metal
⑧ Boot
⑨ Stopper ring
⑩ Dust seal
⑪ Oil seal
⑫ Retainer
⑬ Outer tube metal
⑭ Oil lock piece
⑮ Outer tube
⑯ Front axle holder

ITEM	N·m	kg-m	lb-ft
Ⓐ	23	2.3	16.5
Ⓑ	30	3.0	21.5
Ⓒ	10	1.0	7.0

REMOVAL AND DISASSEMBLY

- Remove the front wheel. (Refer to page 5-2.)
- Remove the front brake caliper. (Refer to page 5-8.)
- Remove the front brake hose clamp bolt ①.
- Remove the speedometer cable guide bolt ②.

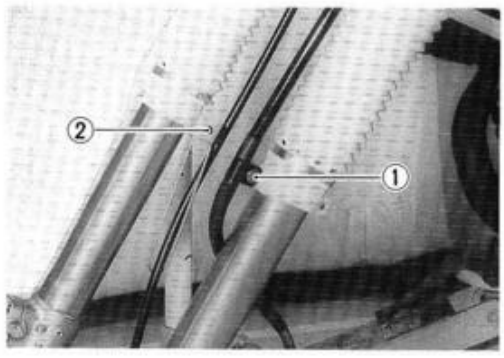

- Slightly loosen the front fork cap bolt ① after loosening the front fork upper clamp bolt ② to facilitate later disassembly.
- Remove the front fork by loosening the lower clamp bolts ③.

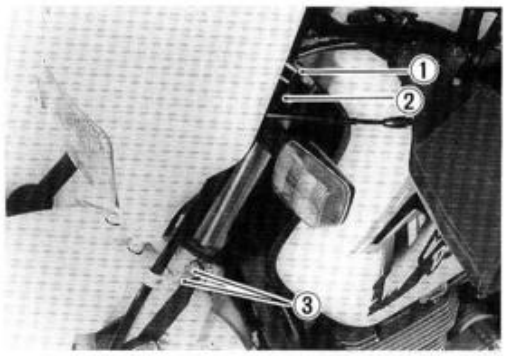

- Remove the front fork cap bolt ①, spacer ④, washer ⑤ and spring ⑥.

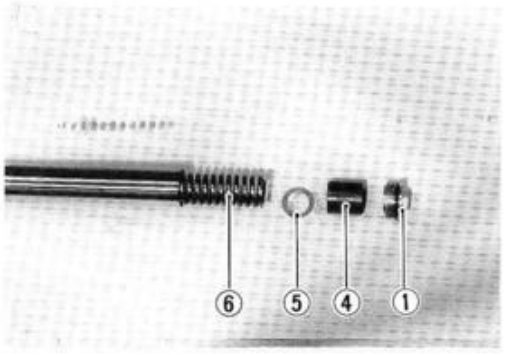

- Invert the fork and stroke it several times to drain fork oil.
- Hold the fork inverted for a few minutes to drain fork oil.

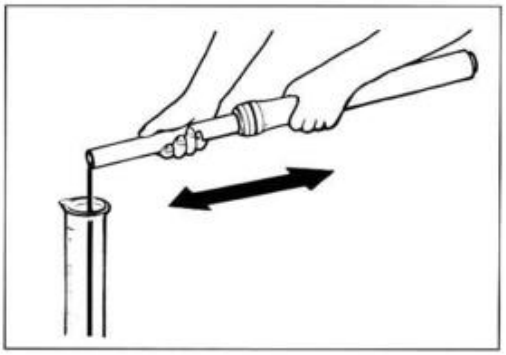

- Remove the damper rod bolt with a 8 mm hexagon wrench and special tools.

TOOL **09940-34520: "T" handle**
09940-34592: Attachment "G"

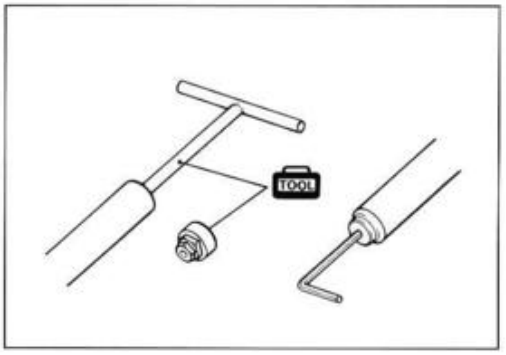

- Remove the damper rod with spring.

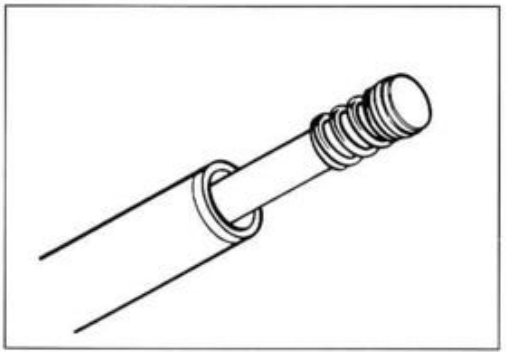

- Remove the boot by loosening the clamp screws.

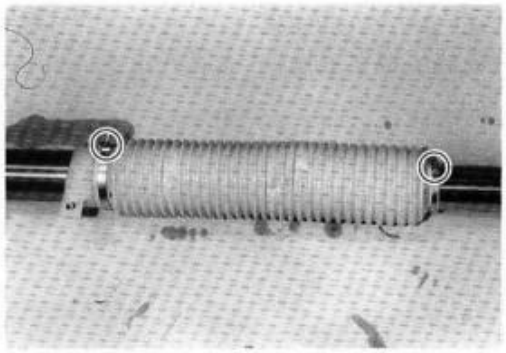

- Remove the dust seal stopper ring.

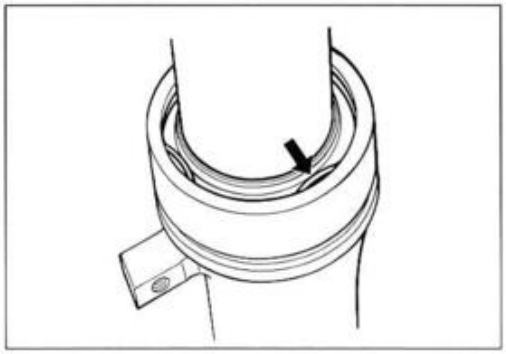

- Separate the inner tube from the outer tube.

⚠ CAUTION

*** The removed dust seal and oil seal should be replaced.**
*** When separating the inner tube from the outer tube, both anti-friction metals may be damaged and must be replaced with new ones.**

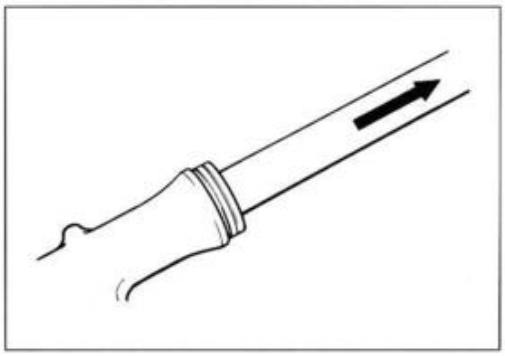

INSPECTION

FORK SPRING

Measure the fork spring free length. If it is shorter than service limit, replace it.

Service Limit: 548 mm (21.6 in)

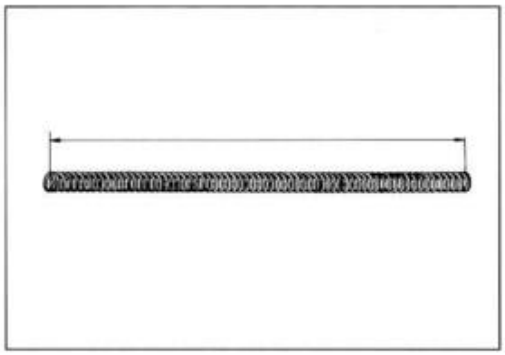

INNER TUBE AND OUTER TUBE

Inspect the inner tube sliding surface for any scuffing and check for bend. Inspect the outer tube sliding surface for any scuffing.

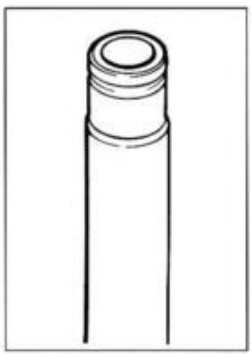

DAMPER ROD RING

Inspect the damper rod ring for wear or damage.

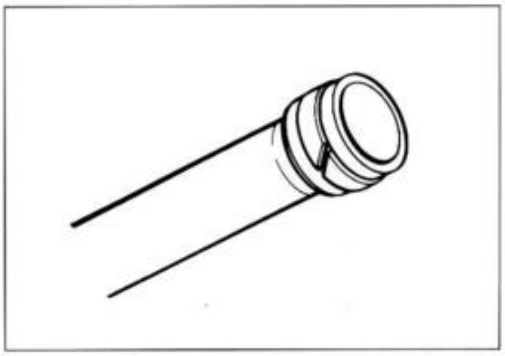

REASSEMBLY AND REMOUNTING

Reassemble and remount the front fork in the reverse order of removal and disassembly, and also carry out the following steps:

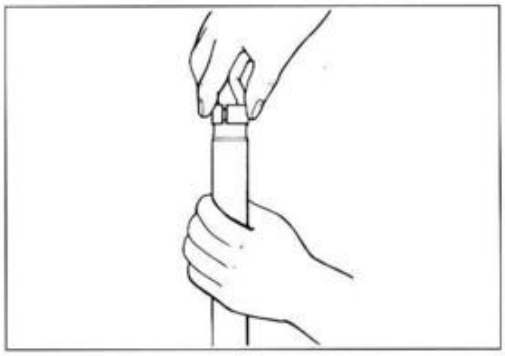

INNER TUBE METAL

- Install the metal by hand as shown in the illustration.

⚠ CAUTION

Use special care to prevent damage to the "Teflon" coated surface of the Anti-friction metal when mounting it.

OUTER TUBE METAL, OIL SEAL AND DUST SEAL

- Clean the metal groove of outer tube and metal outer surface.
- Apply grease to the lip of new oil seal ③.

99000-25030: SUZUKI SUPER GREASE "A"

- Install the outer tube metal ①, oil seal retainer ②, oil seal ③ and dust seal ④.

09940-52860: Front fork oil seal installer

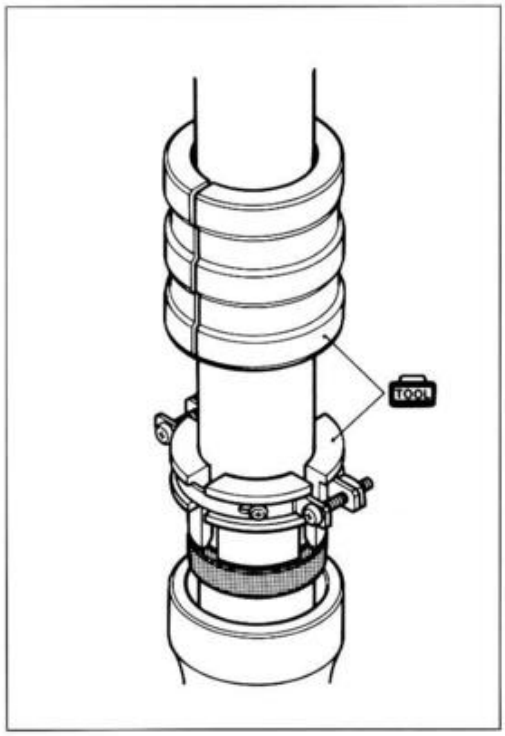

⚠ CAUTION

Use special care to prevent damage to the "Teflon" coated surface of the Anti-friction metal when mounting it.

- Install the dust seal stopper ring ⑤.

⚠ CAUTION

Make sure that the oil seal stopper ring fitted securely.

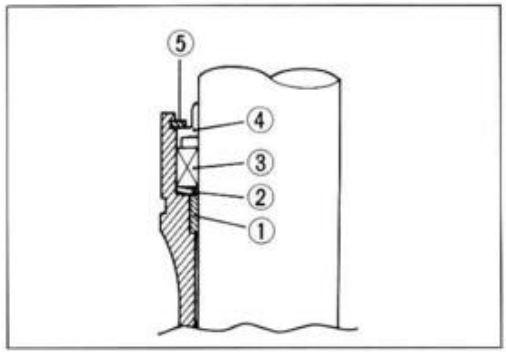

DAMPER ROD BOLT

Apply THREAD LOCK "1342" to the damper rod bolt and tighten it to the specified torque with the special tools and 8-mm hexagon wrench.

99000-32050: THREAD LOCK "1342"

09940-34520: "T" handle
09940-34592: Attachment "G"

Damper rod bolt: 30 N·m (3.0 kg-m, 21.5 lb-ft)

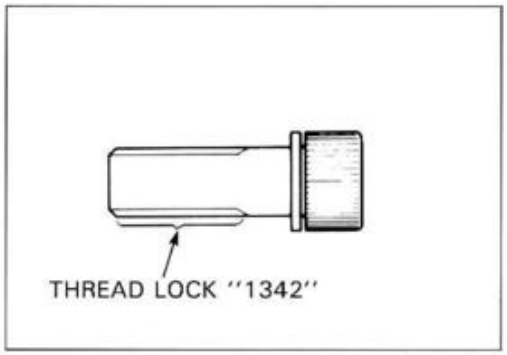

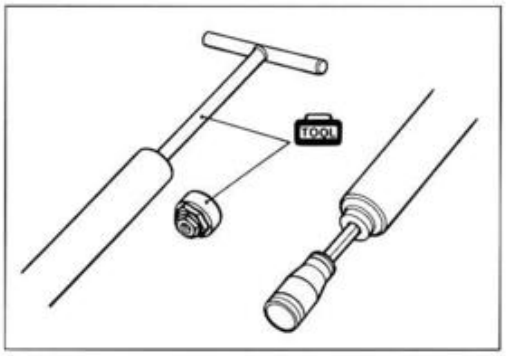

FORK OIL

- For the fork oil, be sure to use a front fork oil whose viscosity rating meets specifications below.

Fork oil type: Fork oil #10

Fork oil capacity: 565 ml (19.1/19.9 US/Imp oz)

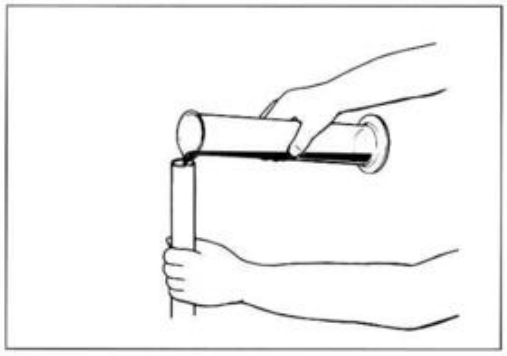

- Hold the front fork vertical and adjust the fork oil level with the special tool.

NOTE:
When adjusting oil level, remove the fork spring and compress the inner tube fully.

09943-74111: Fork oil level gauge

Oil level: 164 mm (6.5 in)

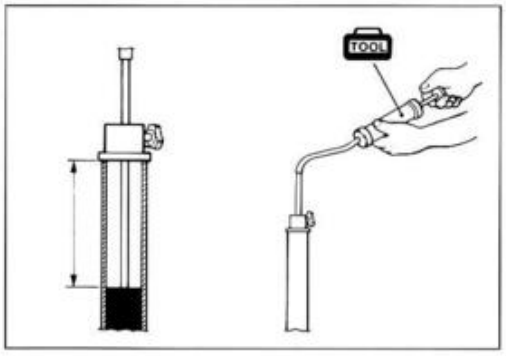

FORK SPRING

- Install the fork spring close pitch side up.

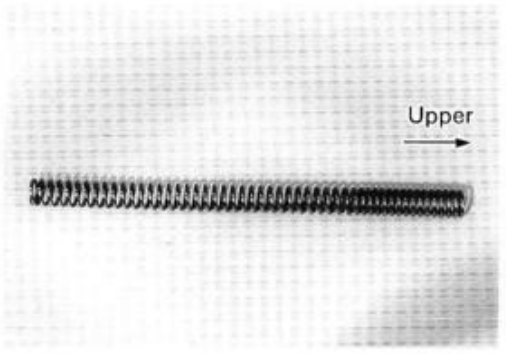

FRONT FORK REMOUNTING

- Align the top surface ① of the inner tube to the top surface ② of the steering stem upper bracket.

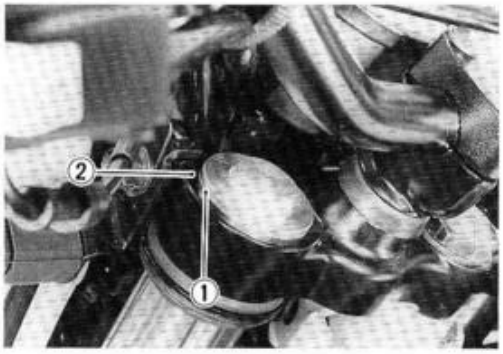

- Tighten each bolt to the specified torque.

Front fork cap bolt ③: 23 N·m (2.3 kg-m, 16.5 lb-ft)
Upper clamp bolt ④: 29 N·m (2.9 kg-m, 21.0 lb-ft)
Lower clamp bolt ⑤: 26 N·m (2.6 kg-m, 19.0 lb-ft)

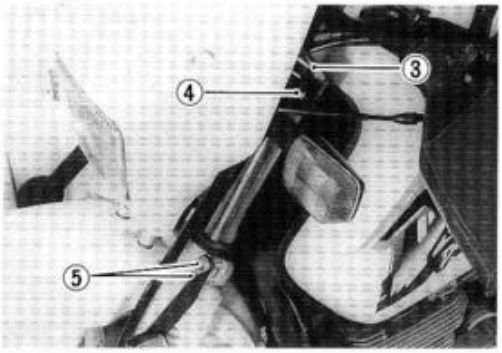

STEERING

① Handlebar clamp
② Handlebar holder
③ Cap
④ Damper (Upper)
⑤ Steering stem upper bracket
⑥ Damper (Lower)
⑦ Steering stem nut
⑧ Bearing (Upper)
⑨ Bearing (Lower)
⑩ Steering stem lower bracket

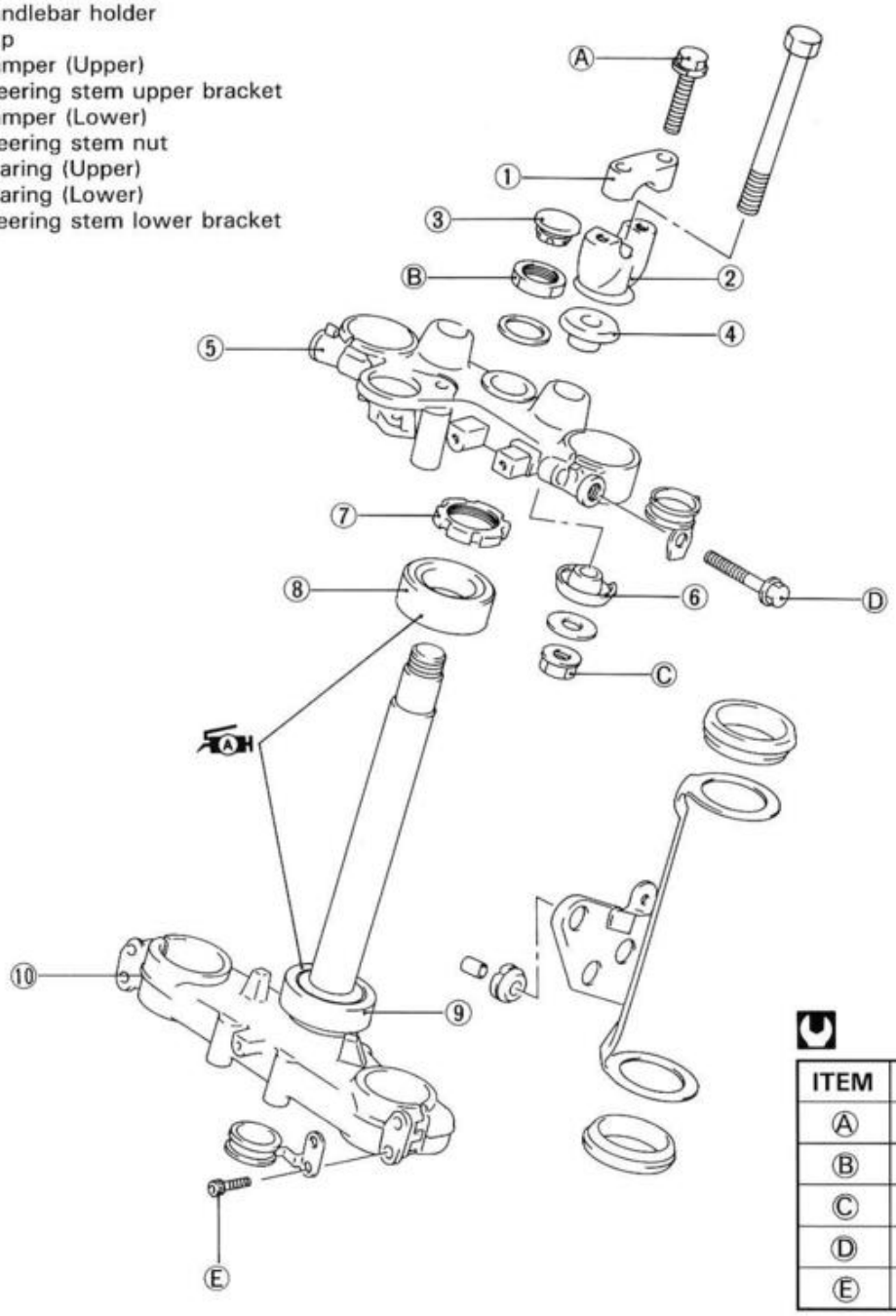

ITEM	N·m	kg-m	lb-ft
Ⓐ	23	2.3	16.5
Ⓑ	90	9.0	65.0
Ⓒ	25	2.5	18.0
Ⓓ	29	2.9	21.0
Ⓔ	26	2.6	19.0

REMOVAL AND DISASSEMBLY

- Remove the front wheel. (Refer to page 5-2.)
- Remove the front fork. (Refer to page 5-14.)
- Remove the speedometer cable clamp and the front fender.

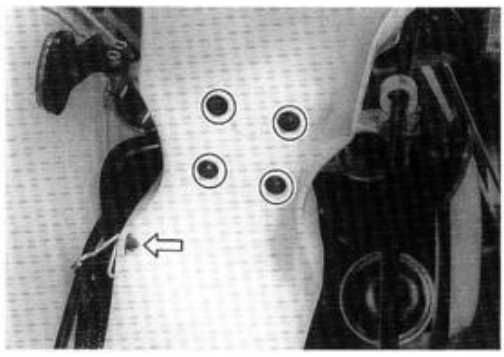

- Remove the headlight cover by removing the three screws.

- Remove the lead wire cover ①.
- Disconnect each lead wire coupler.

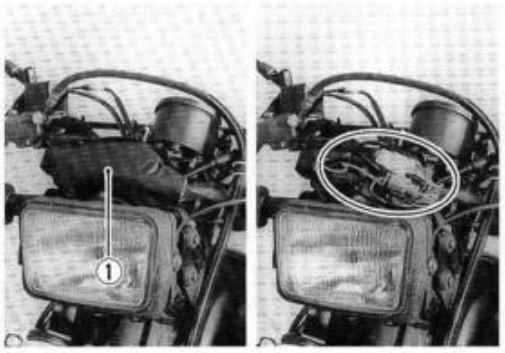

- Remove the headlight bracket with headlight by removing the four bolts.

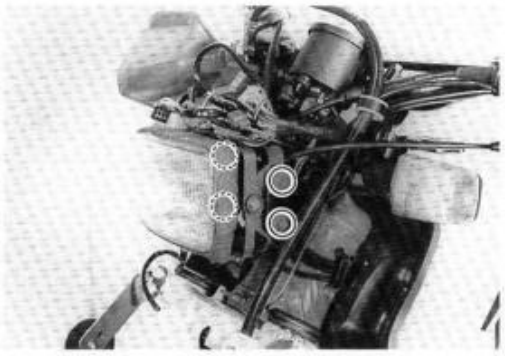

- Remove the front brake master cylinder with brake hose.
- Remove the left turn signal light.

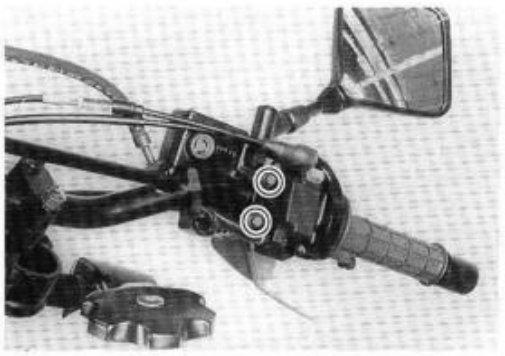

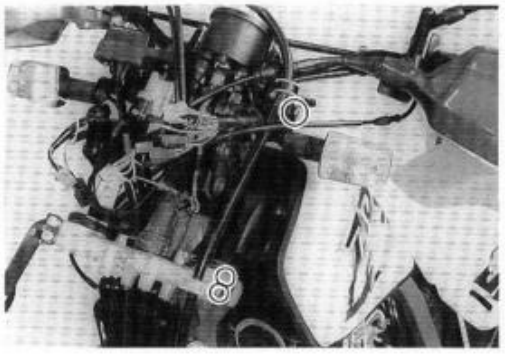

- Unlock the clamps.
- Remove the right turn signal light.

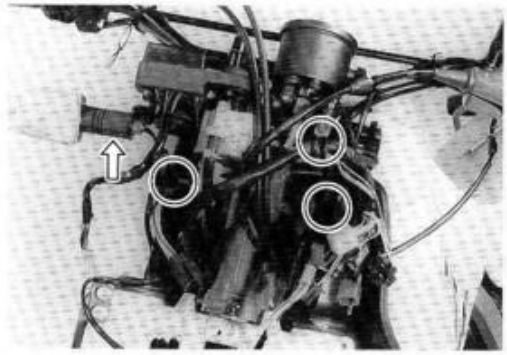

- Remove the headlight bracket holders.

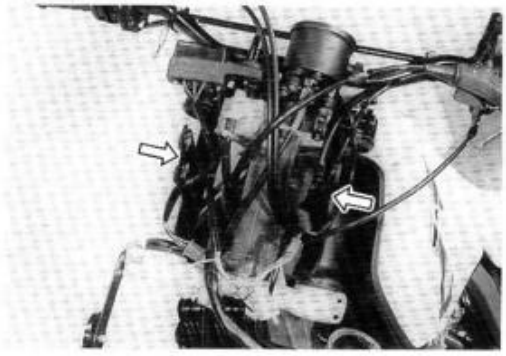

- Remove the speedometer cable ①.
- Remove the speedometer by removing the nuts.

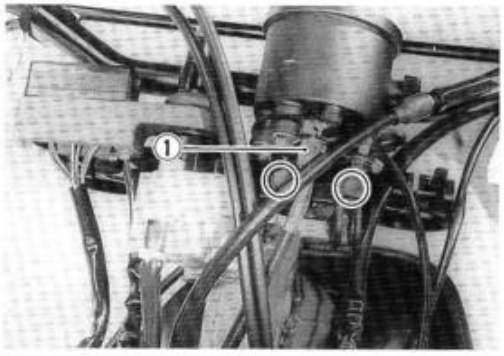

- Remove the throttle grip case screws.
- Disconnect the throttle cables.

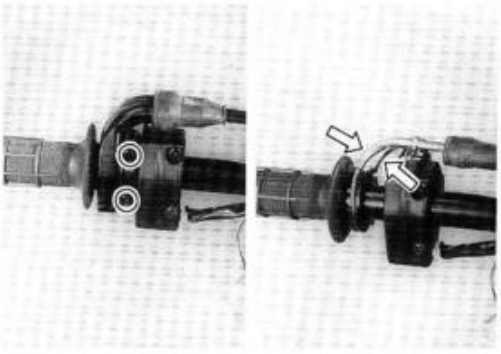

- Remove the left handlebar switch case screws.
- Disconnect the starter cable.

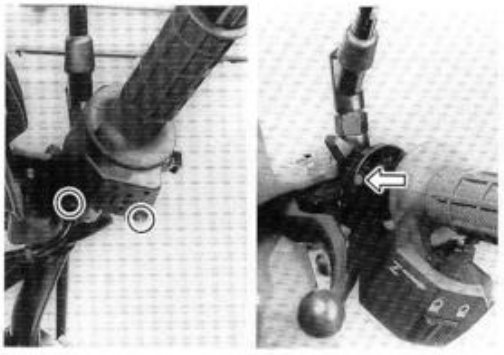

- Remove the clutch lever cover.
- Remove the clutch cable ①.

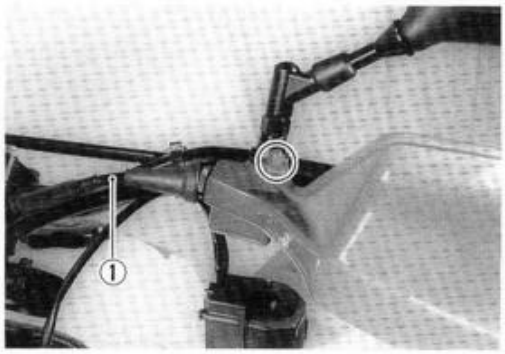

- Remove the indicator light panel ②.

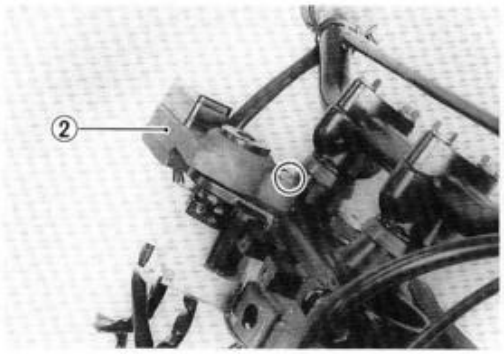

- Remove the ignition switch mounting bolts with the special tools.

TOOL **09930-11920: Torx bit JT40H**
09930-11940: Bit holder

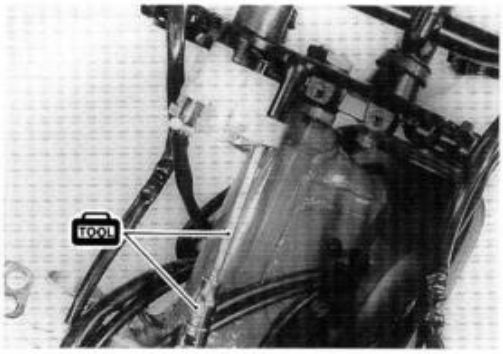

- Remove the handlebars by removing the four mounting bolts.

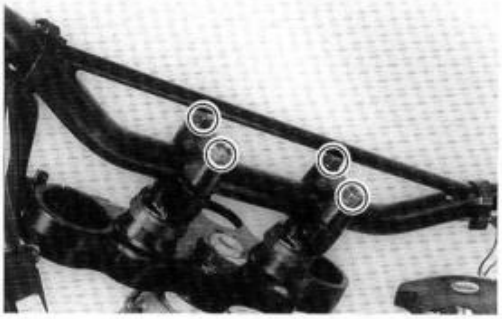

- Remove the handlebar holder by removing the mounting nuts.

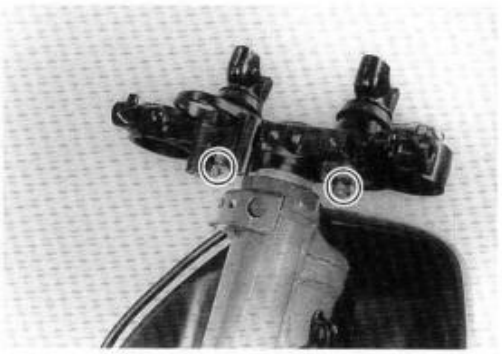

- Remove the steering stem upper bracket by removing the stem head nut.

- Loosen the steering stem nut with the special tools.

TOOL 09940-14911: Steering stem nut socket wrench
09940-14960: Steering stem nut socket

- Remove the steering stem lower bracket.

NOTE:
Hold the steering stem lower bracket by hand to prevent it from falling.

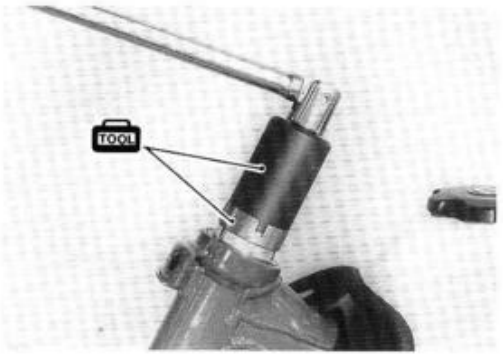

- Remove the upper bearing.

- Remove the steering stem lower bearing with a chisel.

⚠ CAUTION

The removed bearing should be replaced with a new one.

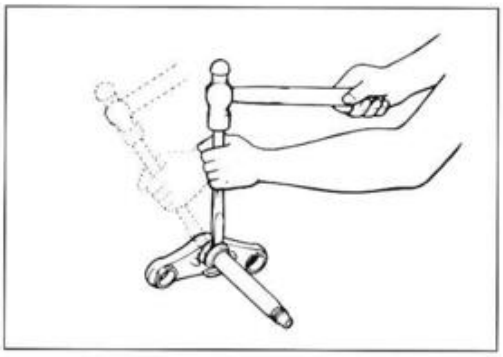

- Remove the steering stem bearing races, upper and lower with the special tools.

TOOL 09941-54911: Steering race remover
09941-74910: Steering bearing remover and installer

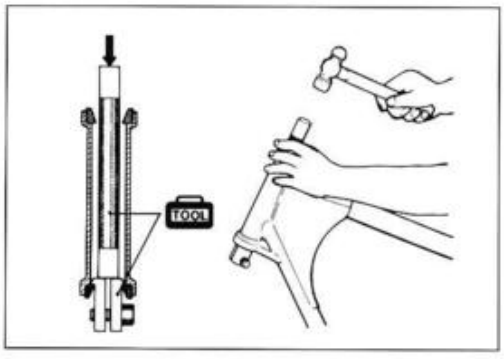

INSPECTION

Inspect the removed parts for the following abnormalities.

* Handlebars distortion
* Handlebar clamp wear
* Race wear and brinelling
* Abnormal noise of bearing
* Distortion of steering stem

Inspect the play of dampers by hands while fixing it in the steering stem upper bracket. If the play can be found, replace the dampers.

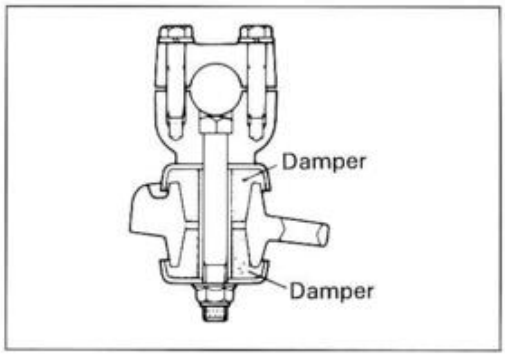

REASSEMBLY AND REMOUNTING

Reassemble and remount the steering stem in the reverse order of removal and disassembly. Pay attention to the following points:

BEARING RACES

- Press in the upper and lower bearing races with the special tool.

09941-34513: Steering outer race installer

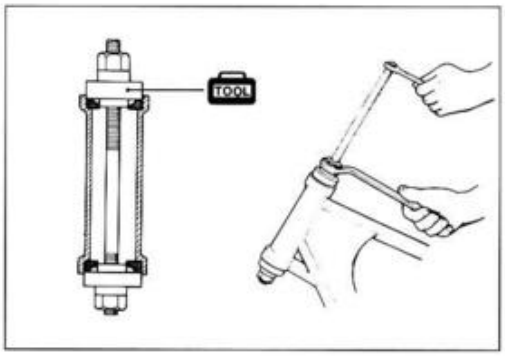

BEARING

- Press in the lower bearing with the special tool.

09925-18010: Steering bearing installer

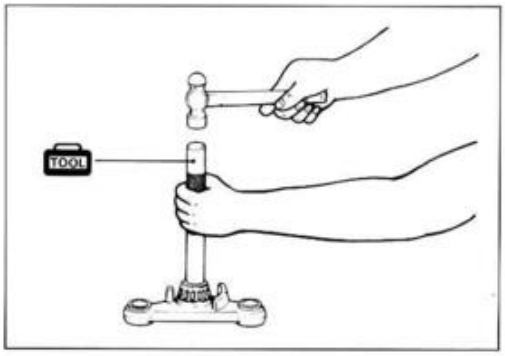

- Apply grease to the upper and lower bearings.

99000-25030: SUZUKI SUPER GREASE "A"

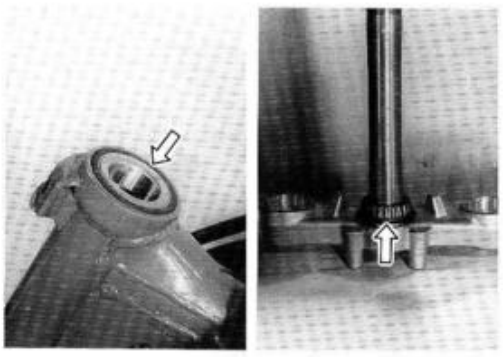

STEM NUT

- Tighten the steering stem nut to 45 N·m (4.5 kg-m, 32.5 lb-ft) with the special tools.

09940-14911: Steering stem nut wrench
09940-14960: Steering stem nut socket

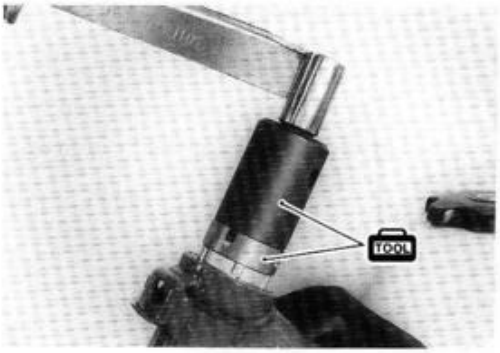

- Turn the steering stem bracket about five or six times to the left and right until it locks in position so that the taper roller bearing will be seated properly.
- Turn back the stem nut by 1/4—1/2 turn.

NOTE:
This adjustment will vary from motorcycle to motorcycle.

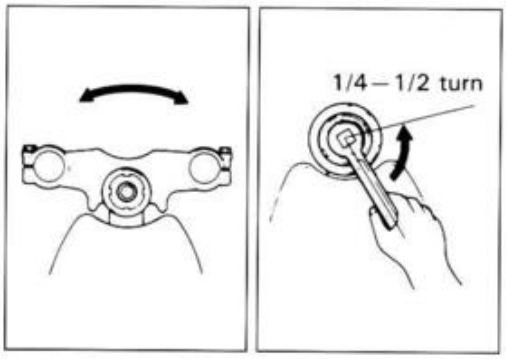

- Tighten the steering stem nut to the specified torque.

Steering stem head nut: 90 N·m (9.0 kg-m, 65.0 lb-ft)

NOTE:
Before tightening the steering stem nut, install the front fork temporarily.

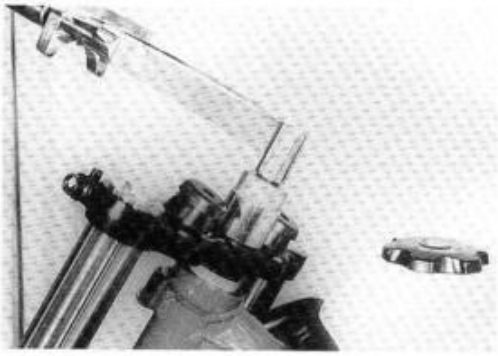

- Tighten the handlebar holder nuts to the specified torque.

Handlebar holder nut: 25 N·m (2.5 kg-m, 18.0 lb-ft)

NOTE:
Before tighten the handlebar holder nuts, install the handlebars temporarily.

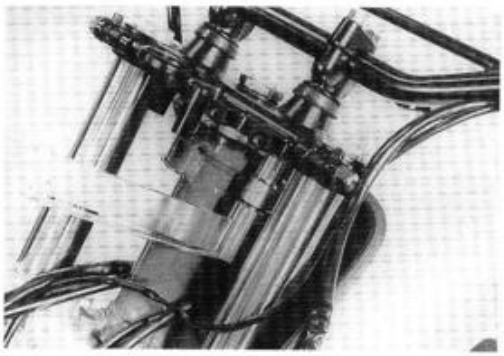

HANDLEBARS

- Set the handlebars to match its punched mark to the mating face of the holder.
- Secure the each handlebar clamp in such a way that the clearances Ⓐ ahead and behind of the handlebars are equalized.

Handlebar clamp bolt: 23 N·m (2.3 kg-m, 16.5 lb-ft)

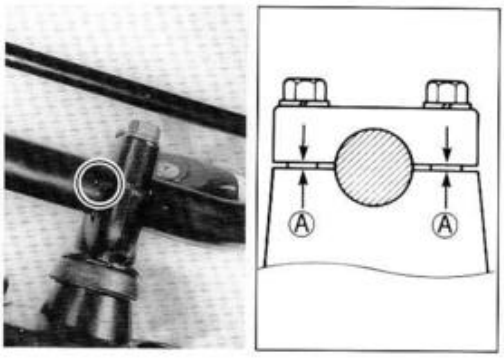

⚠ CAUTION

After performing the adjustment and installing the steering stem upper bracket, "rock" the front wheel assembly forward and back to ensure that there is no play and that the procedure was accomplished correctly. Finally check to be sure that the steering stem moves freely from left to right with own weight. If play or stiffness is noticeable, re-adjust the steering stem nut.

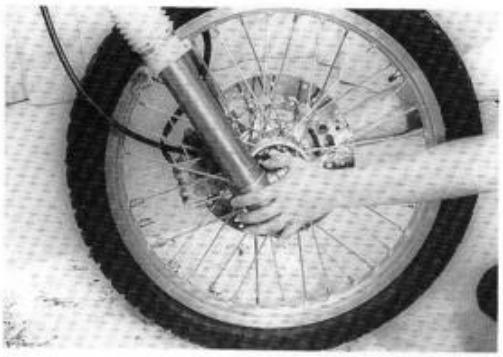

REAR WHEEL

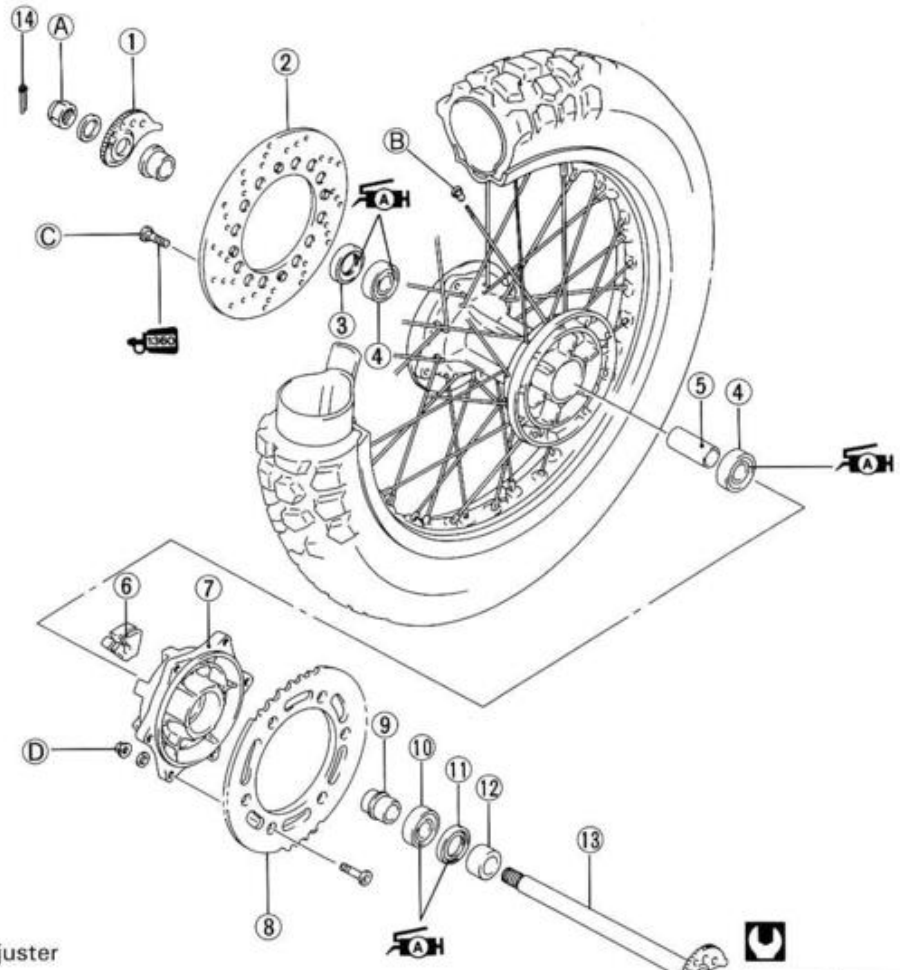

① Chain adjuster
② Disc
③ Dust seal
④ Bearing
⑤ Spacer
⑥ Damper
⑦ Sprocket drum
⑧ Rear sprocket
⑨ Spacer
⑩ Bearing
⑪ Dust seal
⑫ Spacer
⑬ Rear axle
⑭ Cotter pin (For Canada and U.S.A.)

ITEM	N·m	kg-m	lb-ft
Ⓐ	*100	*10.0	*72.5
	110	11.0	79.5
Ⓑ	4.5	0.45	3.0
Ⓒ	23	2.3	16.5
Ⓓ	27	2.7	19.5

NOTE:
Asterisk mark (*) indicates the Canada and U.S.A. models.

REMOVAL

- Remove the cotter pin. (For Canada and U.S.A.)
- Loosen the axle nut.
- Support the motorcycle with a jack.
- Remove the axle nut and axle.

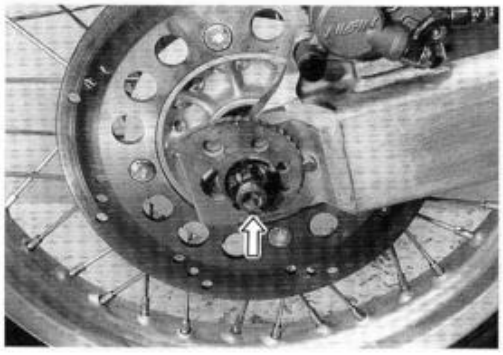

- Remove the rear wheel by disengaging the drive chain.

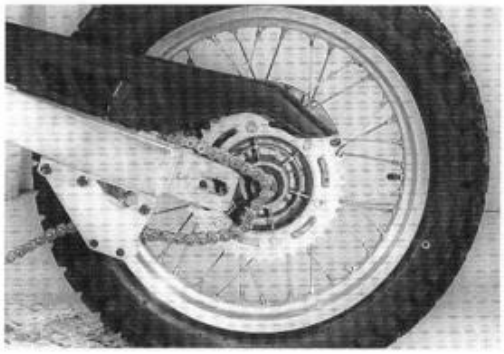

⚠ CAUTION

Do not operate the brake pedal while dismounting the rear wheel.

- Remove the rear sprocket mounting drum from the wheel.

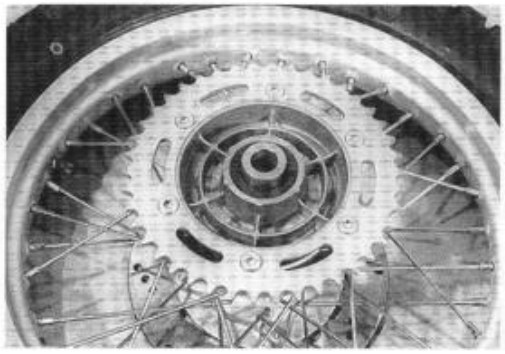

- Remove the cushions.

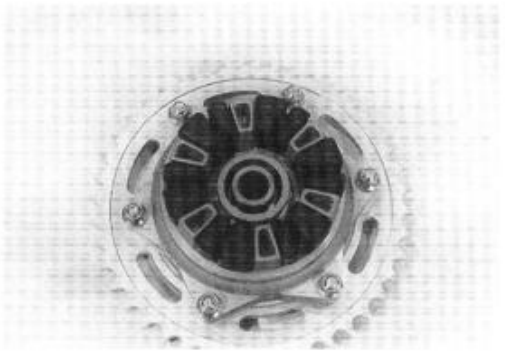

- Remove the spacer ①.
- Remove the rear sprocket by removing the mounting nuts and bolts.

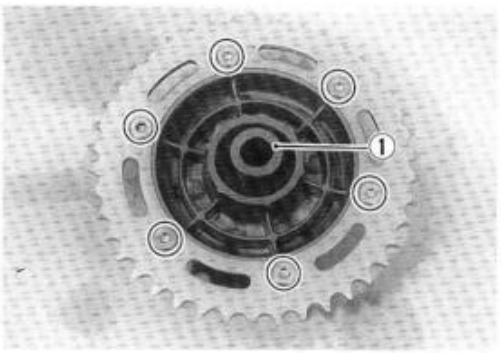

- Remove the dust seal with the special tool.

TOOL **09913-50121: Dust seal remover**

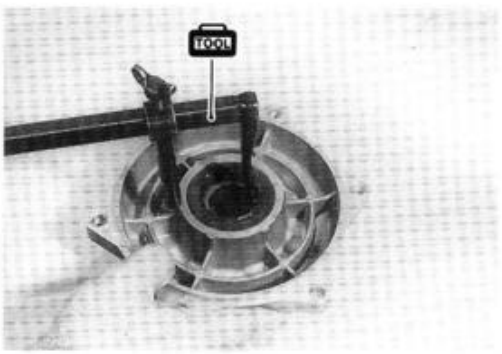

- Remove the brake disc by removing the mounting bolts.

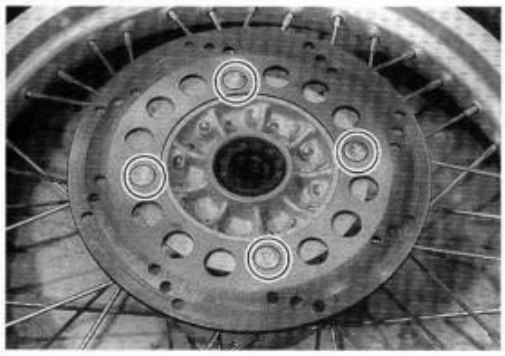

INSPECTION AND DISASSEMBLY

TIRE ..... Refer to page 2-12.
REAR WHEEL ..... Refer to page 5-10.

WHEEL BEARING AND SPROCKET DRUM BEARING

Inspect the play of bearing inner ring by hand while mounted in the wheel or sprocket drum. Rotate the inner ring by hand to inspect any abnormal noise occurs or rotating smoothly. Replace the bearing if there is anything unusual.

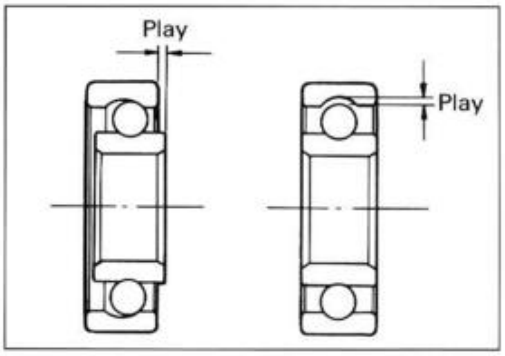

Remove the both bearing with the special tool in the following procedures.

- Insert the adapter into the bearing.

TOOL 09941-50111: Bearing remover

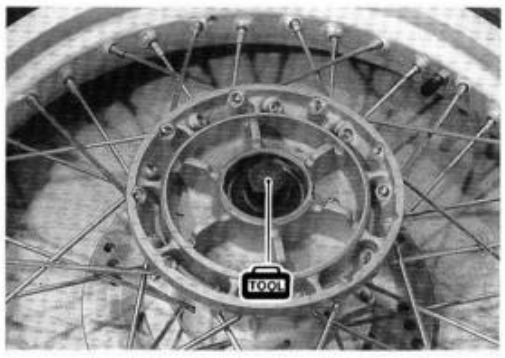

- After inserting the wedge bar from the opposit side, lock the wedge bar in the slit of the adapter.
- Drive out the bearing by hammering the wedge bar.

⚠ CAUTION

The removed bearings should be replaced with new ones.

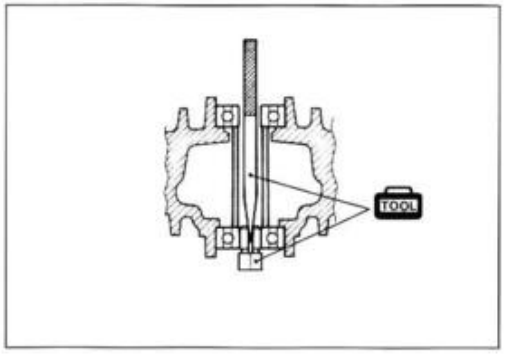

- Remove the sprocket drum bearing with the special tool.

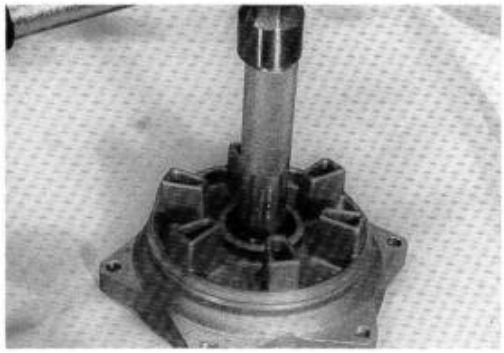

TOOL 09913-75830: Bearing remover

⚠ CAUTION

The removed bearing should be replaced with a new one.

REAR AXLE

Using a dial gauge, check the rear axle for runout.
If the runout exceeds the limit, replace the rear axle.

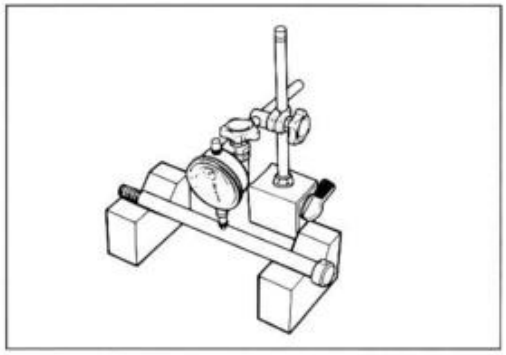

TOOL 09900-20606: Dial gauge (1/100 mm)
09900-20701: Magnetic stand
09900-21304: "V" block set

Service Limit: 0.25 mm (0.010 in)

REAR SPROCKET

Inspect the sprocket teeth for wear. If they are worn as illustrated, replace the sprocket and drive chain.

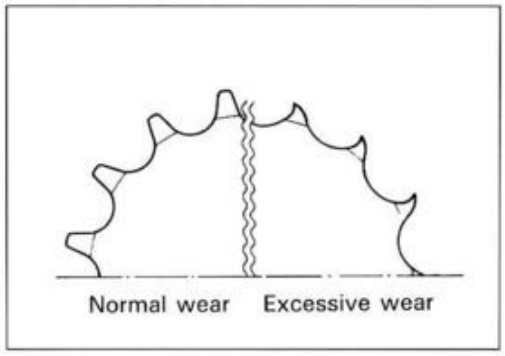

REAR SPROCKET DAMPER

Inspect the dampers for wear and damage. If any defects are found, replace the dampers as a set.

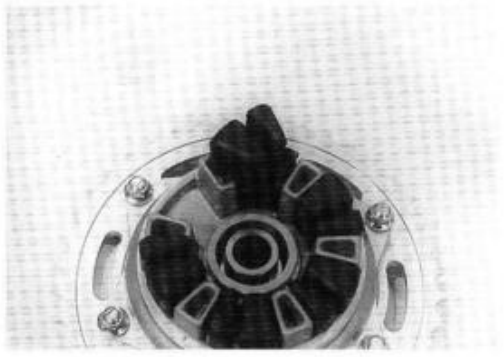

REASSEMBLY AND REMOUNTING

Reassemble and remount the rear wheel in the reverse order of removal and disassembly. Pay attention to the following points:

WHEEL BEARING

- Apply grease to the bearings.

99000-25030: SUZUKI SUPER GREASE "A"

- Install the wheel bearings with the special tools.

09924-84510: Bearing installer
09924-84521: Bearing installer

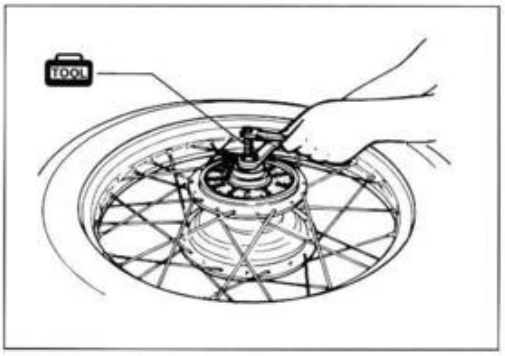

NOTE:
First install the bearing for right side. Seal side of bearing goes toward outside.

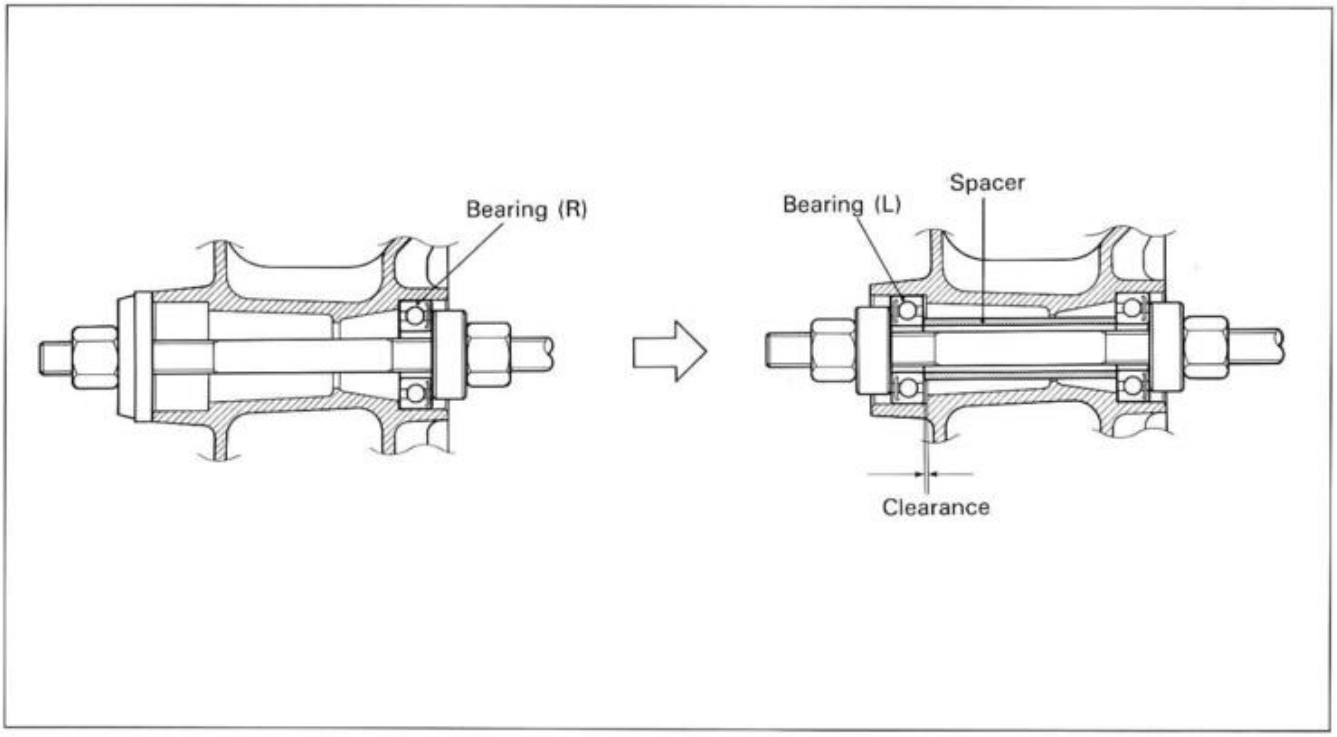

- Install the rear sprocket drum bearing by using a bearing installer.

09913-75810: Bearing installer

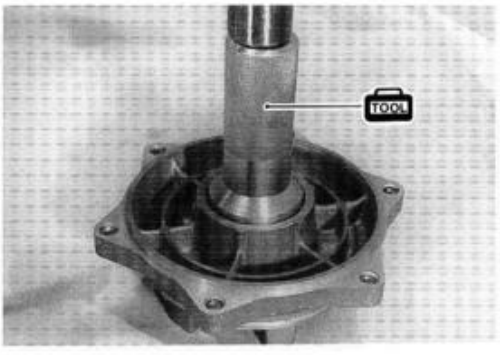

NOTE:
Seal side of bearing goes toward outside.

BRAKE DISC

- Apply THREAD LOCK SUPER "1360" to the disc bolts and tighten them to the specified torque.

NOTE:
Make sure that the brake disc is clean and free of any greasy matter.

1360 99000-32130: THREAD LOCK SUPER "1360"

Disc bolt: 23 N·m (2.3 kg-m, 16.5 lb-ft)

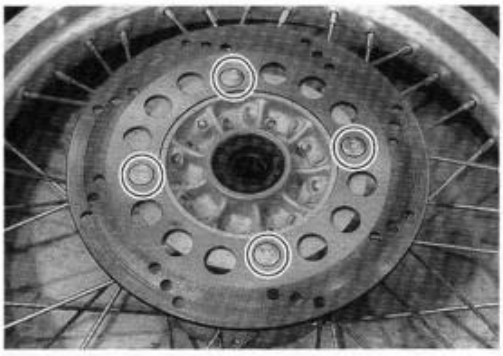

SPROCKET

- Tighten the sprocket nuts to the specified torque.

Sprocket nut: 27 N·m (2.7 kg-m, 19.5 lb-ft)

NOTE:
Face the stamped mark on the sprocket to outside.

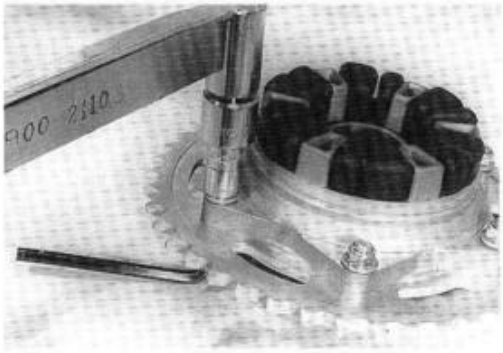

REAR AXLE NUT

- Adjust the chain slack after rear wheel installation. (Refer to page 2-9.)
- Tighten the axle nut to the specified torque.

Axle nut: 100 N·m (10.0 kg-m, 72.5 lb-ft)
... For Canada and U.S.A.
: 110 N·m (11.0 kg-m, 79.5 lb-ft)
... For the others

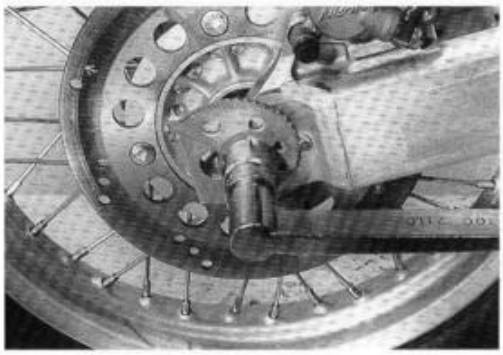

REAR BRAKE

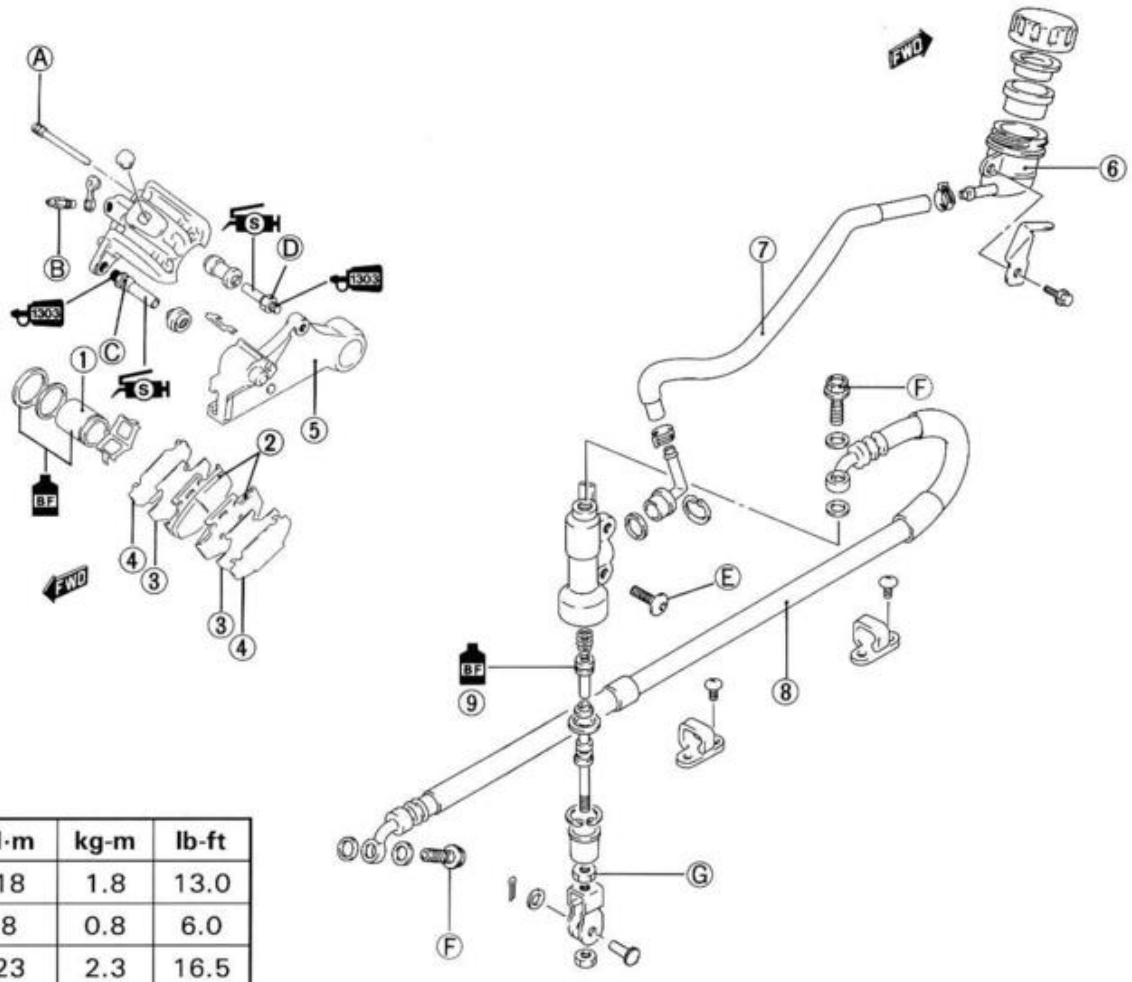

ITEM	N·m	kg-m	lb-ft
Ⓐ	18	1.8	13.0
Ⓑ	8	0.8	6.0
Ⓒ	23	2.3	16.5
Ⓓ	13	1.3	9.5
Ⓔ	10	1.0	7.0
Ⓕ	23	2.3	16.5
Ⓖ	18	1.8	13.0

① Piston
② Pad
③ Insulator
④ Shim
⑤ Caliper holder
⑥ Reservoir tank
⑦ Reservoir tank hose
⑧ Brake hose
⑨ Piston/cup set

⚠ WARNING

* This brake system is filled with a ethylene glycol-based DOT 4 brake fluid. Do not use or mix different types of fluid such as silicone-based or petroleum-based.
* Do not use any brake fluid taken from old, used or unsealed containers. Never reuse brake fluid left over from the last servicing or stored for long periods.
* When storing the brake fluid, seal the container completely and keep away from children.
* When replenishing brake fluid, take care not to get dust into fluid.
* When washing brake components, use fresh brake fluid. Never use cleaning solvent.
* A contaminated brake disc or brake pad reduces braking performance. Discard contaminated pads and clean the disc with high quality brake cleaner or neutral detergent.

⚠ CAUTION

Handle brake fluid with care: the fluid reacts chemically with paint, plastics, rubber materials etc.

BRAKE PAD REPLACEMENT

- Remove the brake pad mounting pins ①.
- Remove the inside pad first.

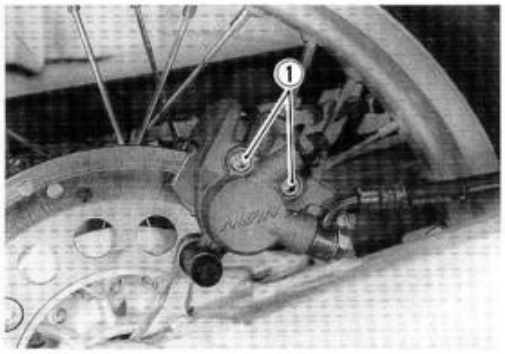

- Slide the caliper housing to outside then remove the pad ②.

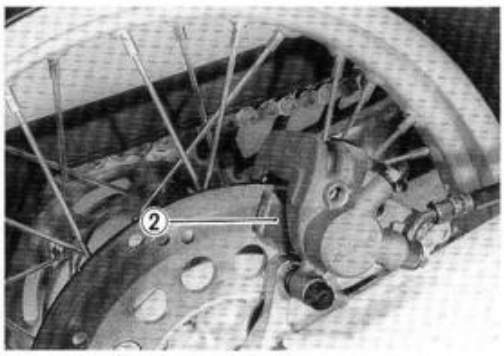

⚠ CAUTION

*** Do not operate the brake pedal while dismounting the pads.**
*** Replace the brake pad as a set, otherwise braking performance will be adversely affected.**

- Install the new pads correclty.
- Tighten the pad mounting pin ① to the specified torque.

Pad mounting pin: 18 N·m (1.8 kg-m, 13.0 lb-ft)

NOTE:
After replacing the brake pads, pump with brake pedal few times to operate the brake correctly and then check the brake fluid level.

BRAKE FLUID REPLACEMENT

- Remove the reservoir tank mounting bolt.
- Replace brake fluid in the same manner of the front brake. (Refer to page 5-7.)

Specification and classification: DOT 4

⚠ CAUTION

Bleed air in the brake fluid circuit. (Refer to page 2-11.)

CALIPER REMOVAL AND DISASSEMBLY

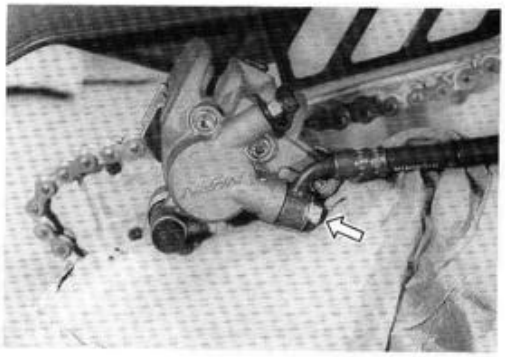

- Remove the rear wheel. (Refer to page 5-27.)
- Place a rag underneath the union bolt on the brake caliper to catch any spilled drops of brake fluid.
- Remove the union bolt and catch brake fluid in a suitable receptacle.

⚠ CAUTION

Never reuse the brake fluid left over from previous servicing and stored for long periods.

⚠ WARNING

Brake fluid, if it leaks, will interfere with safe running and discolor painted surfaces. Check the brake hose and hose joints for cracks and fluid leakage.

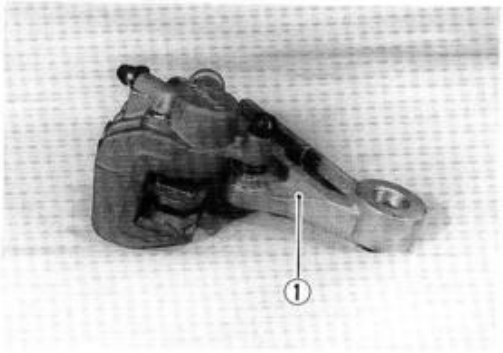

- Remove the caliper with caliper holder.
- Remove the caliper holder ①.
- Remove the pads. (Refer to page 5-34.)

- Place a rag over the piston to prevent popping up. Force out the piston with an air gun.

⚠ CAUTION

Do not use high pressure air to prevent piston damage.

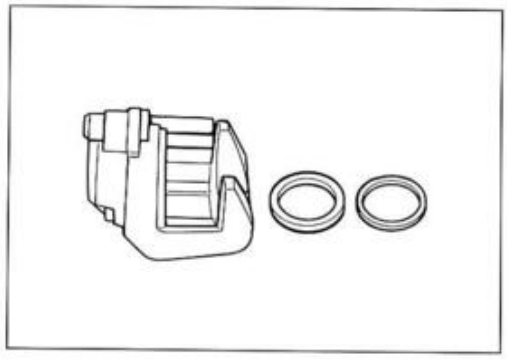

- Remove the dust seal and piston seal.

⚠ CAUTION

Do not reuse the removed seals to prevent fluid leakage.

CALIPER AND DISC INSPECTION

Inspect the caliper cylinder bore wall for nicks, scratches or other damage.

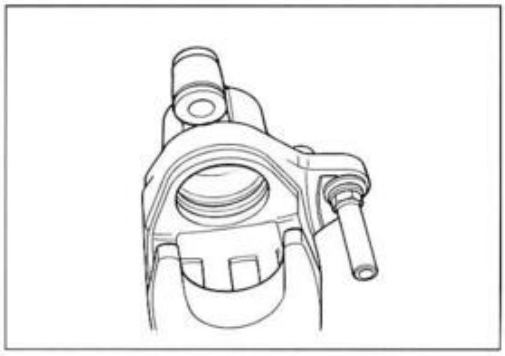

Inspect the pistons for damage and wear.

DISC ..... Refer to page 5-10.

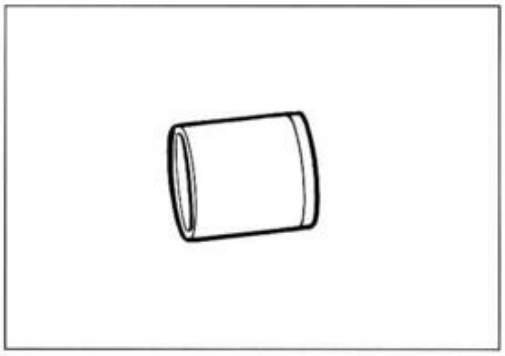

CALIPER REASSEMBLY AND REMOUNTING

Reassemble and remount the caliper in the reverse order of removal and disassembly. Pay attention to the following points:

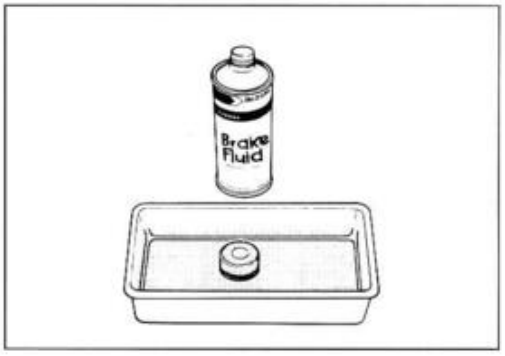

⚠ CAUTION

*** Wash the caliper components with fresh brake fluid before reassembly. Never use cleaning solvent or gasoline to wash them.**
*** Apply brake fluid to the caliper bore and piston to be inserted into the bore.**

BF Specification and classification: DOT 4

- Tighten the brake hose union bolt to the specified torque.

Brake hose union bolt: 23 N·m (2.3 kg-m, 16.5 lb-ft)

⚠ CAUTION

Bleed air from the system after reassembling the caliper. (Refer to page 2-11.)

MASTER CYLINDER REMOVAL AND DISASSEMBLY

- Place a cloth underneath the union bolt on the master cylinder to catch spilled drops of brake fluid.

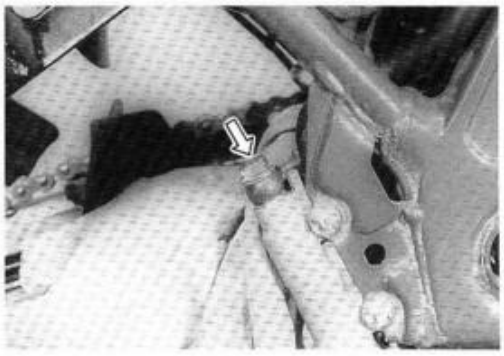

- Loosen the rear brake rod lock nut ①.
- Remove the master cylinder mounting bolts ②.
- Disconnect the brake rod by rotating brake rod ③.

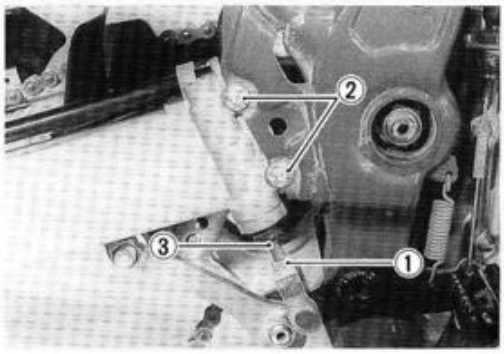

- Disconnect the brake hose ④.
- Remove the reservoir tank by removing the mounting bolt ⑤.

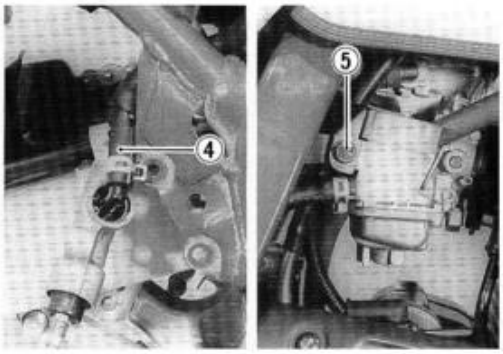

- Remove the connector by removing the circlip ⑥.

TOOL 09900-06108: Snap ring pliers

- Remove the O-ring ⑦.

⚠ CAUTION

The removed O-ring should be replaced with a new one.

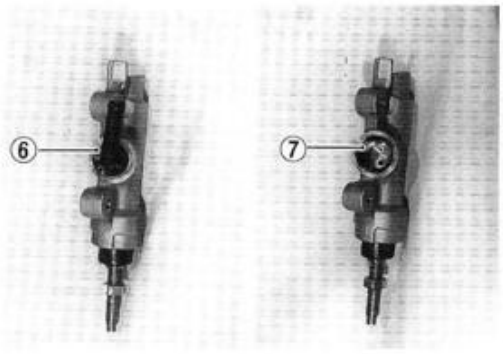

- Remove the dust boot.
- Remove the circlip with the special tool.

TOOL 09900-06108: Snap ring pliers

- Remove the rod, piston, primary cup and spring.

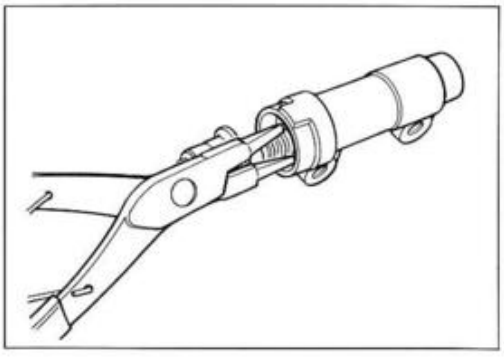

MASTER CYLINDER INSPECTION

Inspect the cylinder bore wall for any scratches or other damage.

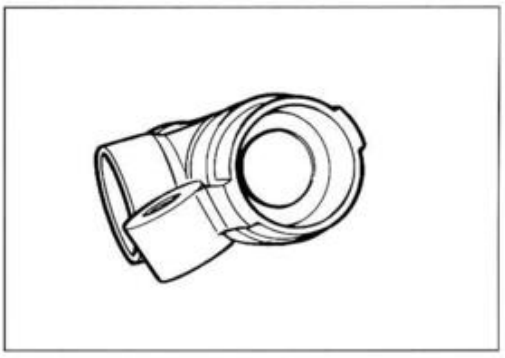

Inspect the piston surface for scratches or other damage.
Inspect the primary cup for damage.

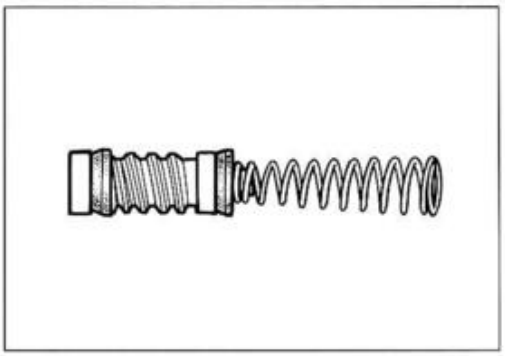

MASTER CYLINDER REASSEMBLY AND REMOUNTING

Reassemble and remount the master cylinder in the reverse order of removal and disassembly. Pay attention to the following points:

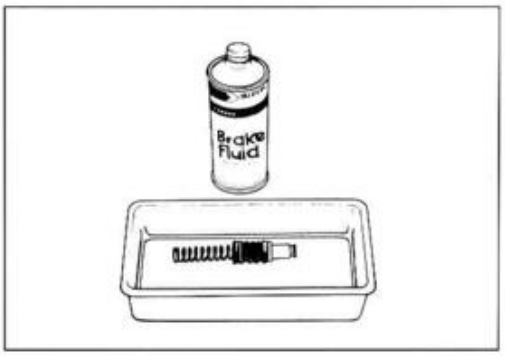

⚠ CAUTION

*** Wash the master cylinder components with fresh brake fluid before reassembly. Never use cleaning solvent or gasoline to wash them.**
*** Apply brake fluid to the cylinder bore and all the internals to be inserted into the bore.**

BF Specification and classification: DOT 4

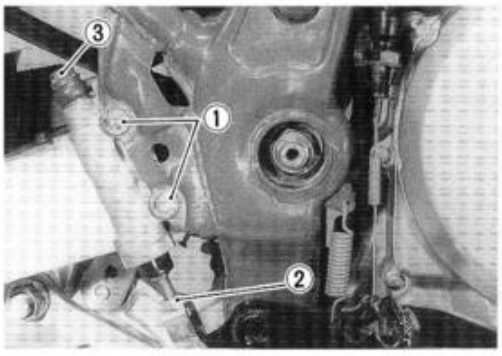

MASTER CYLINDER

- Tighten the bolts and nut to the specified torque.

Master cylinder mounting bolt ① : 10 N·m (1.0 kg-m, 7.0 lb-ft)
Master cylinder rod lock nut ② : 18 N·m (1.8 kg-m, 13.0 lb-ft)
Brake hose Union bolt ③ : 23 N·m (2.3 kg-m, 16.5 lb-ft)

⚠ CAUTION

*** Bleed air from the system after reassembling master cylinder. (Refer to page 2-11.)**
*** Adjust the brake pedal height. (Refer to page 2-11.)**

REAR SWINGARM AND SUSPENSION

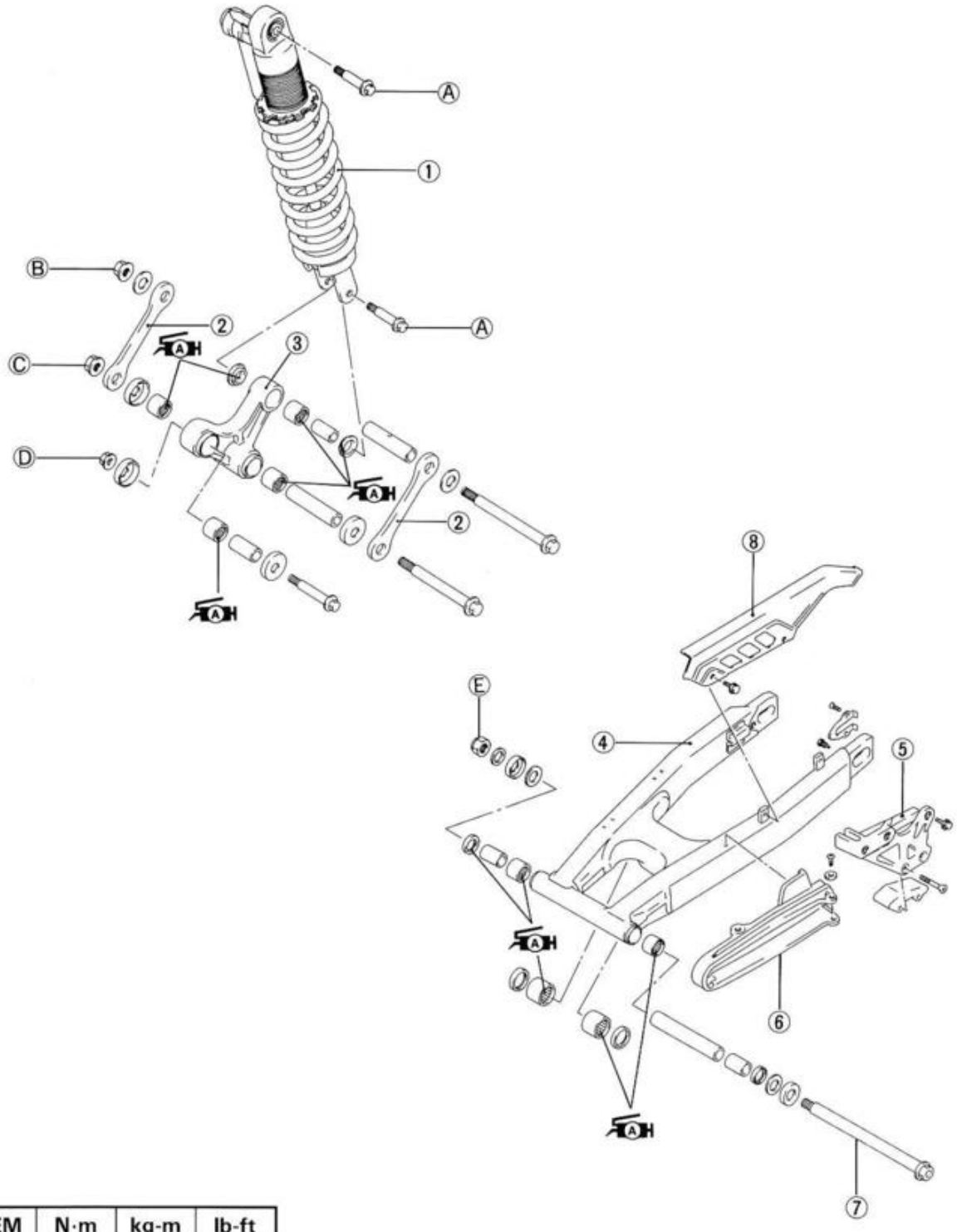

ITEM	N·m	kg-m	lb-ft
Ⓐ	55	5.5	40.0
Ⓑ	100	10.0	72.5
Ⓒ	100	10.0	72.5
Ⓓ	80	8.0	58.0
Ⓔ	77	7.7	55.5

① Shock absorber
② Cushion rod
③ Cushion lever
④ Swingarm
⑤ Chain guide
⑥ Chain buffer
⑦ Rear axle
⑧ Chain cover

REMOVAL

- Remove the frame covers and seat. (Refer to page 5-1.)
- Remove the rear wheel. (Refer to page 5-27.)
- Loosen the carburetor clamp screw ①.
- Disconnect the crankcase breather hose ②.

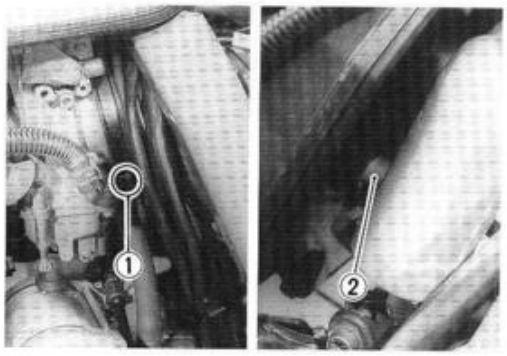

- Remove the air cleaner by removing the mounting bolts ③.

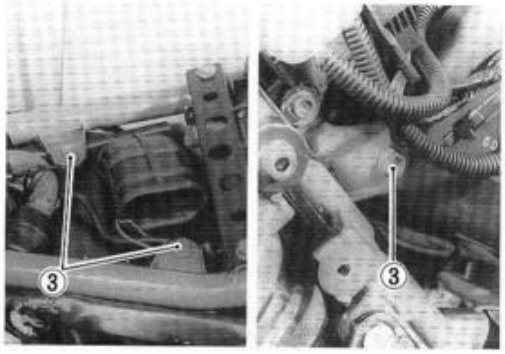

- Disconnect the brake hose from the hose guides.

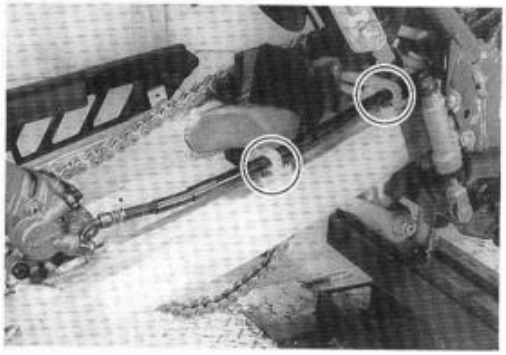

- Remove the drive chain cover and guide.

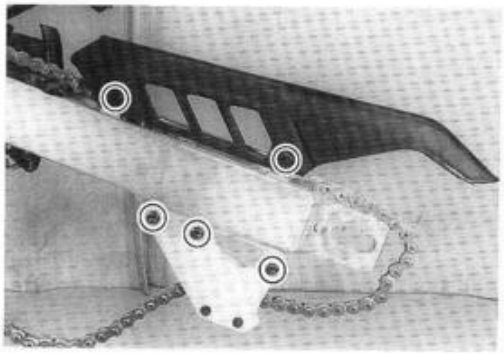

- Remove the rear shock absorber lower mounting bolt ④.
- Remove the cushion lever mounting nut ⑤ and bolt.

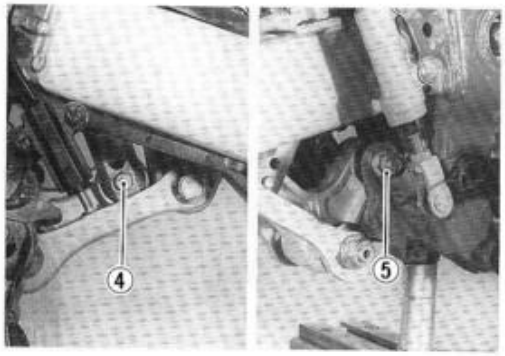

- Remove the rear swingarm pivot nut after removing the caps.
- Remove the rear swingarm by removing the pivot shaft.

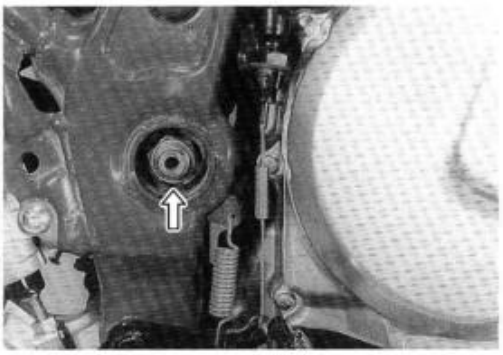

- Remove the rear shock absorber.

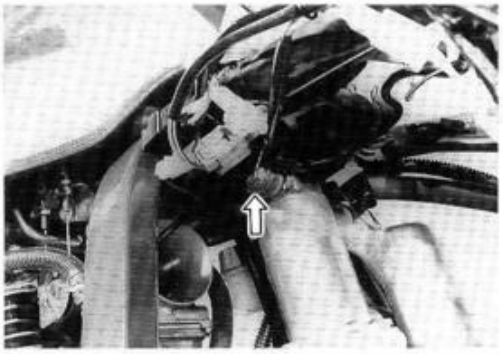

- Remove the cushion rods with cushion lever.

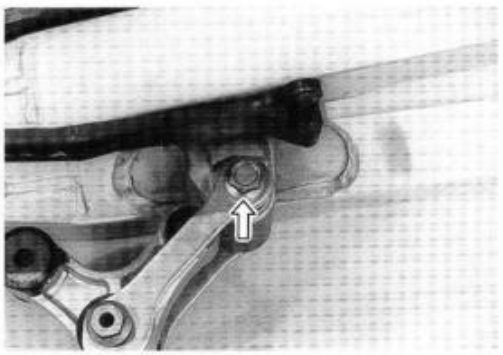

- Remove the drive chain buffer.

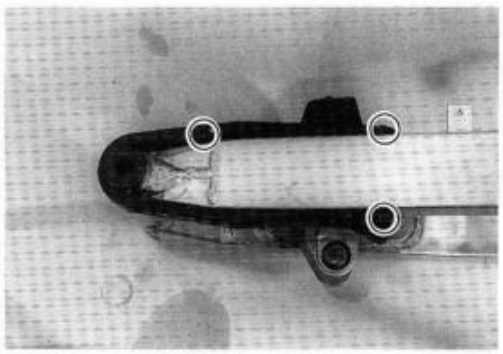

- Remove the brake hose guides and mud guard.

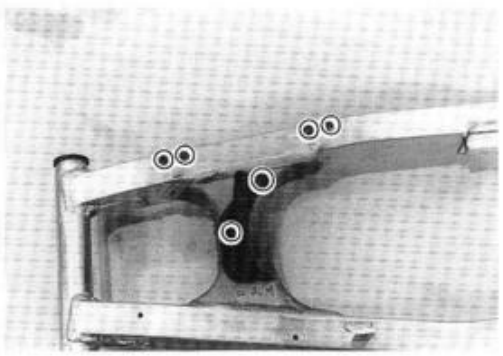

- Remove the cushion rods.

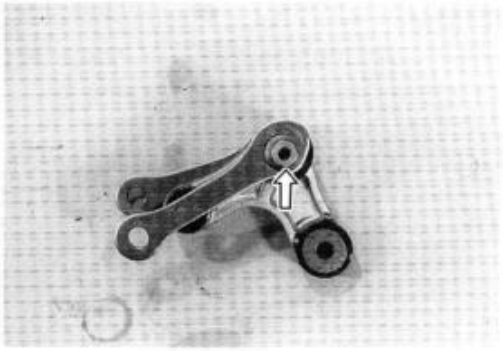

- Remove the swingarm dust seals and spacers.

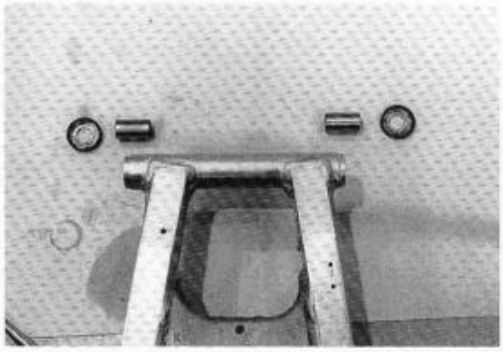

- Remove the cushion lever dust seals and spacers.

INSPECTION AND DISASSEMBLY

SWINGARM

Inspect the swingarm for wear or damage.
Inspect the spacer for any flaws or other damage.
Insert the spacer into the bearing and check the play to move the spacer up and down.
If an excessive play is noted, replace the bearing with a new one.

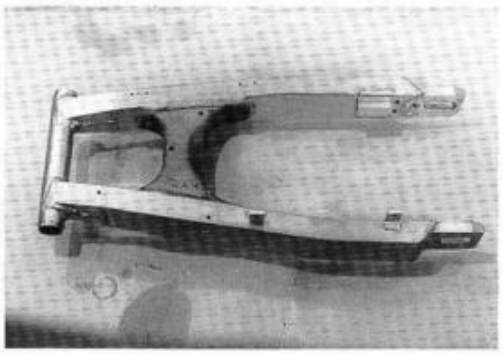

- Draw out the swingarm bearings and spacer with the special tools.

TOOL 09923-74510: Bearing remover
09930-30102: Sliding shaft

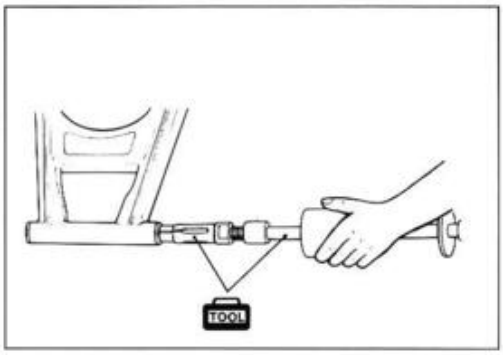

⚠ CAUTION

The romoved bearings should be replaced with new ones.

CUSHION LEVER

Inspect the spacer for any flaws or other damage.
Insert the spacer into the bearing and check the play to move the spacer up and down. If an excessive play is noted, replace the bearing with new ones.

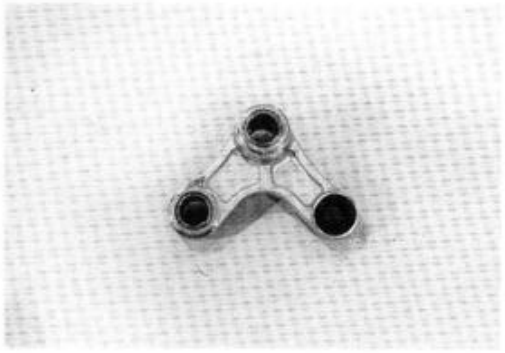

- Draw out the bearing with the special tools and appropriate tool.

TOOL 09923-73210: Bearing remover
09930-30102: Sliding shaft

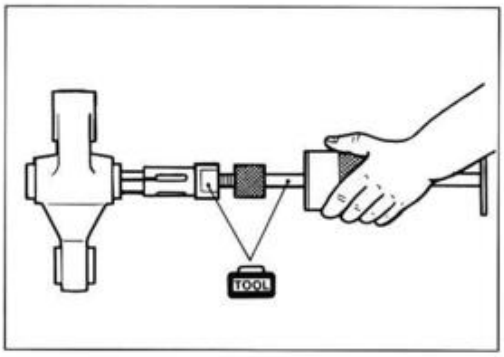

⚠ CAUTION

The removed bearing should be replaced with new ones.

SHOCK ABSORBER

Inspect the shock absorber for oil leakage or other damage. If any defects are found, replace the shock absorber with new a one.

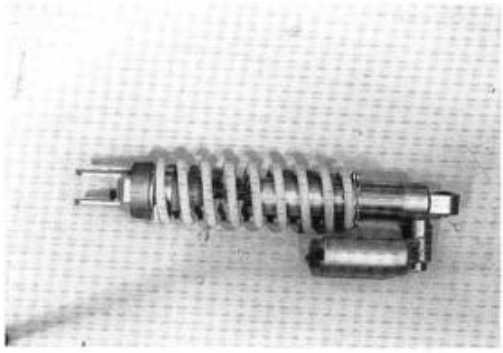

SWINGARM PIVOT SHAFT

Using a dial gauge, check the pivot shaft runout and replace it if the runout exceeds the limit.

TOOL 09900-20606: Dial gauge
09900-20701: Magnetic stand
09900-21304: V-block

Service Limit: 0.3 mm (0.01 in)

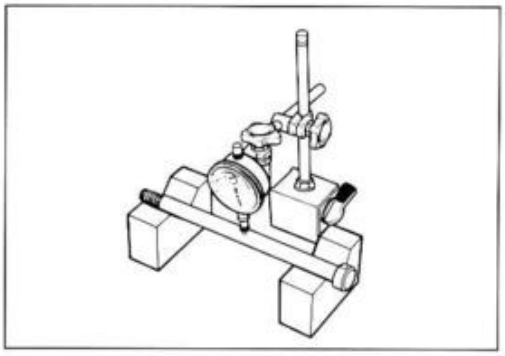

REASSEMBLY AND REMOUNTING

Reassemble and remount the rear swingarm and suspension in the reverse order of removal and disassembly. Pay attention to the following points:

SWINGARM BEARING

- Install the new bearing with the special tool.

TOOL 09941-34513: Bearing installer

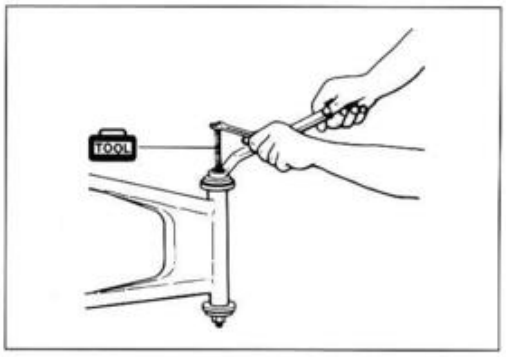

NOTE:
When installing the bearing, punch-marked side of bearing faces outside.

CUSHION LEVER BEARING

- Install the new bearing with the special tool.

TOOL 09924-84521: Bearing installer

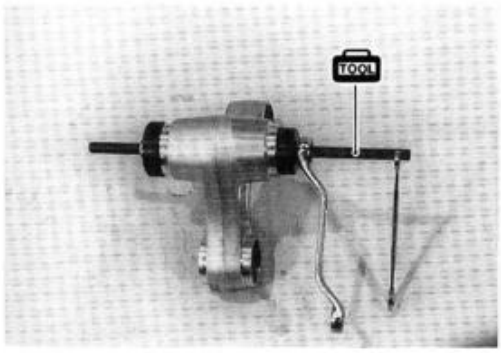

NOTE:
When installing the bearing, punch-mark side of bearing faces outside.

- Remount the rear suspension. (Refer to page 5-45.)

REASSEMBLING INFORMATION

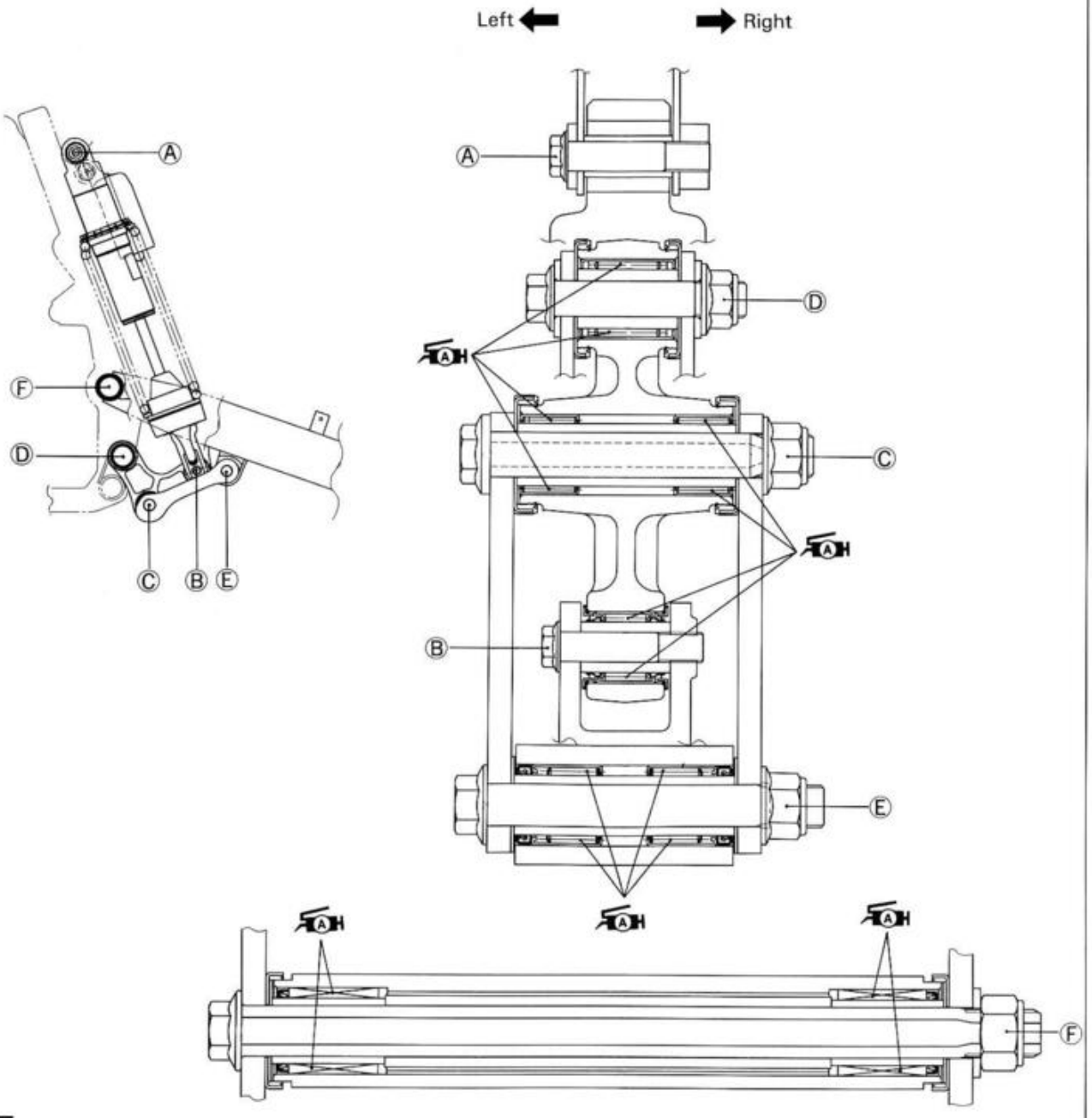

ITEM	N·m	kg-m	lb-ft
Ⓐ	55	5.5	40.0
Ⓑ	55	5.5	40.0
Ⓒ	100	10.0	72.5
Ⓓ	80	8.0	58.0
Ⓔ	100	10.0	72.5
Ⓕ	77	7.7	55.5

FINAL INSPECTION AND ADJUSTMENT

After installing the rear suspension and wheel, the following adjustments are required before driving.

* Drive chain ..... Page 2- 9.
* Rear brake pedal height ..... Page 2-11.
* Tire pressure ..... Page 2-13.

SHOCK ABSORBER SPRING PRE-LOAD ADJUSTMENT

Spring pre-load is adjustable by changing the spring adjuster ring position after removing the shock absorber. Turning the spring adjuster ring counterclockwise or clockwise as viewed from for increase or decrease the spring pre-load after loosening the adjuster lock ring. The standard set length is 247.5 mm.

After adjusting the pre-load, tighten the spring adjuster lock ring securely.

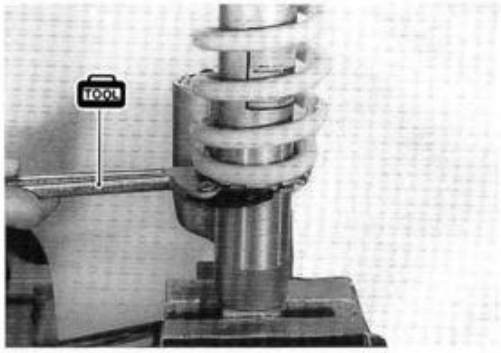

TOOL 09910-60611: Universal clamp wrench

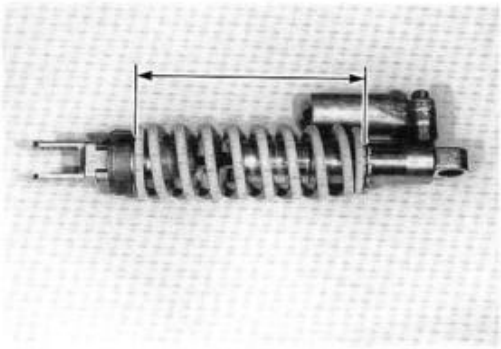

⚠ CAUTION

Do not set the spring to the length less than 238.5 mm (9.4 in).

SPRING SETTING TABLE

	Spring pre-set length
Softest	253.5 mm (10.0 in)
Standard	**247.5 mm (9.7 in)**
Stiffest	238.5 mm (9.4 in)

SHOCK ABSORBER DAMPING FORCE ADJUSTMENT

Fully turn the damping force adjuster clockwise. It is at stiffest position and turn it out to the standard setting position.

STD position: 8 clicks turns out

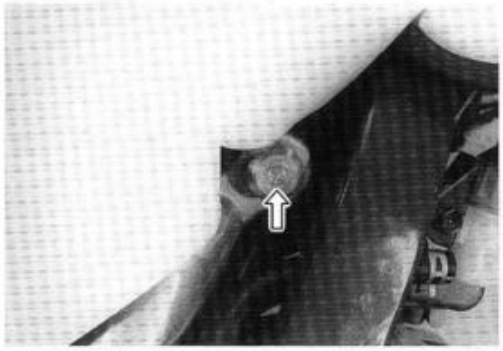

LOWERING THE SEAT HEIGHT

The seat height can be lowered 40 mm by changing the location of the inner parts of the front fork and rear shock absorber and replace the optional side stand.

OPTIONAL PARTS SUPPLY

Part No.		Part Name	PCS	Note
42300-32820	Non	Side stand Ⓐ (Silver painting)	1	For E-03 E-24 E-28 E-33
	09248-10006	Plug	1	
	62184-32E00	Plate	1	
	68380-32E10	Label set	1	
42300-32810	Non	Side stand Ⓑ (Silver painting)	1	For the others
	09248-10006	Plug	1	
	62184-32E00	Plate	1	
	68380-32E00	Label set	1	

NOTE:
Side stand length Ⓐ is defferent from Ⓑ in the above chart.

SPECIAL TOOLS

This special tool is used for loosening and tightening the front fork damper rod bolt.
09940-34520: "T" handle

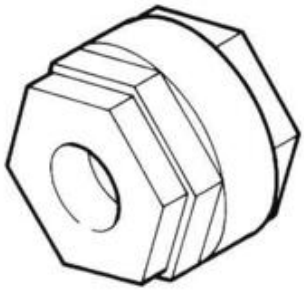

This special tool is used with tool (09940-34520) for loosening and tightening the front fork damper rod bolt.
09940-34592: Attachment "G"

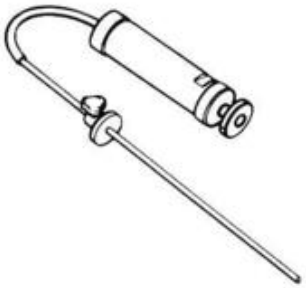

This special tool is used for adjusting the front fork oil level.
09943-74111: Front fork oil level gauge

This special tool is used for loosening and tightening the rear shock absorber ring.
09910-60611: Universal clamp wrench

FRONT FORK

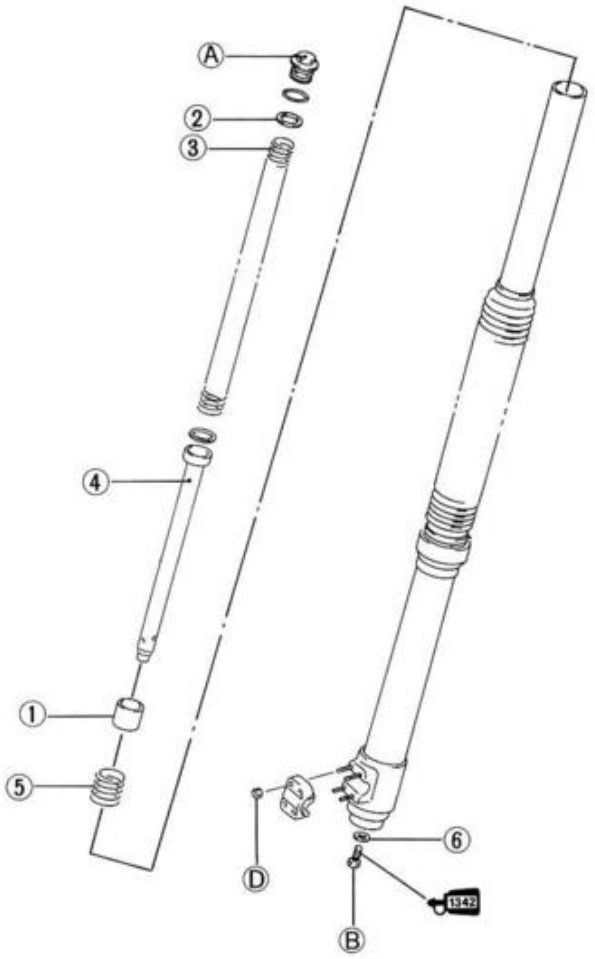

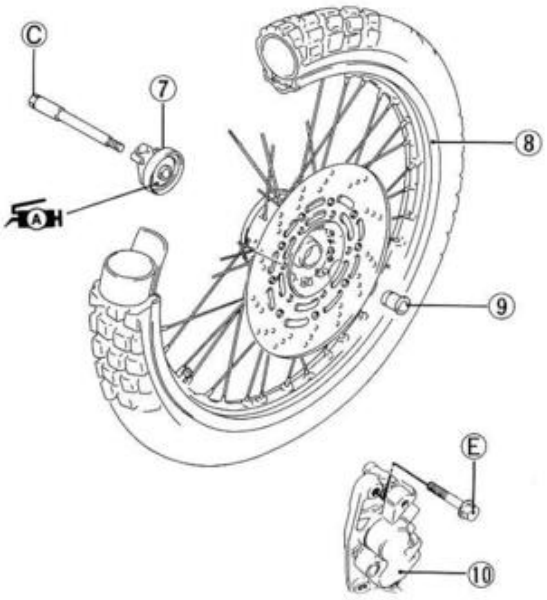

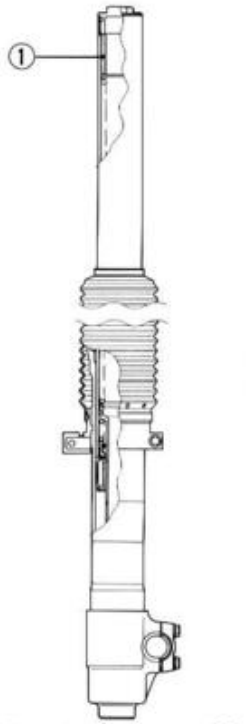

Standard spacer ① position

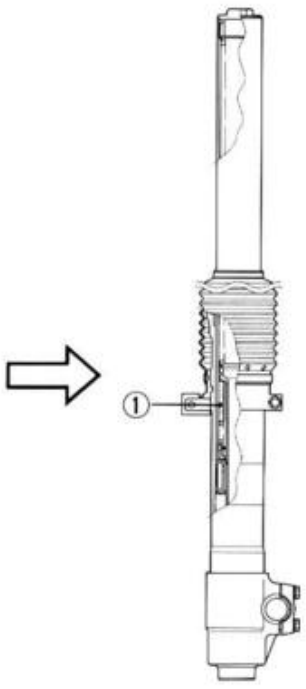

Changed spacer ① position

① Spacer
② Washer
③ Spring
④ Damper
⑤ Spring
⑥ Gasket
⑦ Speedometer gearbox
⑧ Front wheel
⑨ Spacer
⑩ Front brake caliper

ITEM	N·m	kg-m	lb-ft
Ⓐ	23	2.3	16.5
Ⓑ	30	3.0	21.5
Ⓒ	65	6.5	47.0
Ⓓ	10	1.0	7.0
Ⓔ	26	2.6	19.0

REMOVAL AND DISASSEMBLY

- Loosen the front axle holder nuts ① and axle ②.
- Carefully position a jack under the chassis tubes and raise until the front wheel is slightly off the ground.
- Remove the front wheel by removing the axle.

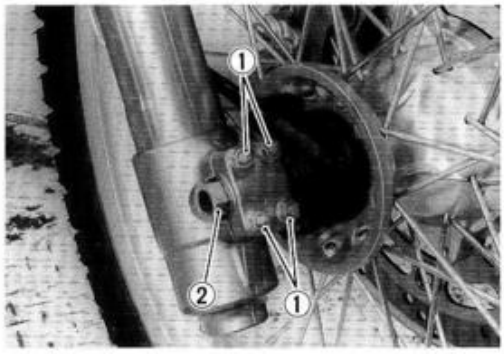

- Remove the front brake caliper mounting bolts ③.
- Remove the front brake hose clamp bolt ④ and speedometer cable guide bolt ⑤.

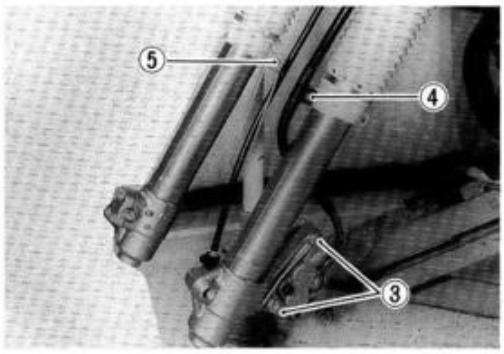

- Slightly loosen the front fork cap bolt ⑥ after loosening the front fork upper clamp bolt ⑦ to facilitate later disassembly.
- Remove the front fork by loosening the lower clamp bolts ⑧.
- Remove the other side front fork the same way.

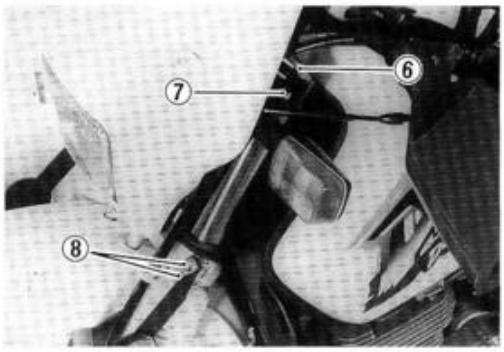

- Remove the front fork cap bolt ⑥, spacer ⑨, washer ⑩ and spring ⑪.

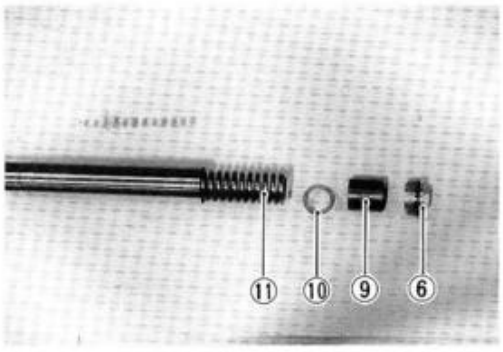

- Invert the front fork and stroke it several times to drain fork oil.

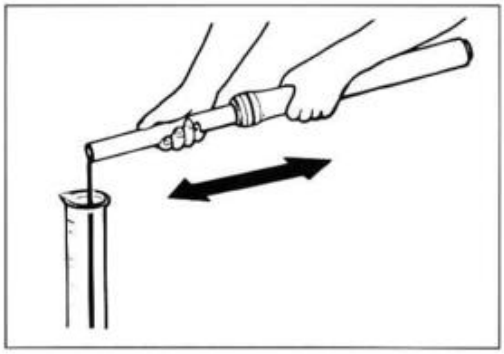

- Remove the damper rod bolt with a 8 mm hexagon wrench and special tools.

09940-34520: "T" handle
09940-34592: Attachment "G"

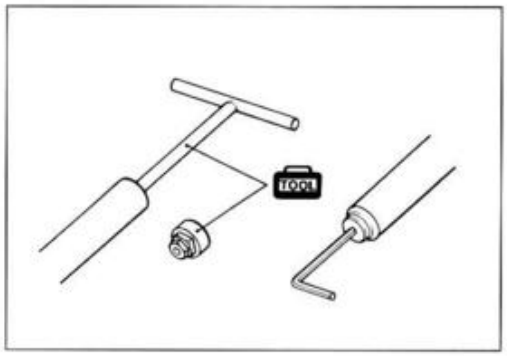

- Remove the damper rod ① with spring ②.

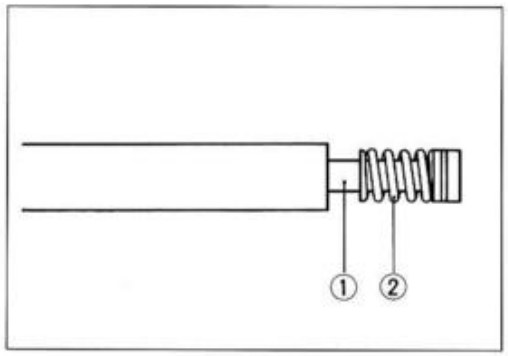

REASSEMBLY AND REMOUNTING

Reassemble and remount the front fork and front wheel in the reverse order of removal and disassembly. Pay attention to the following points:

- Install the removed spacer ③ and spring ② to the damper rod as shown in the photo.

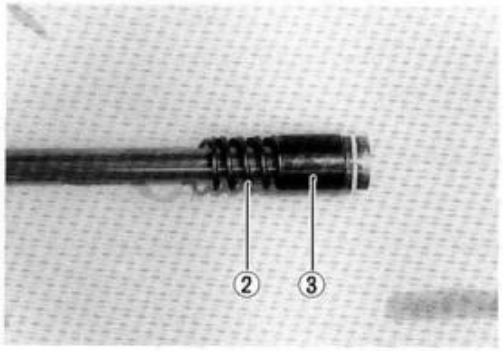

- Insert the damper rod assembly to the inner tube with the special tool.

09940-34520: "T" handle
09940-34592: Attachment "G"

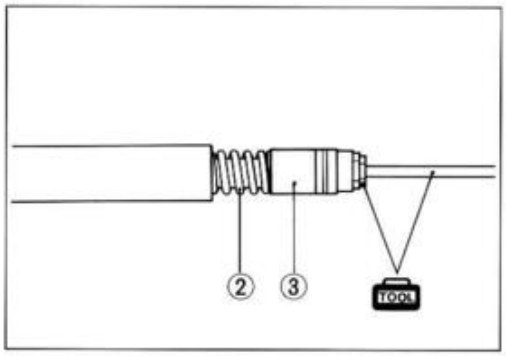

- Apply THREAD LOCK "1342" to the damper rod bolt.

99000-32050: THREAD LOCK "1342"

⚠ CAUTION

Use a new gasket ④ to prevent oil leakage.

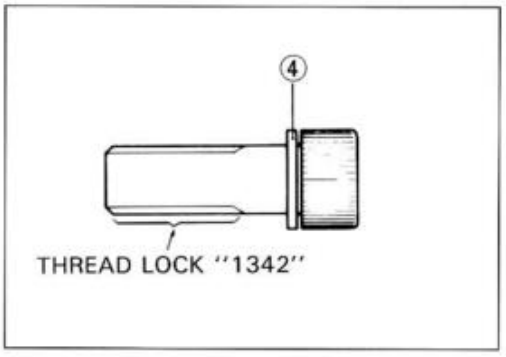

- Tighten the damper rod bolt to the specified torque with a 8 mm hexagon wrench and special tools.

Damper rod bolt: 30 N·m (3.0 kg-m, 21.5 lb-ft)

09940-34520: "T" handle
09940-34592: Attachment "G"

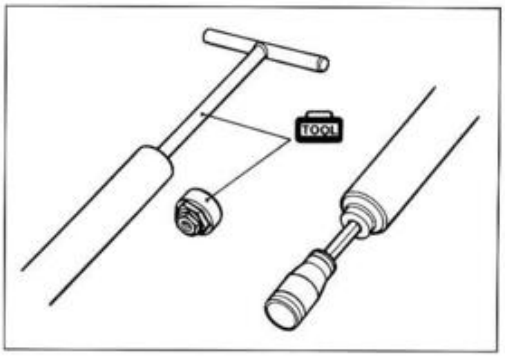

- Pour specified fork oil into the inner tube.

Fork oil type: Fork oil #10
99000-99044-10G: SUZUKI FORK OIL #10

Capacity (each leg): 563 ml (19.0/19.8 US/Imp oz)

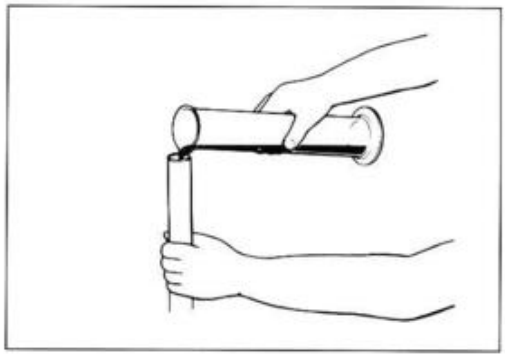

- Hold the front fork vertical and adjust the fork oil level with the special tool.

09943-74111: Fork oil level gauge

Oil level: 150 mm (5.9 in)

NOTE:
When adjusting the oil level, remove the fork spring and compress the inner tube fully.

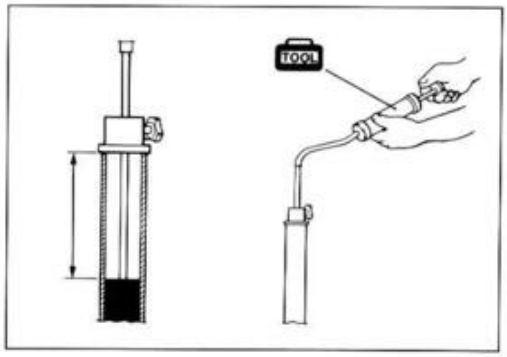

- Install the fork spring close pitch side up.
- Install the washer and fork cap bolt, and tighten the cap bolt your hand.

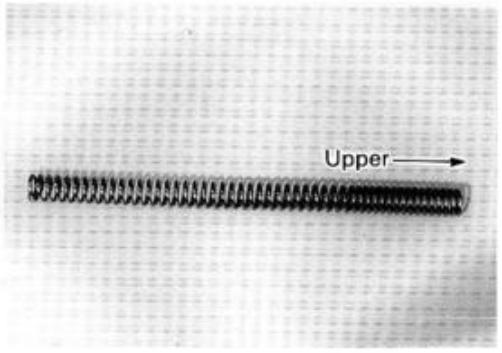

- When remounting the front fork, align the upper surface ① of the inner tube with the upper surface ② of the steering stem upper bracket.

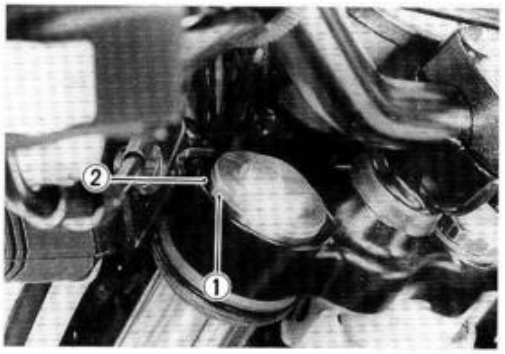

- Tighten the front fork lower clamp bolts and fork cap bolt to the specified torque.
- Tighten the front fork upper clamp bolt to the specified torque.

Front fork cap bolt: 23 N·m (2.3 kg-m, 16.5 lb-ft)
Upper clamp bolt : 29 N·m (2.9 kg-m, 21.0 lb-ft)
Lower clamp bolt : 26 N·m (2.6 kg-m, 19.0 lb-ft)

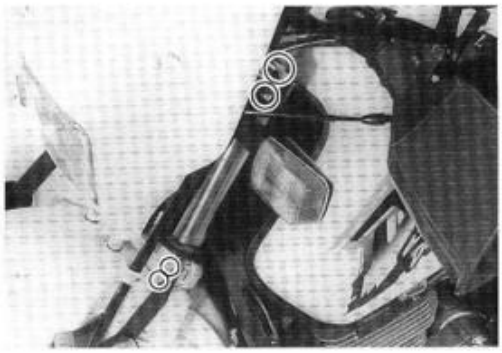

- Install the brake hose clamp and speedometer cable guide correctly.
- Tighten the front brake caliper mounting bolts to the specified torque.

Brake caliper mounting bolt: 26 N·m (2.6 kg-m, 19.0 lb-ft)

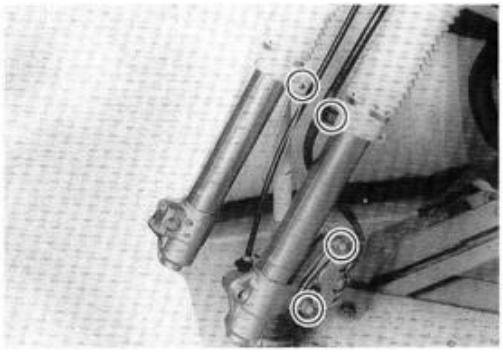

- Align the drive lugs ① with the recesses ② of the wheel hub.

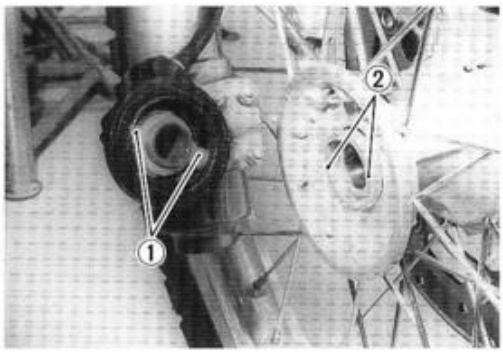

- Before tightening the front axle, position the stopper ③ of the speedometer gearbox against stopper ④.

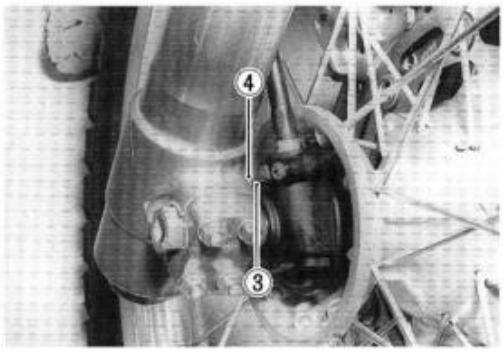

- Tighten the front axle to the specified torque and then move the front fork up and down.
- Tighten the upper axle holder nuts first and then lower nuts to the specified torque.

Front axle: 65 N·m (6.5 kg-m, 47.0 lb-ft)
Axle holder nut: 10 N·m (1.0 kg-m, 7.0 lb-ft)

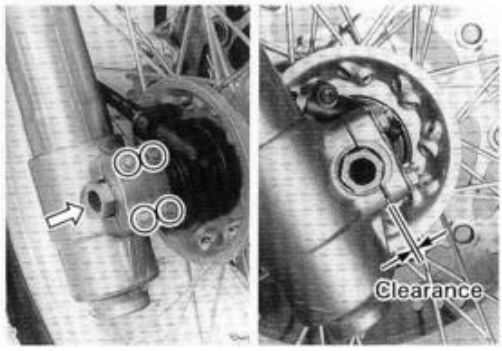

REAR SHOCK ABSORBER

① Rear shock absorber
② Plate (Optional part)
③ Plug (Optional part)
④ Spring seat

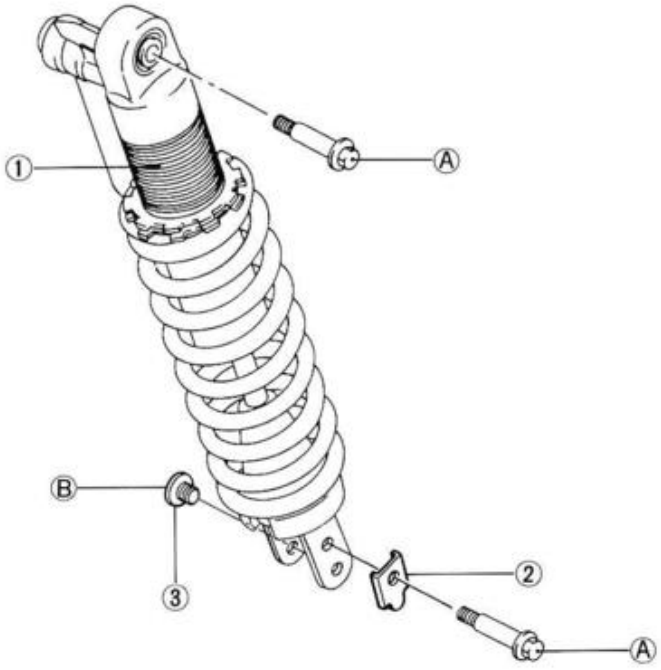

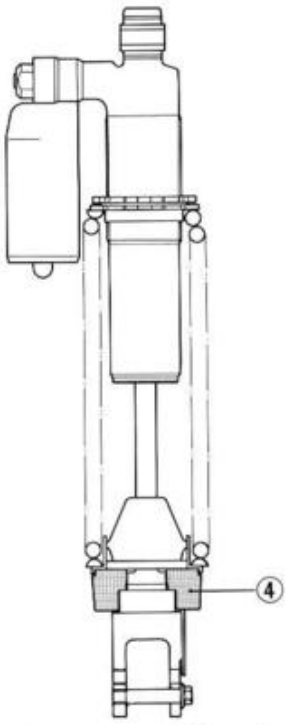

Standard spring seat ④ and mounting position

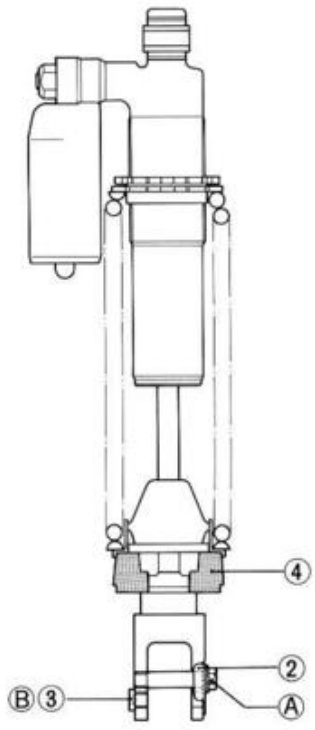

Changed spring seat ④ and mounting position.

ITEM	N·m	kg-m	lb-ft
Ⓐ	55	5.5	40.0
Ⓑ	30	3.0	21.5

REMOVAL AND DISASSEMBLY

- Remove the right and left frame covers.

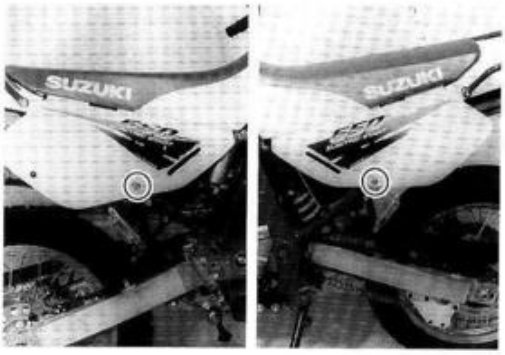

- Remove the seat by removing mounting bolts.

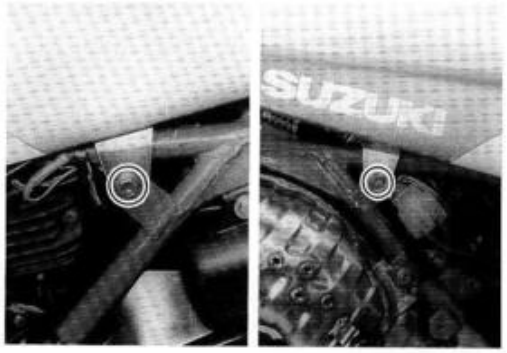

- Loosen the carburetor clamp screw ①.
- Disconnect the crankcase breather hose ②.
- Remove the air cleaner by removing mounting bolts ③.

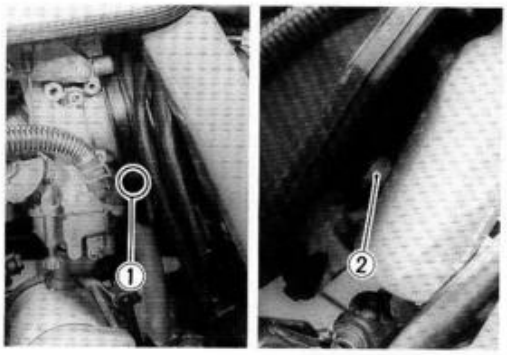

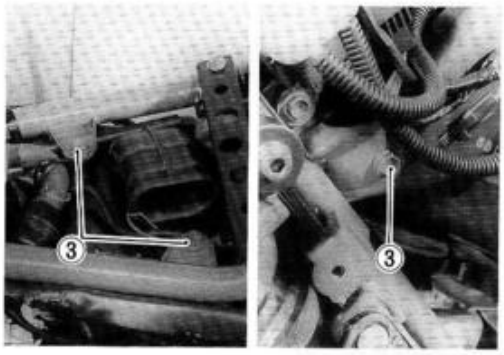

- Remove the rear shock absorber by removing mounting bolts (④, ⑤).

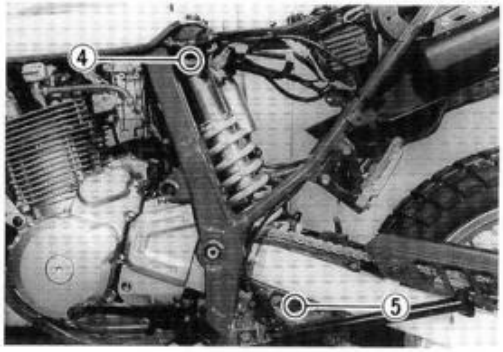

- Loosen the spring pre-load adjuster lock ring and adjuster ring fully with the special tool.

TOOL 09910-60611: Universal clamp wrench

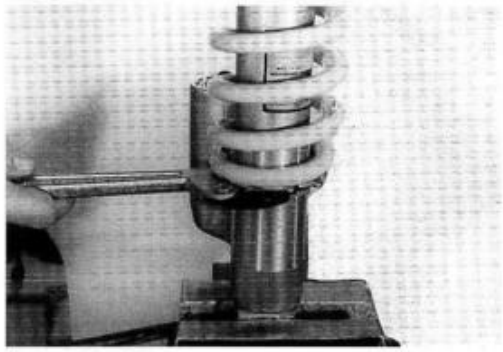

- Remove the spring seat ① and plate ② by moving the cushion ③ to the shock absorber cylinder side.

NOTE:
The removed plate ② will not be used when reassembling the shock absorber.

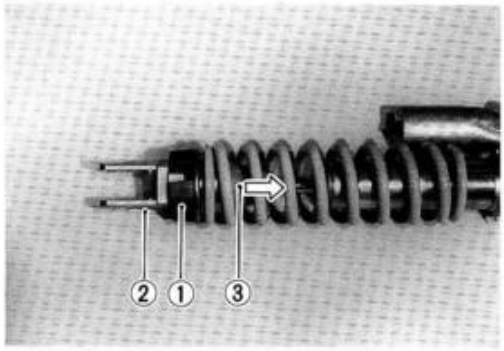

REASSEMBLY AND REMOUNTING

Reassemble and remount the rear shock absorber and air cleaner in the reverse order of removal and disassembly. Pay attention to the following points:

- When installing the spring seat ① to the shock absorber, invert it from standard position.

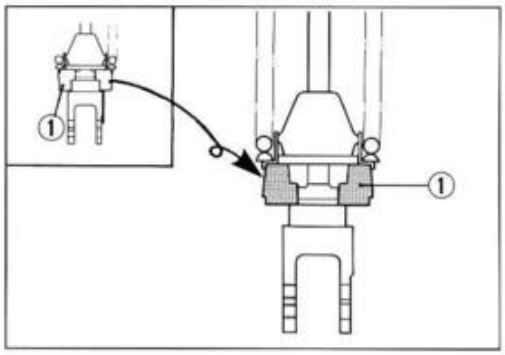

- Position the cushion ③ against washer ④.
- Tighten the spring adjuster ring and adjust the spring pre-load with the special tool. The standard set length is 247.5 mm.
- After adjusting the pre-load, tighten the adjuster lock ring securely.

TOOL 09910-60611: Universal clamp wrench

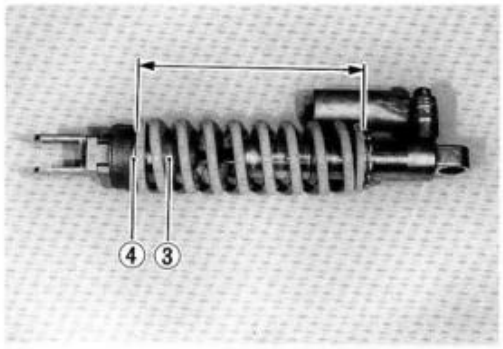

SPRING SETTING TABLE

	Spring pre-set length
Softest	253.5 mm (10.0 in)
Standard	**247.5 mm (9.7 in)**
Stiffest	238.5 mm (9.4 in)

- Tighten the plug ① (optional part) to the lower mounting part of shock absorber ② to the specified torque.

Plug: 30 N·m (3.0 kg-m, 21.5 lb-ft)

- Install the shock absorber lower plate ③ (optional part) as shown in the illustration.
- Install the rear shock absorber and tighten it to the specified torque.

Mounting bolt : 55 N·m (5.5 kg-m, 40.0 lb-ft) (Upper and lower)

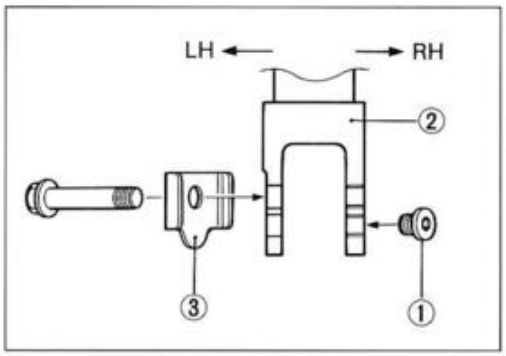

SIDE STAND

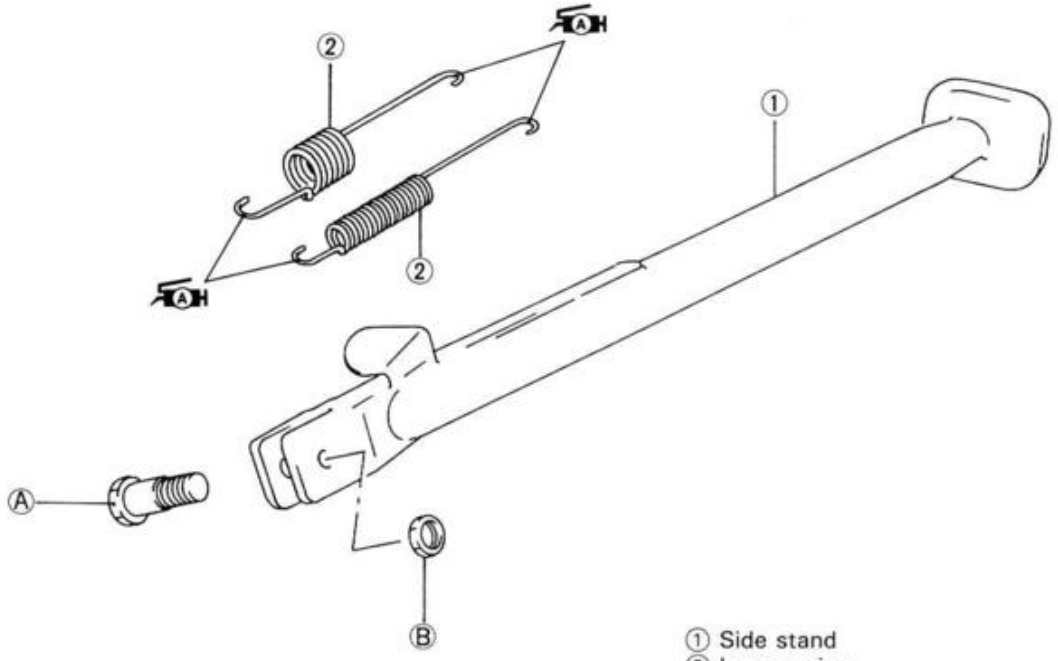

① Side stand
② Inner spring
③ Outer spring

ITEM	N·m	kg-m	lb-ft
Ⓐ	50	5.0	36.0
Ⓑ	55	5.5	40.0

SIDE STAND REMOVAL AND INSTALLATION

- Support the motorcycle with jack or wooden block.
- Remove the original side stand by removing mounting nut and bolt.

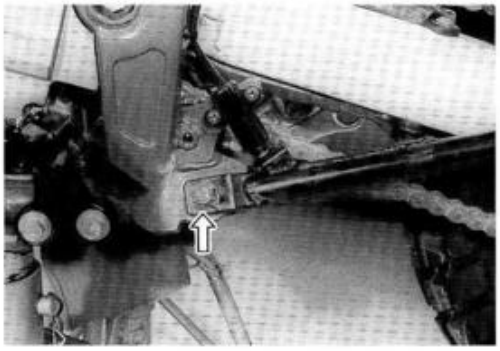

- Apply SUZUKI SUPER GREASE "A" to the side stand pivot portion and spring hooks.

99000-25030: SUZUKI SUPER GREASE "A"

- Install the optional shorter side stand (silver-colored) and springs correctly as shown in the illustration.

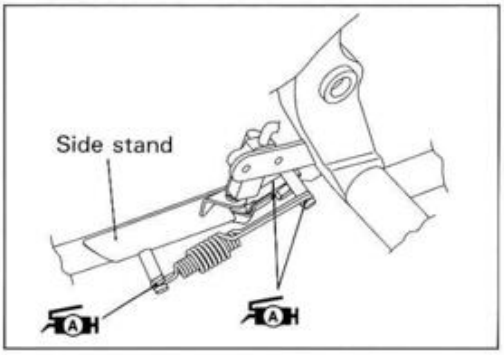

- Tighten the side stand mounting bolt and nut to the specified torque.

Bolt: 50 N·m (5.0 kg-m, 36.0 lb-ft)
Nut : 55 N·m (5.5 kg-m, 40.0 lb-ft)

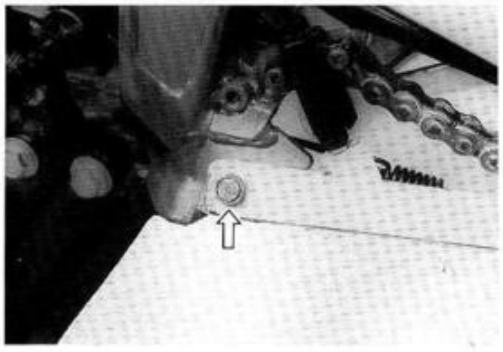

⚠ WARNING

A new, shorter, silver-colored optional side stand must be installed for safe parking.

NOTE:
Make sure that the side stand switch operation after installing the side stand.

WARNING LABEL

- Attach the warning label (optional part) to the swingarm as shown in the illustration.

NOTE:
Select the appropriate language label for your country.

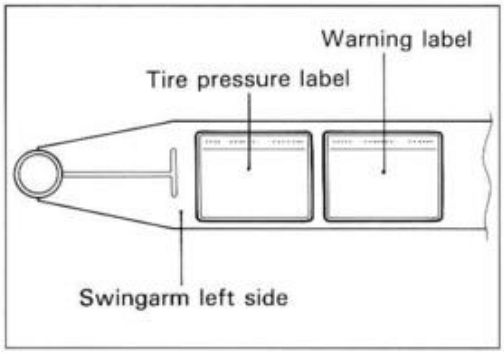

ELECTRICAL SYSTEM

CONTENTS

CAUTIONS IN SERVICING 6- 1
LOCATION OF ELECTRICAL COMPONENTS 6- 3
CHARGING SYSTEM 6- 4
  DESCRIPTION 6- 4
  TROUBLESHOOTING 6- 5
  INSPECTION 6- 6
STARTER SYSTEM AND SIDE-STAND/IGNITION INTERLOCK SYSTEM 6- 9
  STARTER SYSTEM DESCRIPTION 6- 9
  SIDE-STAND/IGNITION INTERLOCK SYSTEM DESCRIPTION 6- 9
  TROUBLESHOOTING 6-11
  STARTER MOTOR REMOVAL AND DISASSEMBLY 6-12
  STARTER MOTOR INSPECTION 6-12
  STARTER MOTOR REASSEMBLY 6-13
  STARTER RELAY INSPECTION 6-14
  SIDE-STAND/IGNITION INTERLOCK SYSTEM INSPECTION 6-15
IGNITION SYSTEM 6-17
  DESCRIPTION 6-17
  TROUBLESHOOTING 6-18
  INSPECTION 6-19
SPEEDOMETER AND PILOT INDICATOR 6-22
  REMOVAL AND DISASSEMBLY 6-22
  INSPECTION 6-22
LAMPS 6-24
  HEADLIGHT 6-24
  TAIL/BRAKE LIGHT, TURN SIGNAL LIGHT AND LICENSE PLATE LIGHT 6-25
  TURN SIGNAL RELAY 6-26
SWITCHES 6-26
BATTERY 6-27
  SPECIFICATIONS 6-27
  INITIAL CHARGING 6-27
  SERVICING 6-28
  RECHARGING OPERATION 6-29

CAUTIONS IN SERVICING

CONNECTOR

- When connecting a connector, be sure to push it in untill a click is felt.
- Inspect the connector for corrosion, contamination and breakage in its cover.

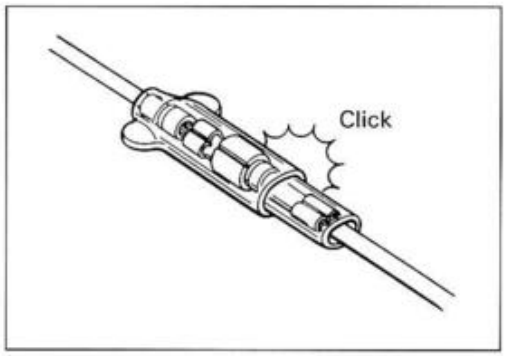

COUPLER

- With a lock type coupler, be sure to release the lock before disconnecting it and push it in fully till the lock works when connecting it.
- When disconnecting the coupler, be sure to hold the coupler itself and do not pull the lead wires.
- Inspect each terminal on the coupler for being loose or bent.
- Inspect each terminal for corrosion and contamination.

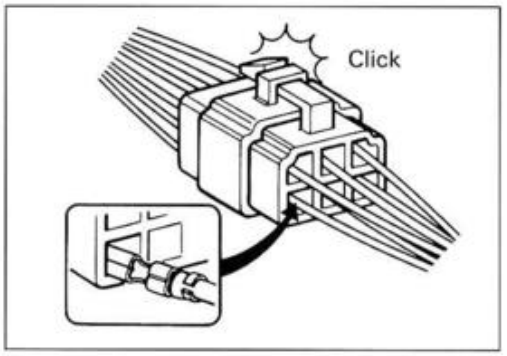

CLAMP

- Clamp the wire harness at such positions as indicated in "WIRE HARNESS ROUTING" (Refer to pages 7-12 and 13.).
- Bend the clamp properly so that the wire harness is clamped securely.
- In clamping the wire harness, use care not to allow it to hang down.
- Do not use wire or any other substitute for the band type clamp.

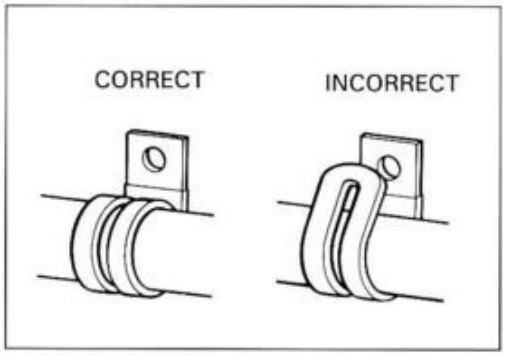

FUSE

- When a fuse blows, always investigate the cause, correct it and then replace the fuse.
- Do not use a fuse of a different capacity.
- Do not use wire or any other substitute for the fuse.

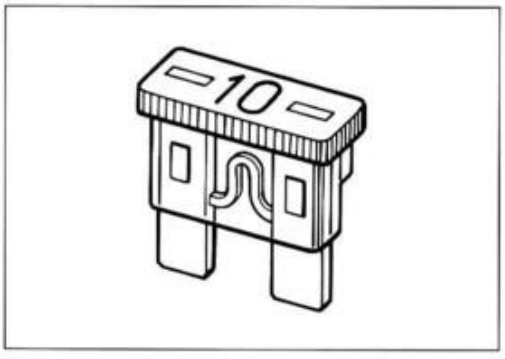

SEMI-CONDUCTOR EQUIPPED PART

- Be careful not to drop the part with a semi-conductor built in such as a CDI unit and regulator/rectifier.
- When inspecting these parts, follow inspection instruction strictly. Neglecting proper procedure may cause damage to these parts.

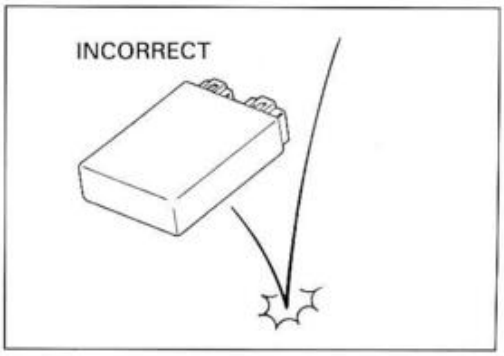

BATTERY

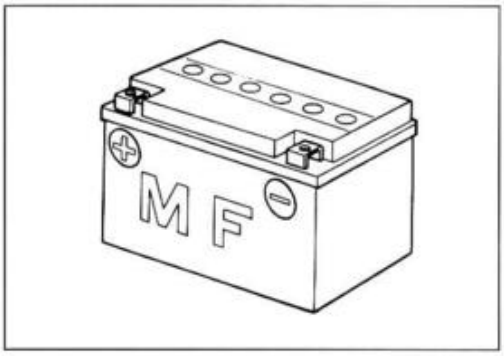

- The MF battery used in this vehicle does not require maintenance as inspection of electrolyte level and replenishment of water.
- No hydrogen gas is produced during normal charging of the battery, but such gas may be produced when it is overcharged. Therefore, do not bring fire near the battery while it is being charged.
- Note that the charging system for the MF battery is different from that of an ordinary battery. Do not replace with an ordinary battery.

CONNECTING BATTERY

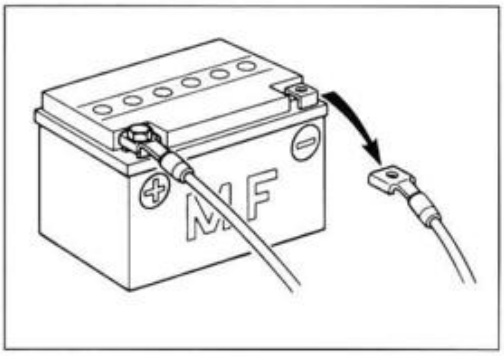

- When disconnecting terminals from the battery for disassembly or servicing, be sure to disconnect the negative (⊖) terminal first.
- When connecting terminals to the battery, be sure to connect the positive (⊕) terminal first.
- If the terminal is found corroded, remove the battery, pour warm water over it and clean with a wire brush.
- Upon completion of connection, apply grease lightly.
- Put a cover over the positive (⊕) terminal.

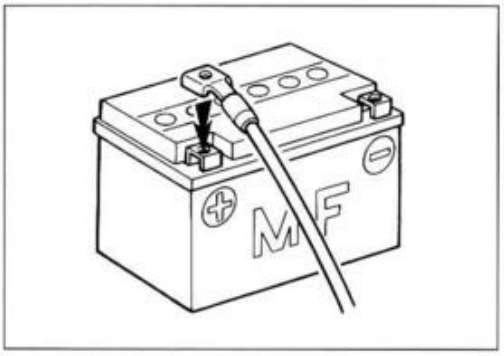

WIRING PROCEDURE

- Route the wire harness properly according to "WIRE HARNESS ROUTING" (Refer to pages 7-12 and 13.).

USING POCKET TESTER

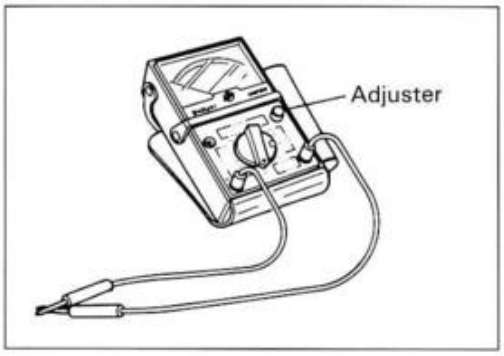

- Be sure to use positive (⊕) and negative (⊖) probes of the tester properly. Their false use may cause damage in the tester.
- If the voltage and current values are not known, start measuring in the higher range.
- Before measuring the resistance and after changing the resistance range, always perform 0 Ω adjustment.
- Taking a measurement where voltage is applied in the resistance range may cause damage in the tester. When measuring resistance, check to make sure that no voltage is applied there.
- After using the tester, turn the switch to the OFF position.

LOCATION OF ELECTRICAL COMPONENTS

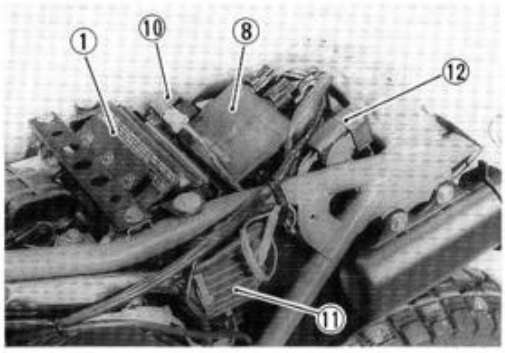

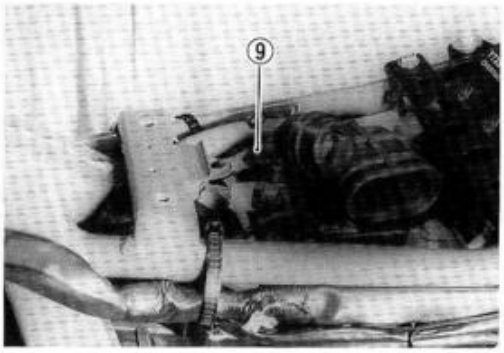

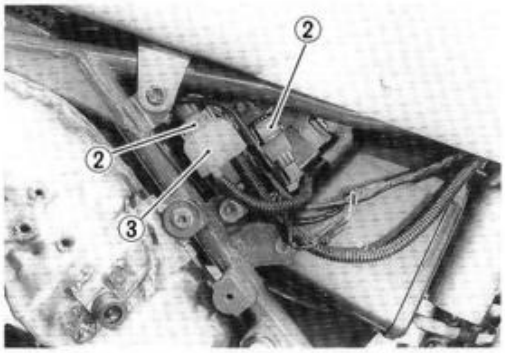

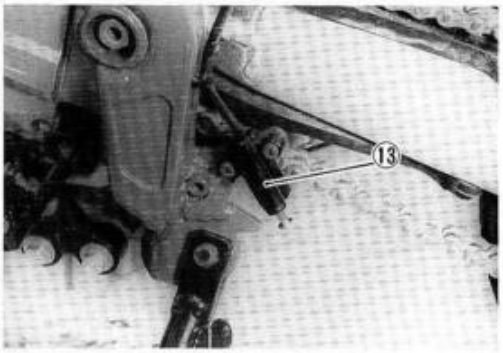

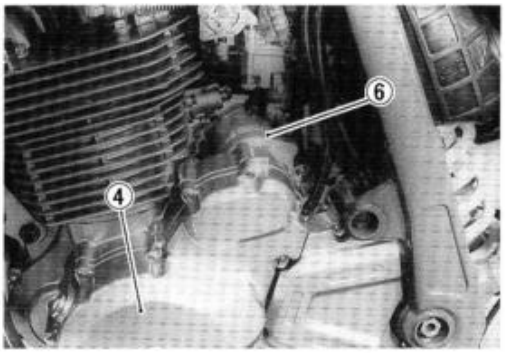

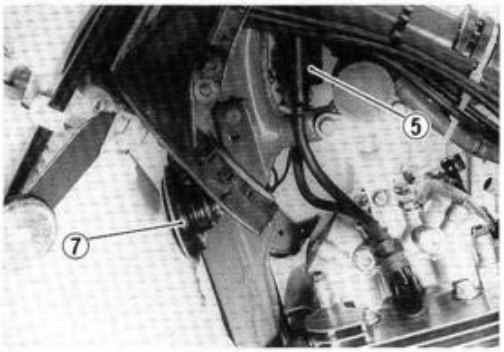

① Battery
② Fuse
③ Starter relay
④ Generator
⑤ Ignition coil
⑥ Starter motor
⑦ Horn
⑧ CDI unit
⑨ Diode
⑩ Turn signal relay
⑪ Regulator/rectifier
⑫ Side-stand/ignition interlock relay
⑬ Side-stand switch

CHARGING SYSTEM

DESCRIPTION

The circuit of the charging system is indicated in the figure, which is composed of an AC generator, regulator/rectifier unit and battery.

The AC current generated from AC generator is converted by rectifier and is turned into DC current, then it charges the battery.

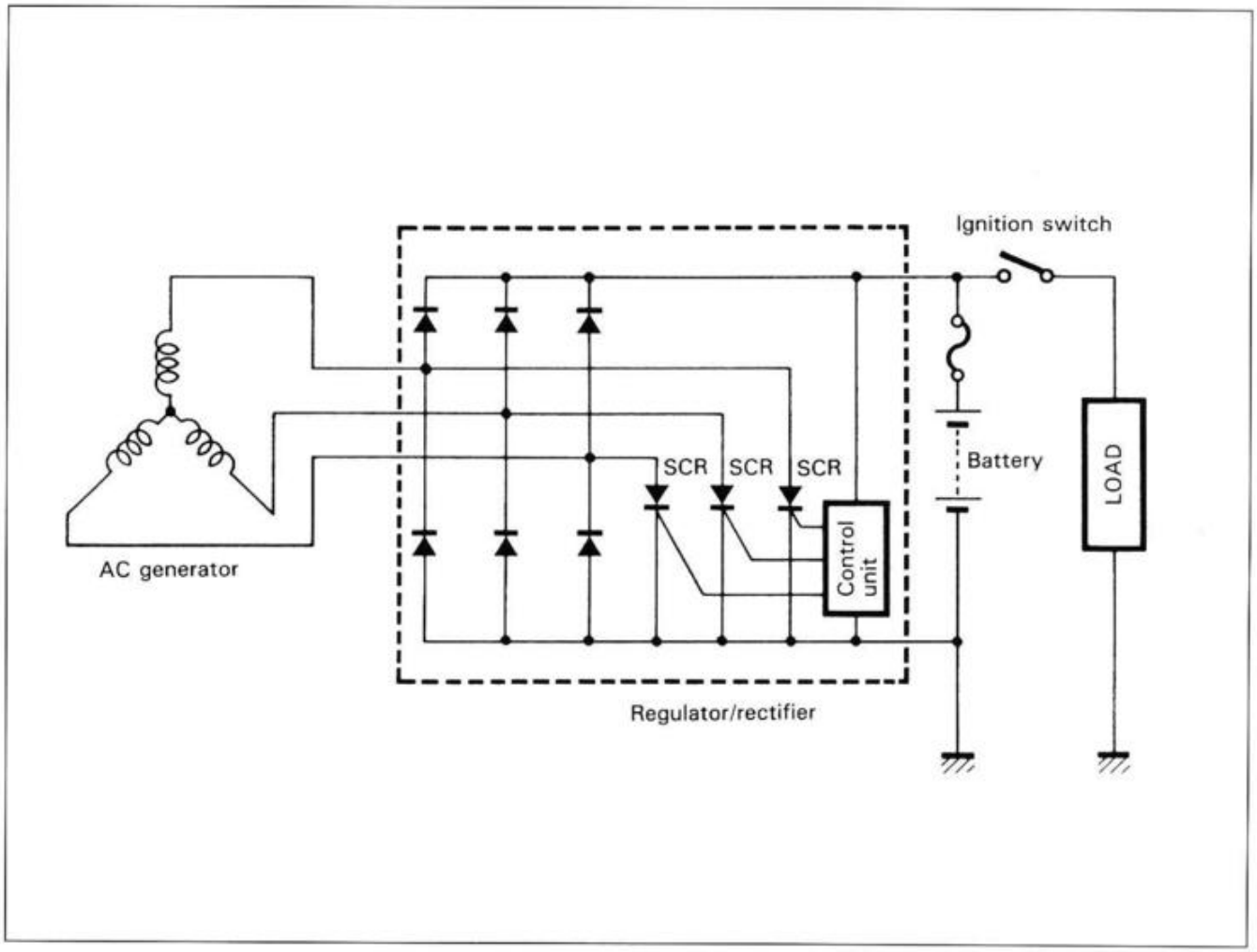

TROUBLESHOOTING

Battery runs down quickly.

- Check accessories which excessively waste electric power.
  - Installed → • Remove accessories.
  - Not installed ↓
- Inspect battery leak current. (Refer to page 6-6.)
  - Leak → • Short circuit of wire harness. • Loose or disconnected wires. • Faulty battery.
  - No leak ↓
- Inspect charging voltage between battery terminals. (Refer to page 6-6.)
  - Correct → • Faulty battery. • Abnormal driving condition.
  - Incorrect ↓
- Inspect continuity generator coils. (Refer to page 6-7.)
  - No continuity → • Faulty generator coils or disconnected lead wires.
  - Correct ↓
- Inspect generator no-load voltage. (Refer to page 6-7.)
  - Incorrect → • Faulty generator rotor.
  - Correct ↓
- Inspect regulator/rectifier. (Refer to page 6-8.)
  - Incorrect → • Faulty regulator/rectifier.
  - Correct ↓
- Inspect wirings.
  - Incorrect → • Short circuit of wire harness. • Poor contact of couplers.
  - Correct ↓
- • Faulty battery.

Others

Battery overcharge	• Faulty regulator/rectifier • Faulty battery • Poor contact of generator lead wire coupler

INSPECTION

BATTERY LEAK CURRENT INSPECTION

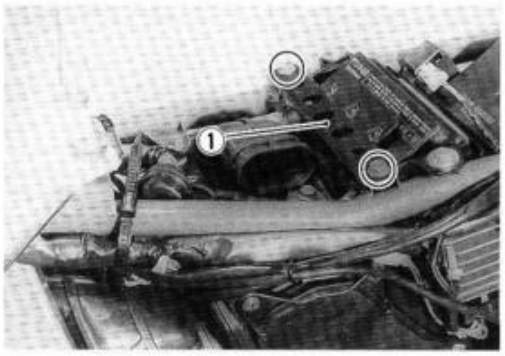

- Remove the frame covers and seat.
- Remove the battery holder plate ① .
- Turn the ignition switch to the OFF position.
- Disconnect the battery ⊖ lead wire.

Note that leakage is indicated if the needle swings even a little when the milliampare meter of the pocket tester is connected between a ⊖ terminal and the lead wire of the battery as shown.

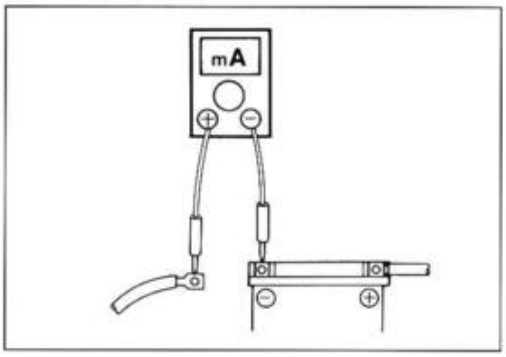

09900-25002: Pocket tester

⚠ CAUTION

- **Because the leak current might be large, turn the tester to high range first when connecting an ammeter.**
- **Do not turn the ignition switch to the ON position when measuring current.**

When leakage is found, look for the part where the needle does not swing through the couplers and connectors are removed one by one.

CHARGING OUTPUT INSPECTION

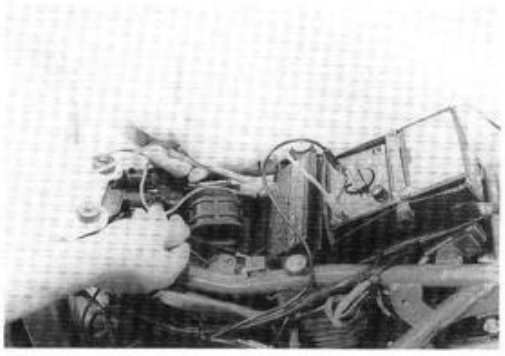

- Remove the frame covers and seat.
- Remove the battery holder plate.
- Start the engine and keep it running at 5 000 r/min. with lighting switch turned ON and dimmer switch turned HI position.

Measure the DC voltage between the battery terminals ⊕ and ⊖ with a pocket tester. If the tester reads under the specified value, inspect the generator coil and regulator/rectifier.

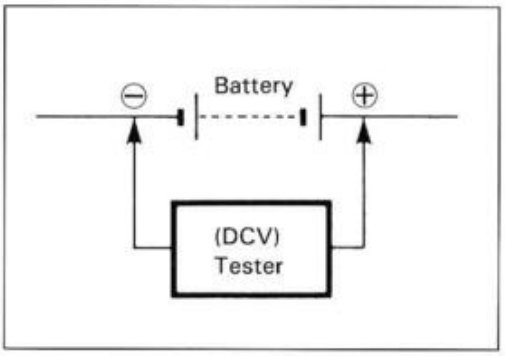

⚠ CAUTION

If the pocket tester is set to read current or resistance and a voltage is applied across the test probes, damage will result. Therefore, it is important that the tester knob on the pocket tester be set the proper position before making any measurements.

NOTE:
When making this test, be sure that the battery is fully-charged condition.

09900-25002: Pocket tester

Tester knob indication: DC 25V

Charging output
Standard: 13.0—16.0 at 5 000 r/min.

GENERATOR COIL CONTINUITY INSPECTION

- Remove the frame covers and seat.
- Disconnect the generator lead wire coupler ①.

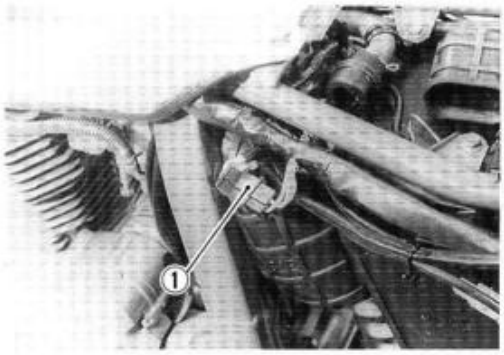

Using a pocket tester, inspect the continuity between the three lead wires.
If there is no continuity, replace the generator coil with a new one.

09900-25002: Pocket tester

Tester knob indication: X 1Ω range

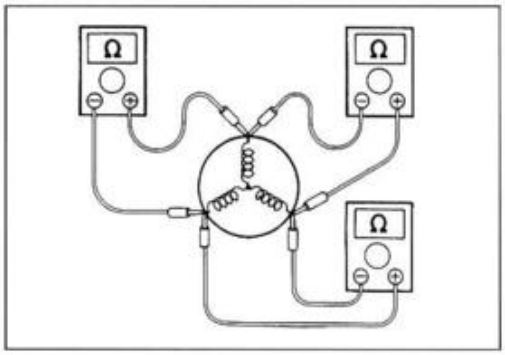

GENERATOR NO-LOAD PERFORMANCE INSPECTION

- Remove the frame covers and seat.
- Disconnect the generator lead wire coupler ① .
- Start the engine and keep it running at 5 000 r/min.

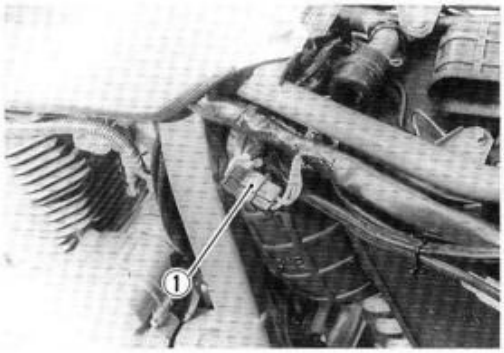

Using a pocket tester, measure the voltage between the three lead wires.
If the tester reads under the specified value, replace the generator coil with a new one.

09900-25002: Pocket tester

Tester knob indication: AC250V

Generator no-load performance:
More than 75V/5 000 r/min
(When engine is cold)

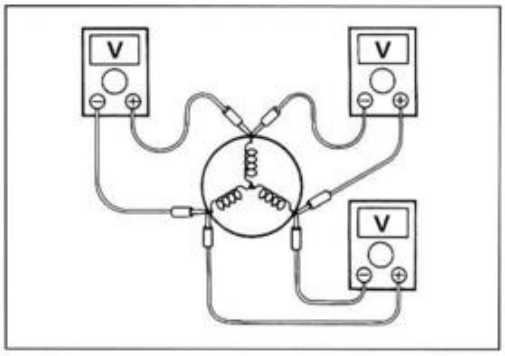

REGULATOR/RECTIFIER INSPECTION

- Remove the right frame cover.
- Disconnect the regulator/rectifier coupler ①.

Using a pocket tester (x 1kΩ range), measure the resistance between the terminals in the following table.
If resistance is incorrect, replace the regulator/rectifier.

09900-25002: Pocket tester

Tester knob indication: X 1kΩ range

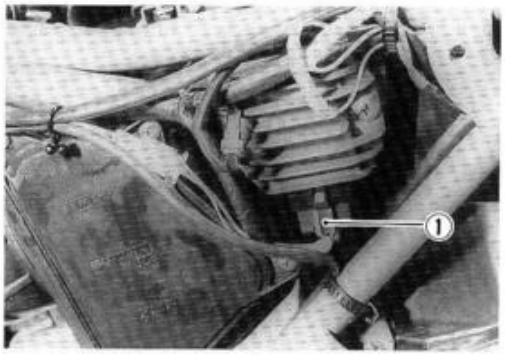

Unit: kΩ

① Probe of tester to:	⊕ Probe of tester to:					
		⊕	⊖	Y_1	Y_2	Y_3
⊕			∞	∞	∞	∞
⊖		1—20		1—10	1—10	1—10
Y_1		1—10	∞		∞	∞
Y_2		1—10	∞	∞		∞
Y_3		1—10	∞	∞	∞	

∞: Infinity

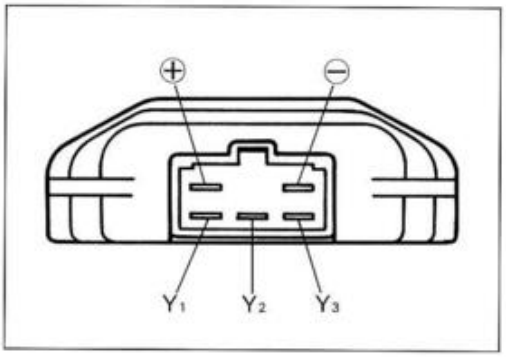

NOTE:
As diodes, thyristors are used inside this regulator/rectifier, the resistance values will differ when an ohmmeter other than the SUZUKI pocket tester is used.

STARTER SYSTEM AND SIDE-STAND/IGNITION INTERLOCK SYSTEM

STARTER SYSTEM DESCRIPTION

The starter system is shown in the diagram below: namely, the starter motor, starter relay, side-stand relay, side-stand switch, neutral switch, clutch lever position switch, starter switch, engine stop switch, IG switch and battery.

Depressing the starter switch (on the right handlebars switch box) energizes the relay, causing the contact points to close which connects the starter motor to the battery. The motor draws about 70 amperes to start the engine.

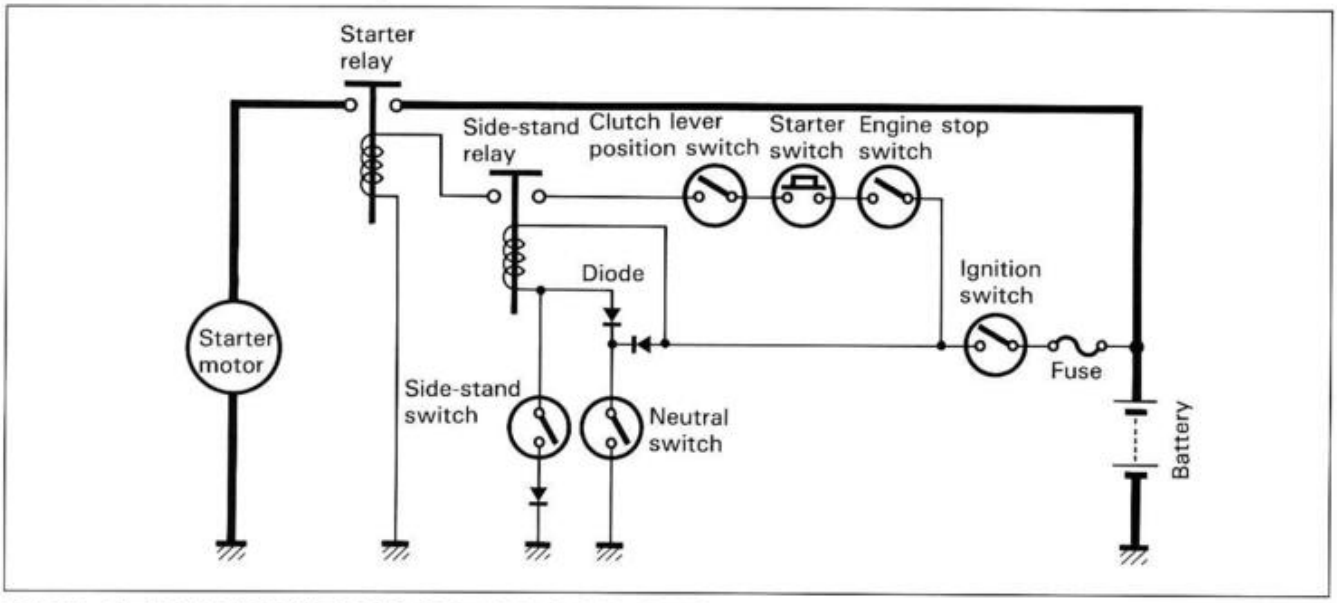

SIDE-STAND/IGNITION INTERLOCK SYSTEM DESCRIPTION

This side-stand/ignition interlock system is to prevent starting the motorcycle with the side-stand left down. The system is operated by an electric circuit provided between the battery and ignition coil.

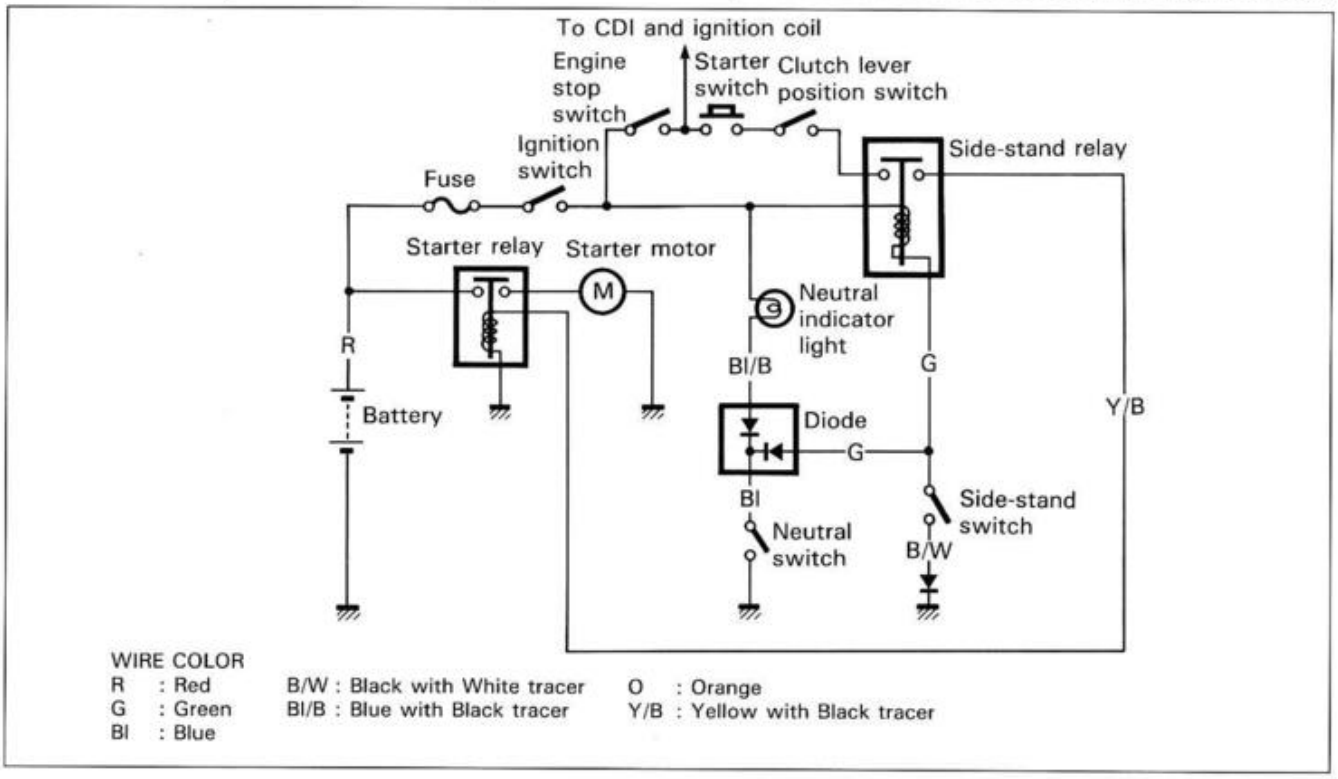

The circuit consists of relay, lamp, diode and switches and decides to live the ignition coil depending on the position of the TRANSMISSION and SIDE-STAND with the neutral and side-stand switches working mutually.

The ignition coil lives only in two situations as follows.

1. Transmission: "NEUTRAL (ON)" Side-stand: "DOWN (OFF)"
   The current flow Ⓐ turns "ON" the relay and the ignition coil lives even the side-stand is kept down. This is or warming up the engine.

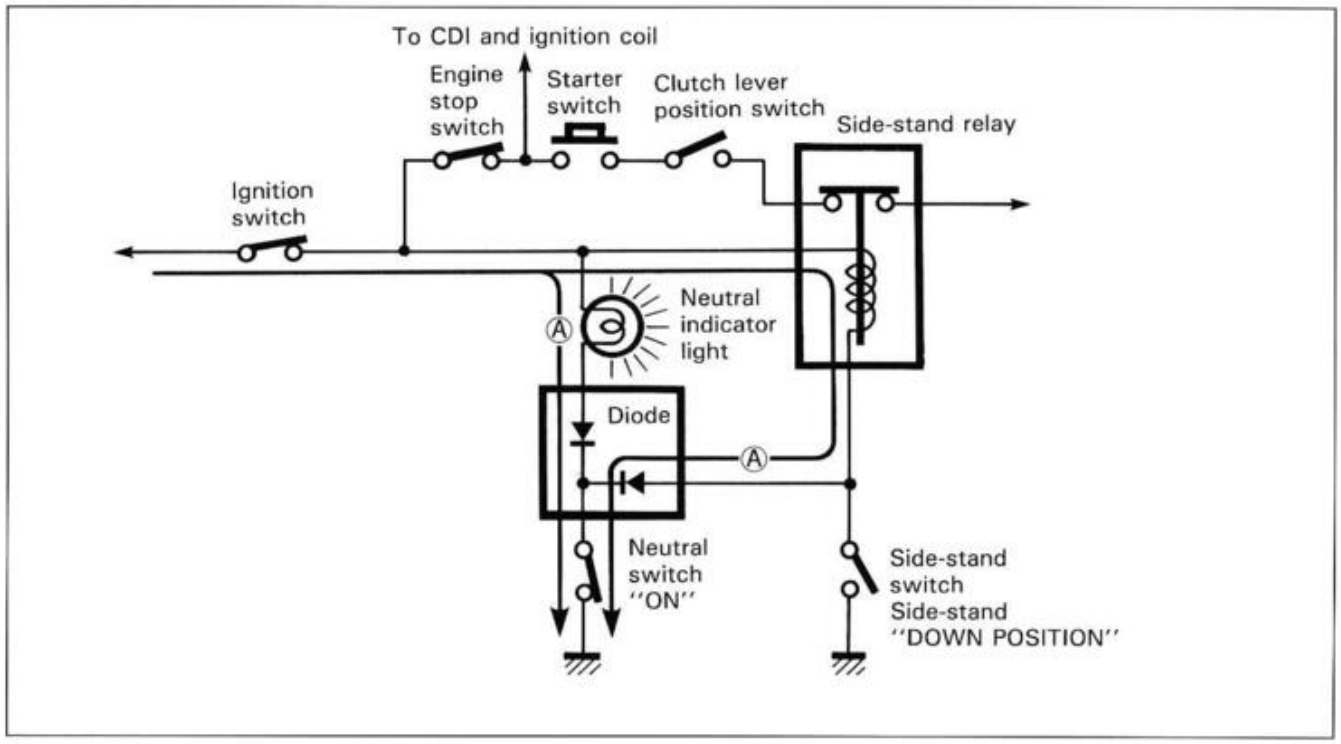

2. Side-stand: "UP-RIGHT (ON)"
   The current flow Ⓑ turns "ON" the relay and the ignition coil lives. The engine can be easily started at any transmission position.

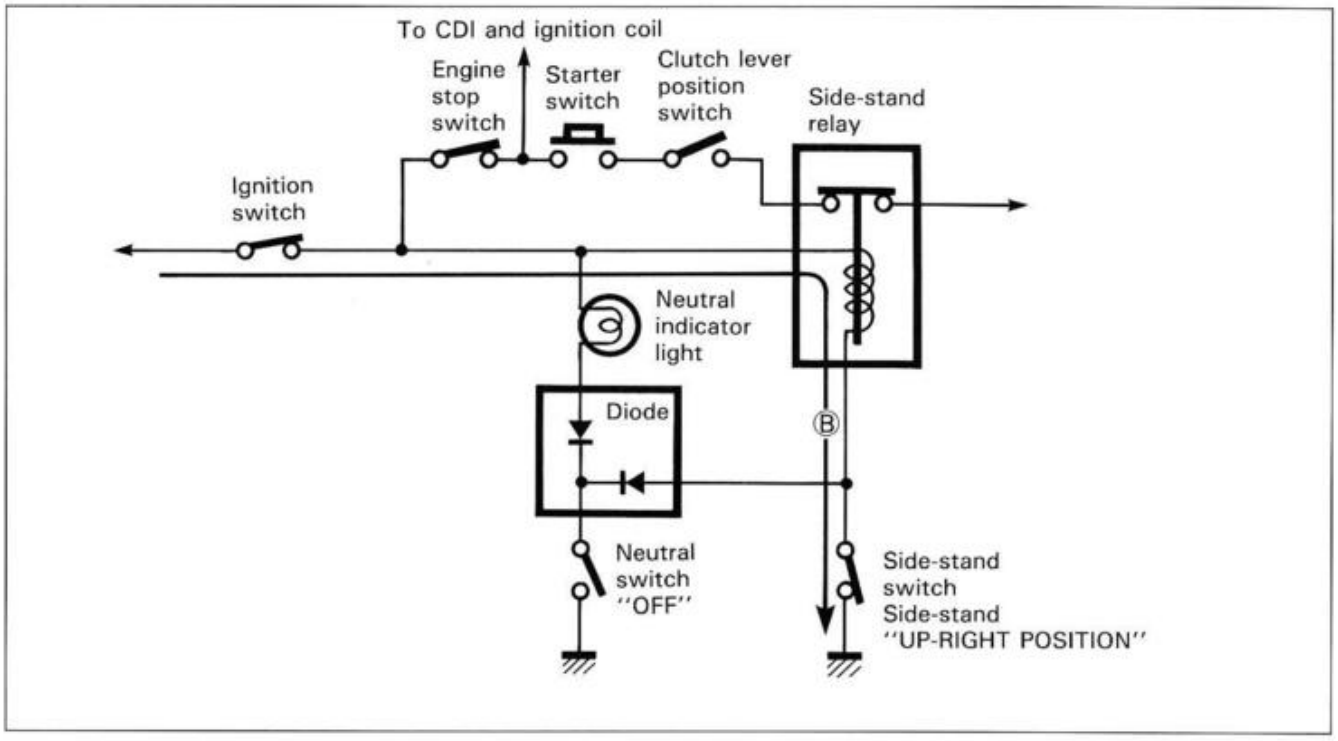

TROUBLESHOOTING

Starter motor will not run.

The transmission is in neutral. Turn on the ignition switch with the engine stop switch in "RUN" position.
Check whether to hear the click noise from the starter relay when the starter button is pushed.

- Clicks → Check whether to run the starter motor when connect the starter motor terminal to the battery ⊕ terminal directly. (Do not use thin wire, because a large amount of current flows.)
  - Run → • Faulty starter relay • Loosen or disconnected starter motor lead wire
  - Not run → • Faulty starter motor
- No click → Measure the starter relay voltage at the starter relay connectors (between Y/G ⊕ and B/W ⊖) when the starter button is pushed.
  - Not voltage → • Faulty ignition switch • Faulty engine stop switch • Faulty neutral switch • Faulty diode • Faulty side-stand relay • Faulty starter button • Faulty clutch lever position switch • Poor contact of connector • Open circuit in wiring harness
  - Voltage measured → Check the starter relay. (Refer to page 6-14.)
    - Incorrect → • Faulty starter relay
    - Correct → • Poor contact of the starter relay

Starter motor runs when the transmission is in neutral, but does not run with the transmission in any position except neutral, with the side-stand up position.

Check the side-stand switch. (Refer to page 6-16.)

- Incorrect → • Faulty side-stand switch
- Correct → • Open circuit in wiring harness • Poor contact of connector

Others

Engine does not turn though starter motor runs.	• Faulty starter clutch

STARTER MOTOR REMOVAL AND DISASSEMBLY

- Remove the exhaust pipe.
- Remove the cam drive chain tensioner.
- Disconnect the starter motor lead wire and remove the starter motor by removing the mounting bolts. (Refer to page 3-11.)

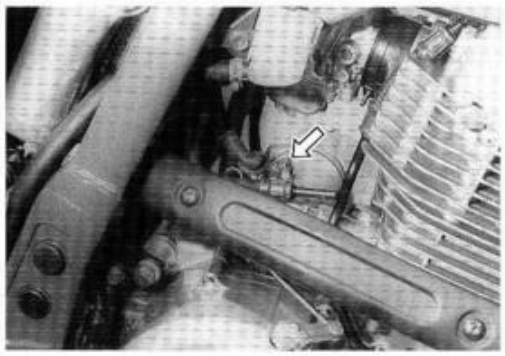

- Disassemble the starter motor as shown in the illustration.

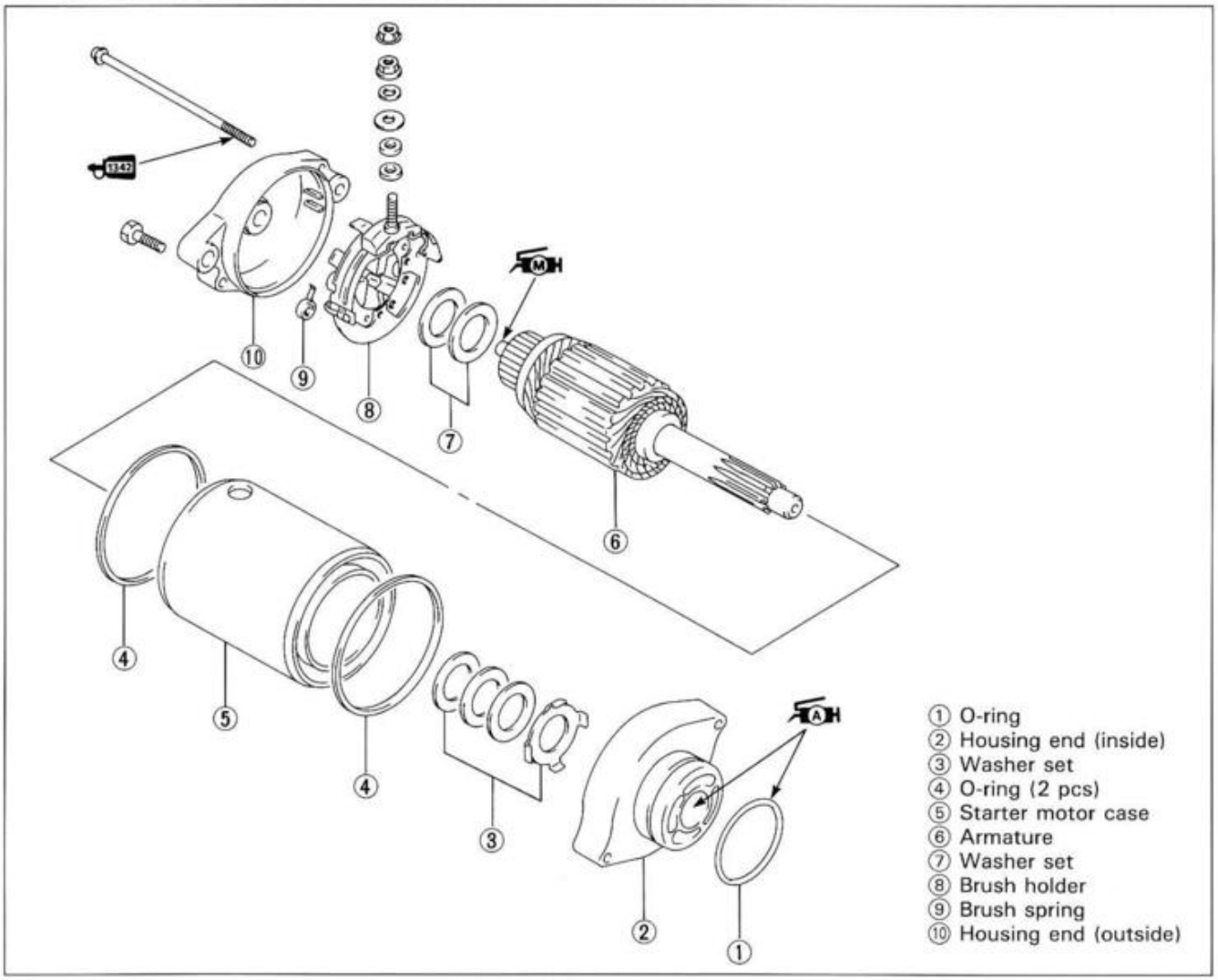

STARTER MOTOR INSPECTION

CARBON BRUSH

Inspect the brushed for abnormal wear, crack or smoothness in the brush holder.
If the brush has failed, replace the brush sub assy.

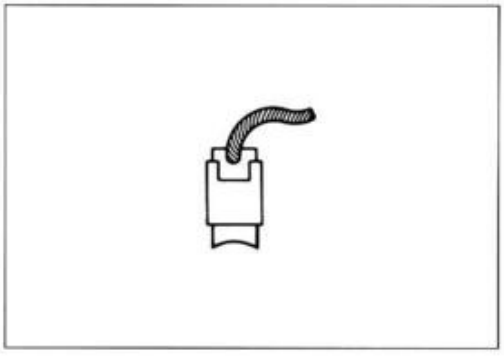

COMMUTATOR

Inspect the commutator for discoloration, abnormal wear or undercut Ⓐ.
If the commutator is abnormally worn, replace the armature.
When surface is descolored, polish it with #400 sand paper and clean it with dry cloth.
If there is no undercut, scrape out the insulator ① with saw blade.

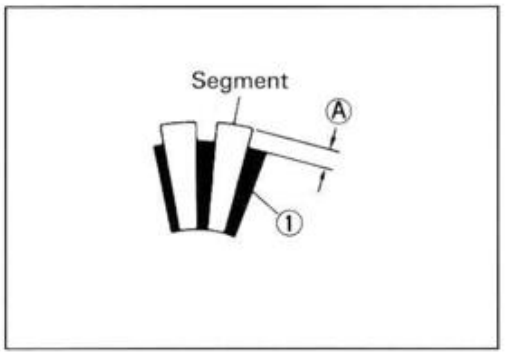

ARMATURE COIL INSPECTION

Check for continuity between each segment.
Check for continuity between each segment and the armature shaft.
If there is no continuity between the segments or there is continuity between the segments and shaft, replace the armature with a new one.

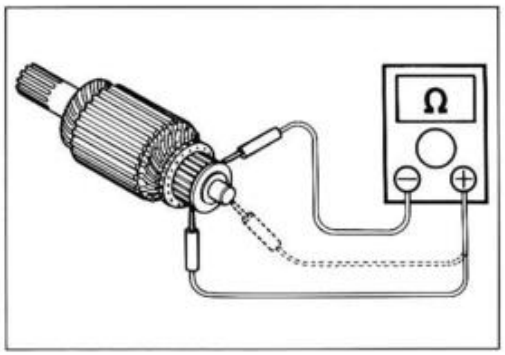

OIL SEAL INSPECTION

Check the seal lip for damage or leakage.
If any damage is found, replace the bracket.

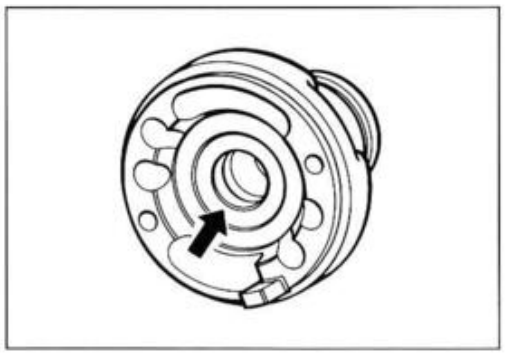

STARTER MOTOR REASSEMBLY

Reassemble the starter motor in the reverse order of disassembly. Pay attention to the following points:

⚠ CAUTION

Replace the O-rings with new ones to prevent oil leakage and moisture.

- Apply SUZUKI SUPER GREASE "A" to the lip of the oil seal.

99000-25030: SUZUKI SUPER GREASE "A"

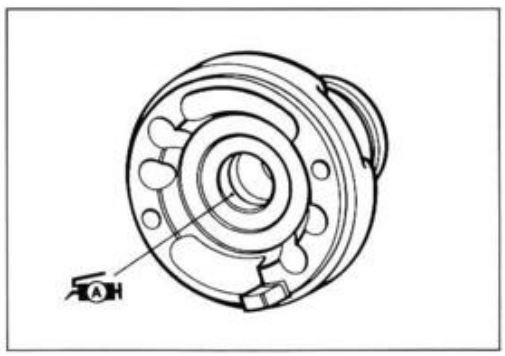

- Apply a small quantity of MOLY PASTE to the armature shaft.

99000-25140: SUZUKI MOLY PASTE

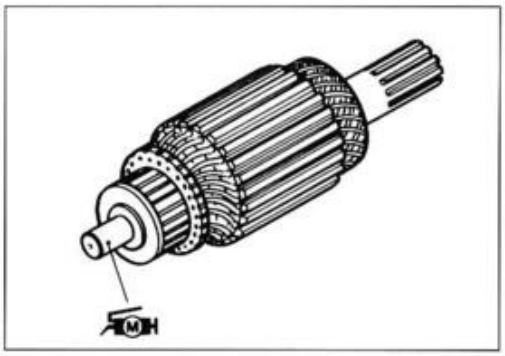

- Apply a small quantity of THREAD LOCK "1342" to the starter motor housing bolts.

99000-32050: THREAD LOCK "1342"

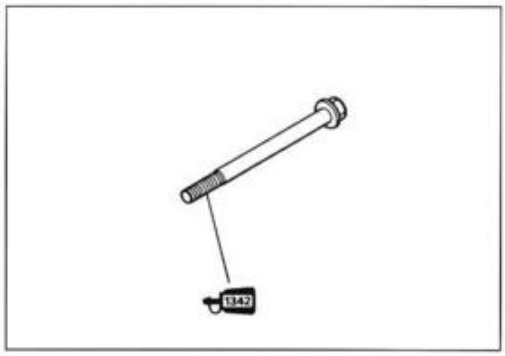

STARTER RELAY INSPECTION

- Remove the right frame cover.
- Remove the starter relay cover.
- Disconnect the starter motor lead wire and battery lead wire at the starter relay.
- Disconnect the lead wire coupler from the starter relay.

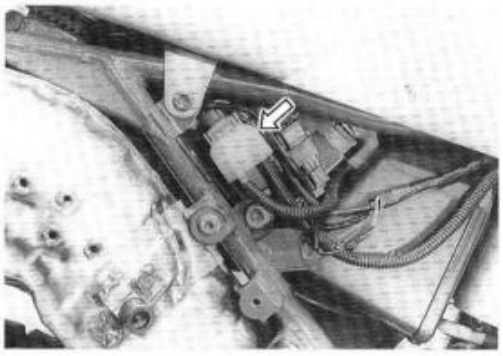

Apply 12 volts to ① and ② terminals, inspect the continuity between the terminals, positive and negative.
If the starter relay is in sound condition, continuity is found.

09900-25002: Pocket tester

Tester knob indication: X 1Ω range

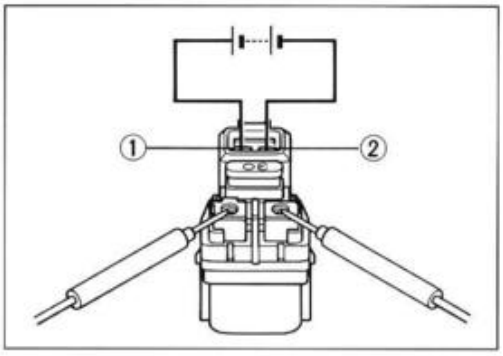

⚠ CAUTION

Do not apply a battery voltage more than 5 seconds to the starter relay as it may overheat and cause damage to the relay coil.

Check the coil for "open", "ground" and ohmic resistance.
The coil is in good condition if the resistance is as follows.

09900-25002: Pocket tester

Tester knob indication: X 1Ω range

Starter relay resistance
Standard: 3—5Ω

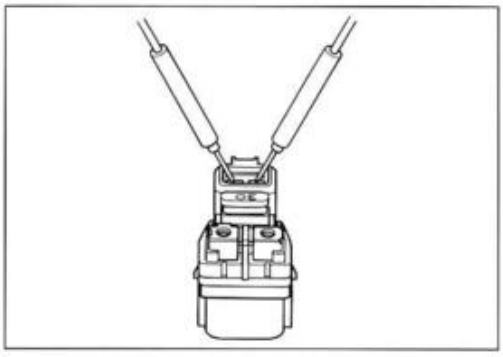

STARTER RELAY CIRCUIT DIAGRAM

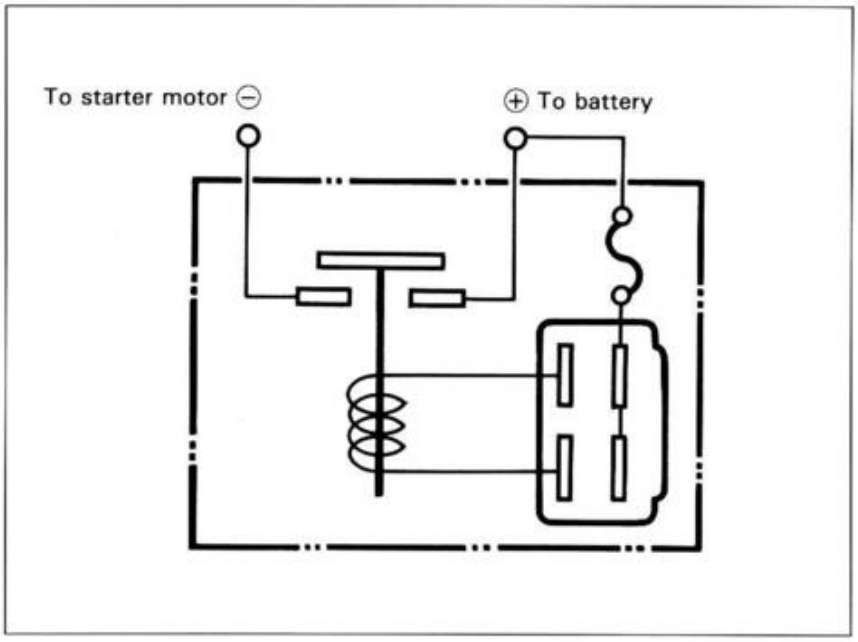

SIDE-STAND/IGNITION INTERLOCK SYSTEM INSPECTION

If the interlock system does not operate properly, check each component. If any abnormality is found, replace the component with a new one.

TOOL **09900-25002: Pocket tester**

DIODE

The diode is located under the seat.
The diode can pass current only in one direction.
Check the continuity between ① and ② . If one way continuity the diode is in good condition.
Also check the continuity between ② and ③ as required.

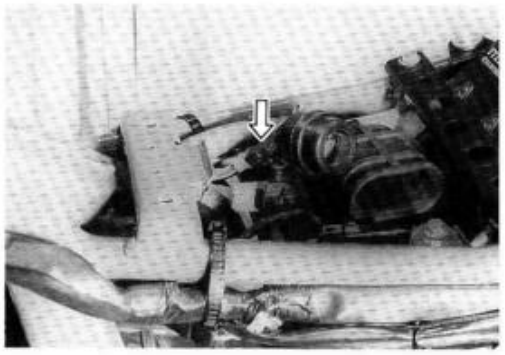

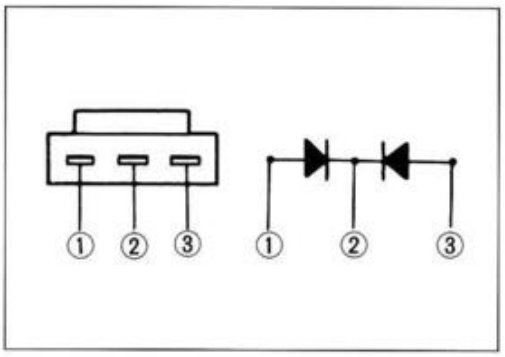

NEUTRAL SWITCH

The neutral lead wire coupler is located behind the left frame cover.

- Remove the frame covers and seat.
- Disconnect the neutral switch lead and check the continuity between Blue and Ground with the transmission in "NEUTRAL".

SIDE-STAND SWITCH

	Green (⊖ Proboe)	Black/White (⊕ Proboe)
ON (UP-right position)	○———	———○
OFF (Down position)		

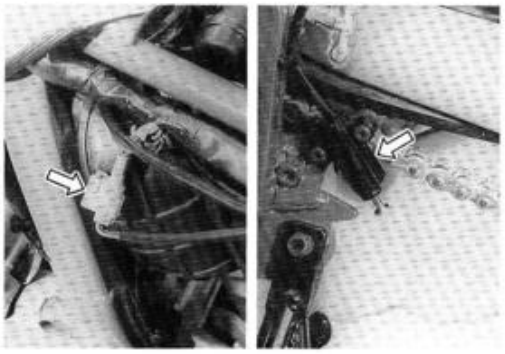

SIDE-STAND/IGNITION INTERLOCK RELAY

The side-stand/ignition interlock relay is located under the seat.

- Remove the frame covers and seat.

First, check the insulation between ① and ② terminals with pocket tester. Then apply 12 volts to ③ and ④ terminals, ⊕ to ③ and ⊖ to ④ , and check the continuity between ① and ② .
If there is no continuity, replace it with a new one.

TOOL 09900-25002: Pocket tester

Tester knob indication: X 1Ω range

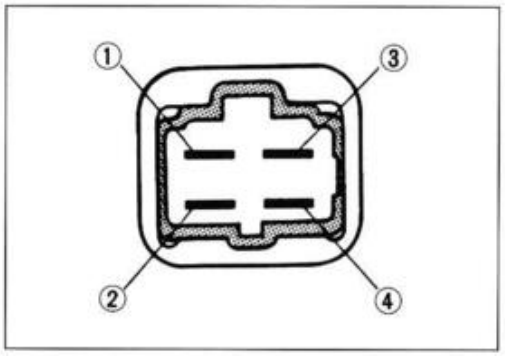

CLUTCH LEVER POSITION SWITCH

	Yellow/Green	Yellow/Green
ON (Squeeze)	○———	———○
OFF		

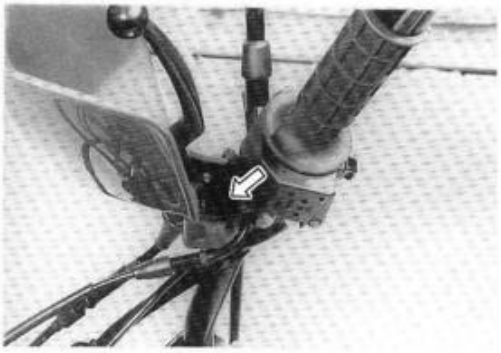

IGNITION SYSTEM

DESCRIPTION

In the capacitor discharged ignition system, the electrical energy generated by the magneto charges the capacitor. This energy is released in a single surge at the specified ignition timing point, and current flows through the primary side of the ignition coil. A high voltage current is induced in the secondary windings of the ignition coil resulting in strong spark between the spark plug gap.

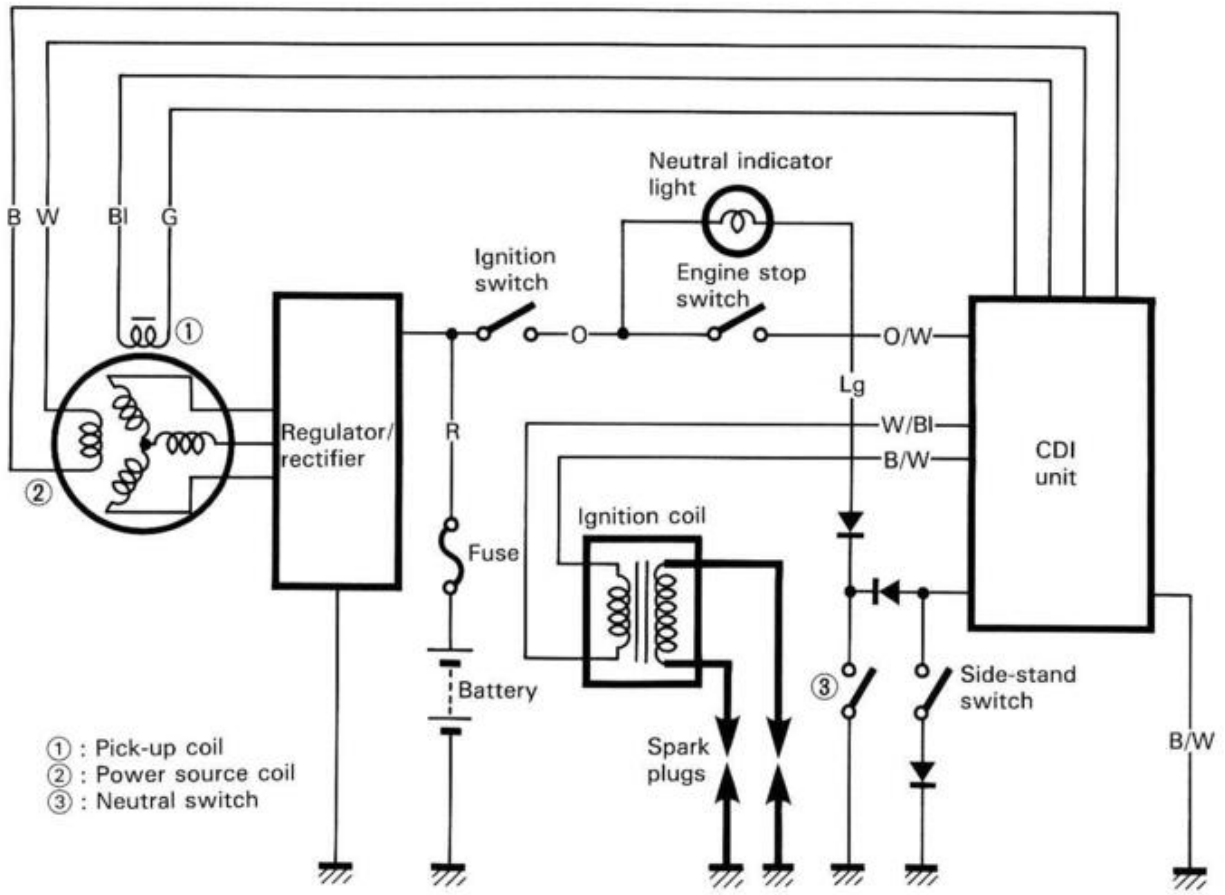

WIRE COLOR

B	: Black	O	: Orange
W	: White	R	: Red
G	: Green	Lg	: Light green
Bl	: Blue	O/W	: Orange with White tracer
		B/W	: Black with White tracer
		W/Bl	: White with Blue tracer

TROUBLESHOOTING

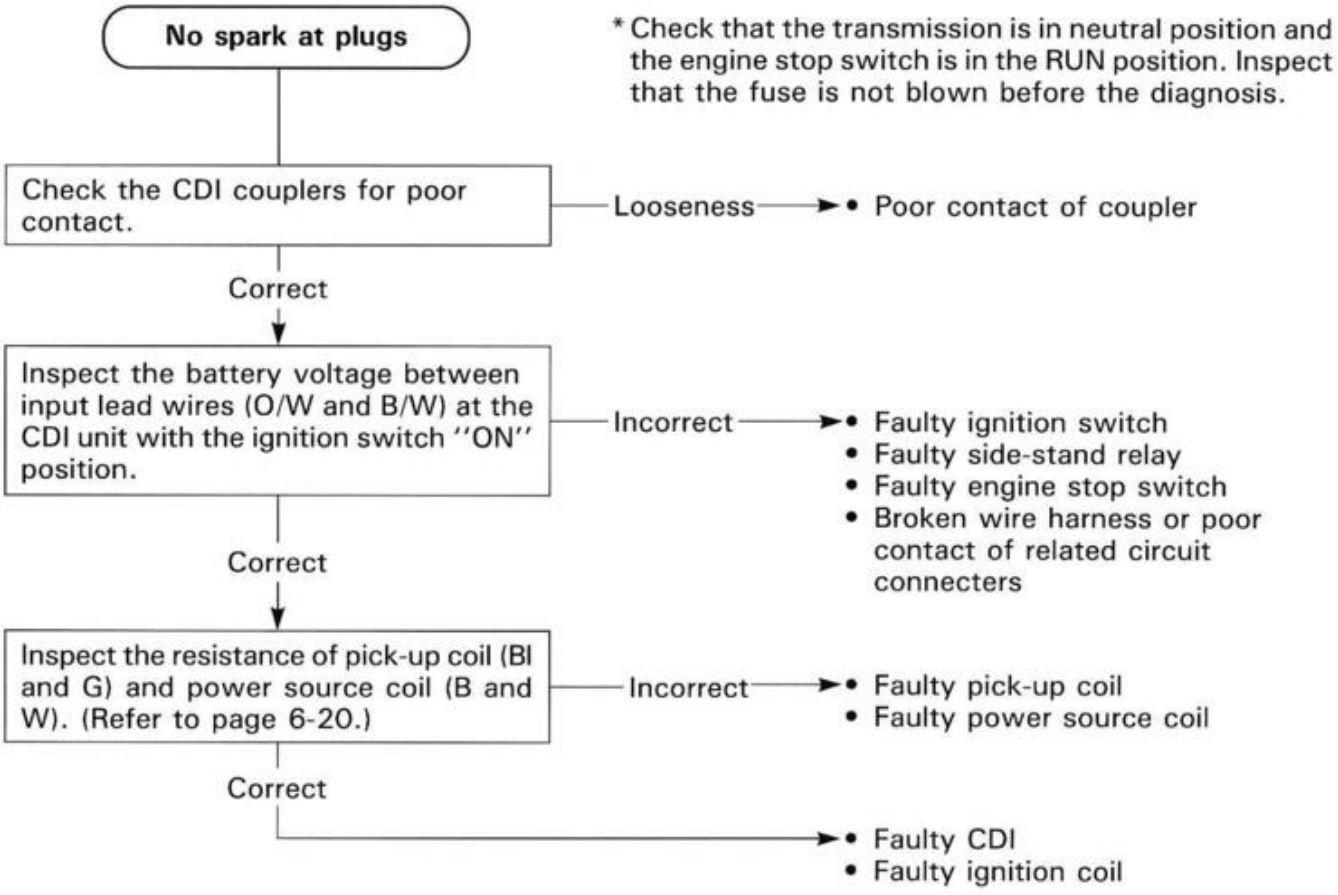
No spark at plugs
Check the CDI couplers for poor contact.
Looseness
• Poor contact of coupler
Correct
Inspect the battery voltage between input lead wires (O/W and B/W) at the CDI unit with the ignition switch "ON" position.
Incorrect
• Faulty ignition switch
• Faulty side-stand relay
• Faulty engine stop switch
• Broken wire harness or poor contact of related circuit connecters
Correct
Inspect the resistance of pick-up coil (Bl and G) and power source coil (B and W). (Refer to page 6-20.)
Incorrect
• Faulty pick-up coil
• Faulty power source coil
Correct
• Faulty CDI
• Faulty ignition coil

* Check that the transmission is in neutral position and the engine stop switch is in the RUN position. Inspect that the fuse is not blown before the diagnosis.

* If only one spark plug does not spark, it is defective or high-tension cord is disconnected because one ignition coil furnishes two spark plugs.

INSPECTION

IGNITION COIL (Checking with Electro Tester)

- Remove the fuel tank.
- Remove the ignition coil.

NOTE:
Make sure that the three-needle sparking distance of electro tester is set at 8 mm (0.3 in).

With the tester and jumper wire, test the ignition coil for sparking performance in accordance with the following two steps.

STEP ① : Connect the jumper wire to the spark plug cap and ignition coil ground.

STEP ② : Switch over the jumper wire to the other plug cap and ground.

If no sparking or orange color sparking occures in the above conditions, it may be caused by defective coil.

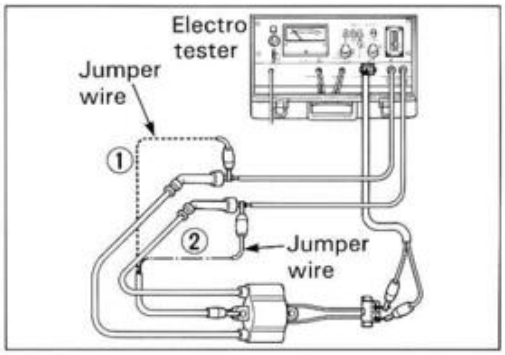

TOOL 09900-28107: Electro tester

Spark performance: Over 8 mm (0.3 in)

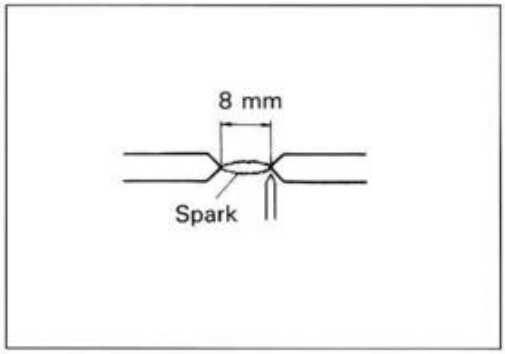

⚠ WARNING

Do not touch the wire clips to prevent an electric shock when testing.

IGNITION COIL (Checking with Pocket Tester)

A SUZUKI pocket tester or an ohm meter may be used, instead of the electro tester. In either case, the ignition coil is to be checked for continuity in both primary and secondary windings. Exact ohmic readings are not necessary, but, if the windings are in sound condition, their continuity will be noted with these approximate ohmic values.

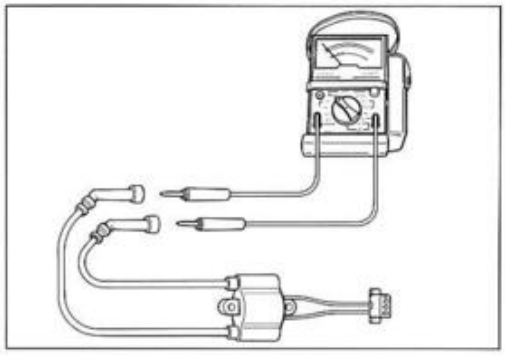

TOOL 09900-25002: Pocket tester

Ignition coil resistance

Primary: 0.07—0.12 Ω (⊕ Black lead—⊖ Black/white lead)

Tester knob indication: X 1Ω range

Secondary: 23—25 kΩ (Plug cap—Plug cap)

Tester knob indication: X 1 kΩ range

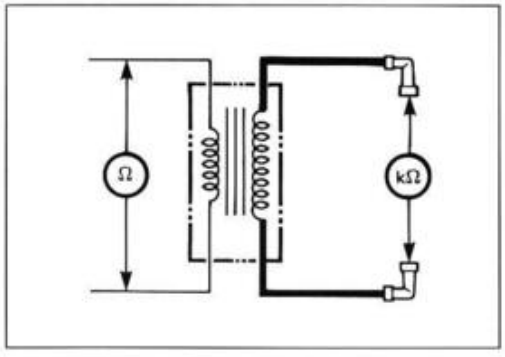

POWER SOURCE COIL AND PICK-UP COIL

- Remove the frame covers and seat.
- Disconnect the lead wire coupler ① from the CDI unit. Measure each coil resistance between lead wires. If the resistance is infinity or less than the specifications, the power source coil and pick-up coil must be replaced.

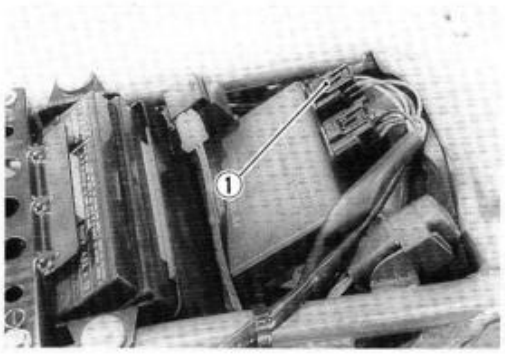

09900-25002: Pocket tester

Power source coil resistance: 0.1—0.2Ω
(Black—White)

Tester knob indication: X 1Ω range

Pick-up coil resistance: 170—256Ω
(Blue—Green)

Tester knob indication: X 100Ω range

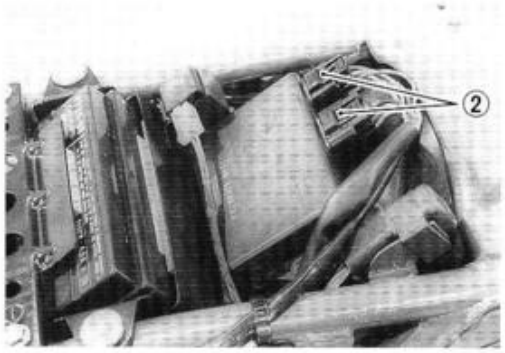

CDI UNIT

- Remove the frame covers and seat.
- Disconnect the lead wire couplers ② from the CDI unit.

Measure the CDI unit resistance between the terminals. If the resistance is incorrect, the CDI unit must be replaced.

NOTE:
As capacitor, thyristors, diodes, etc. are used inside this CDI unit, the resistance values will differ when an ohmmeter other than SUZUKI pocket tester is used.

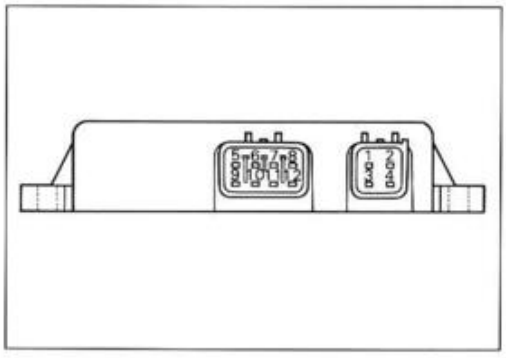

09900-25002: Pocket tester

Tester knob indication: X 1 kΩ range

Unit: kΩ

⊖ Probe of tester	⊕ Probe of tester											
	1	2	3	4	5	6	7	8	9	10	11	12
1		0	6—26	12—50	2.4—10	2.6—12	0	0	50—400	200—∞	35—400	1.2—5
2	0		5.5—24	12—50	2.4—10	2.6—12	0	0	50—400	200—∞	35—500	1.2—5
3	5.5—24	5.5—24		20—90	8—35	8—35	5.5—24	5.5—24	50—400	200—∞	45—500	7—28
4	15—70	15—70	26—150		16—70	17—80	5.5—70	5.5—70	80—500	200—∞	80—∞	14—60
5	2.2—9.5	2.2—9.5	8—35	11—70		3—13	2.2—9.5	2.2—9.5	50—400	200—∞	40—500	1.4—6
6	2.8—12	2.8—12	8—35	17—70	3—13		2.8—12	2.8—12	50—400	200—∞	40—500	1.8—8
7	0	0	6—26	12—50	2.2—9.5	2.6—11		0	50—400	200—∞	35—500	1.2—4.8
8	0	0	6—26	12—50	2.2—9.5	2.6—11	0		50—400	200—∞	70—500	3.6—4.8
⊖ Probe of tester 9	1.8—7.5	1.8—7.5	10—45	24—200	5—22	6—24	1.8—7.5	1.8—7.5		200—∞	70—∞	3.6—11
10	11—50	11—50	22—100	35—400	17—70	17—70	11—50	12—50	80—1000		200—∞	14—60
11	∞	∞	∞	∞	∞	∞	∞	∞	∞	∞		∞
12	1.2—5	1.2—5	7—28	14—60	1.4—6	1.8—8	1.2—5	1.2—5	50—400	200—∞	35—500	

NOTE: When the capacitor is discharged state, the needle of tester swings first then return to a certain value.

∞ : Infinity

SPARK PLUG

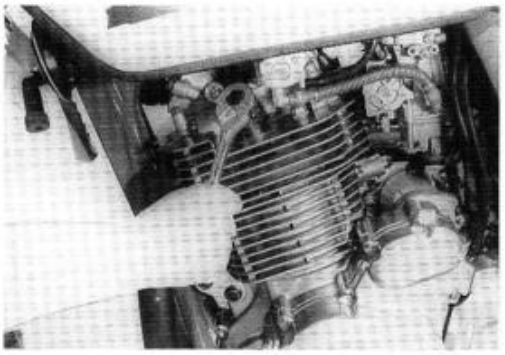

- Remove the spark plugs.

TOOL 09930-10121: Spark plug socket wrench set

Carbon Deposit

Check to see the carbon deposit on the plug.
If the carbon is deposited, remove it with a spark plug cleaner machine or carefully using a tool with a pointed end.

Spark Plug Gap

Measure the plug gap with a thickness gauge if it is correct. If not, adjust it to the following gap.

TOOL 09900-20803: Thickness gauge

Standard: 0.7—0.8 mm (0.028—0.031 in)

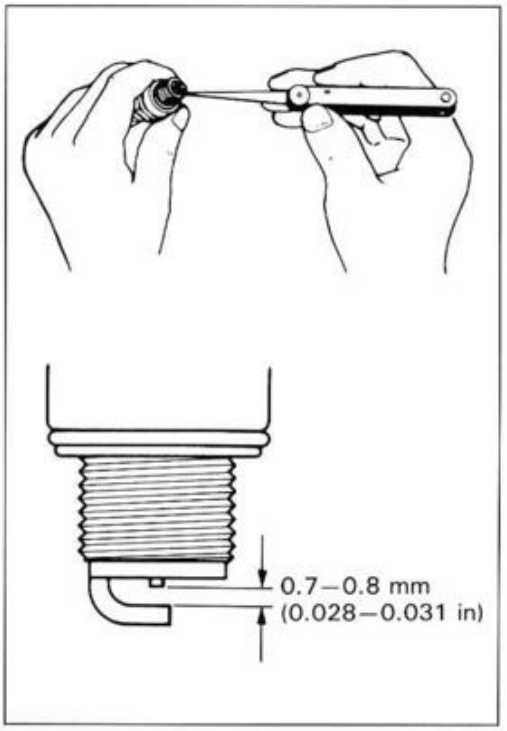

Electrode's Condition

Check to see a worn or burnt condition of the electrode. If it is extremely worn or burnt, replace the plug. Also replace the plug if it has a broken insulator, damaged thread, etc.

Heat Range

NGK CR10E or NIPPONDENSO U31ESR-N should be used as the standard. However, the heat range of the spark plug should be selected to meet the requirements of speed, actual load, fuel and etc. Proper heat range would be indicated if all insulators were LIGHT BROWN in color. If they are blackened by carbon, they should be replaced with a hot type plug NGK CR9E or NIPPONDENSO U27ESR-N.

	Standard	Hot type
NGK	CR10E	CR9E
NIPPONDENSO	U31ESR-N	U27ESR-N

⚠ CAUTION

Confirm the thread size and reach when replacing the plug. If the reach is too short, carbon will be deposited on the screw portion of the plug hole and engine damage may result.

SPEEDOMETER AND PILOT INDICATOR

REMOVAL AND DISASSEMBLY

- Remove the speedometer and pilot indicator. (Refer to page 5-4.)
- Disassemble the speedometer and pilot indicator as follows.

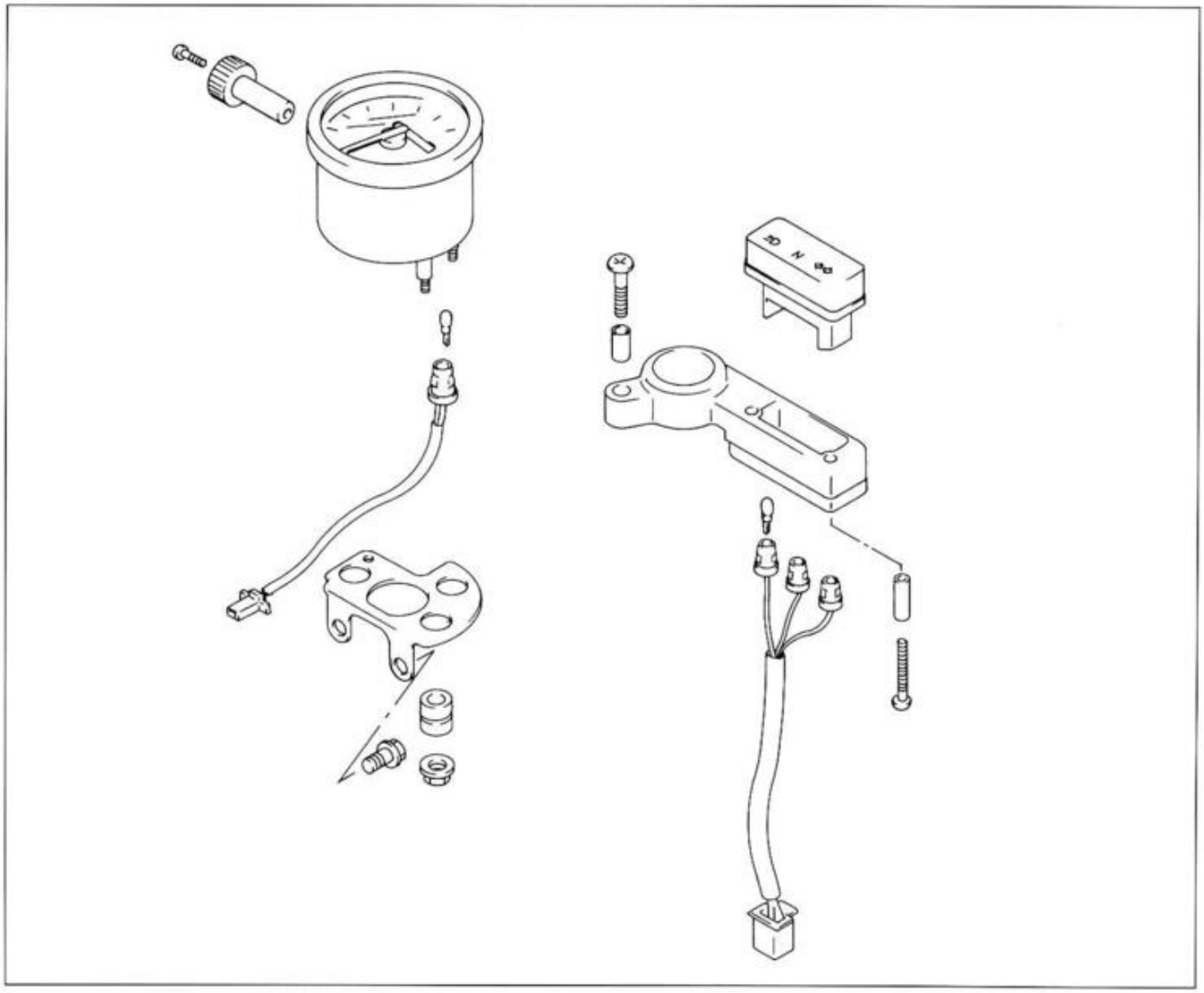

INSPECTION

Using the pocket tester, check the continuity between lead wires in the diagram on next page.
If the continuity measured is incorrect, replace the respective parts.

09900-25002: Pocket tester

Tester knob indication: X 1Ω range

NOTE:
When making this test, it is not necessary to remove the speedometer and pilot indicator.

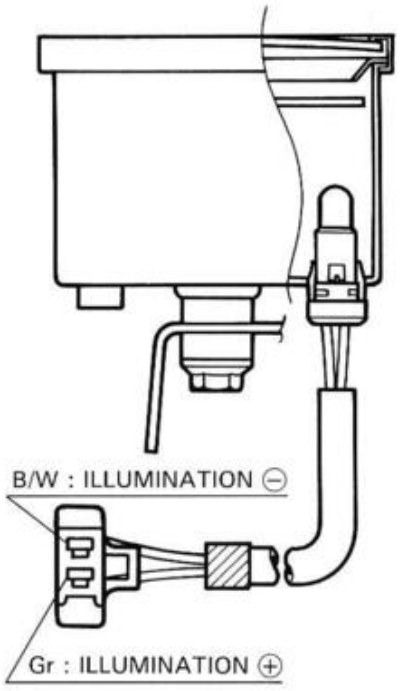

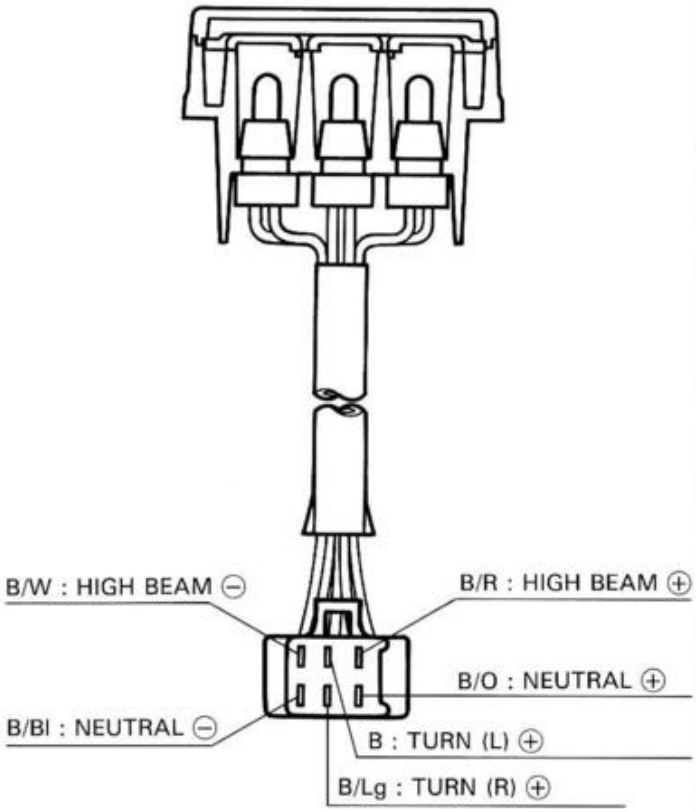

ITEM	⊕ Probe of tester to:	⊖ Probe of tester to:
ILLUMI	Gr	B/W
HIGH BEAM	B/R	B/W
NEUTRAL	B/O	B/Bl
TURN (L)	B	B/Lg
TURN (R)	B/Lg	B

B : Black
Gr : Gray
B/Bl : Black with Blue tracer
B/O : Black with Orange tracer
B/R : Black with Red tracer
B/Lg : Black with Light green tracer
B/W : Black with White tracer

LAMPS

HEADLIGHT

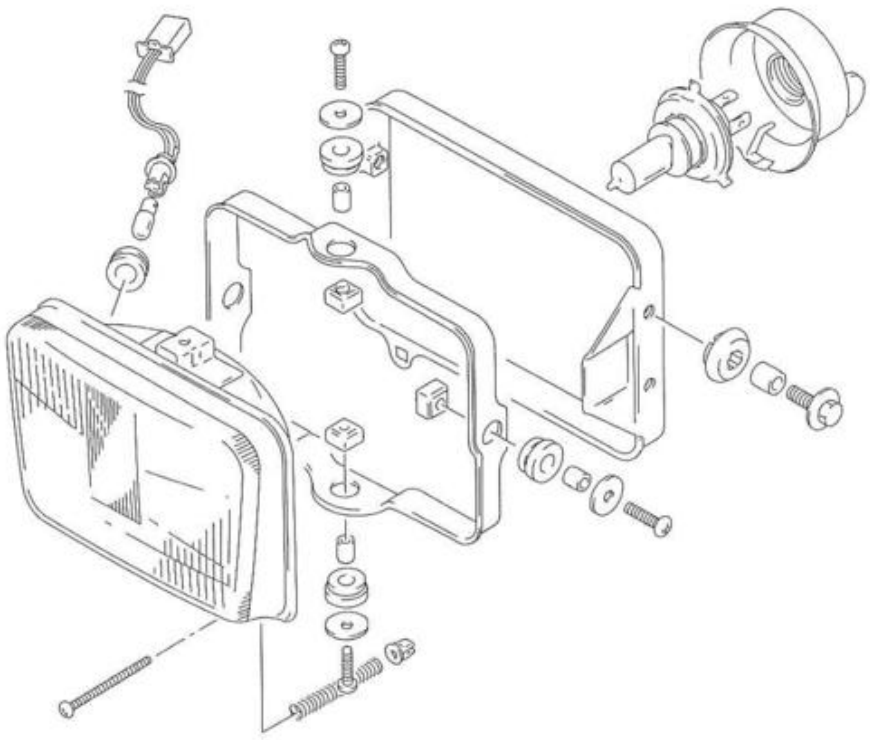

Headlight bulb: 12V 60/55W
Position light bulb: 12V 4W (Except E-03,24,28,33)

NOTE:
Adjust the headlight, both vertical and horizontal, after reassembling.

BULB REPLACEMENT

- Remove the headlight. (Refer to page 5-21.)
- Disconnect the socket ① and remove the rubber cap ②.
- Remove the bulb ③ by unlocking the bulb holder spring ④.
- Reassemble the bulb in the reverse order of removal.

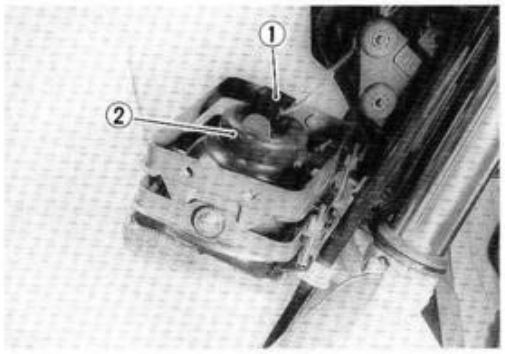

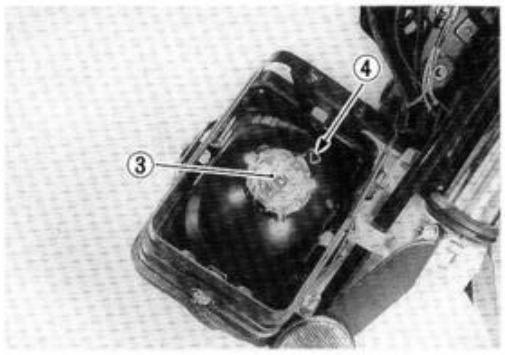

⚠ CAUTION

When replacing the headlight bulb, do not touch the glass. Grasp the new bulb with a clean cloth. If you touch the bulb with your bare hands, clean it with a cloth moistened with alcohol or soapy water to prevent early failure.

TAIL/BRAKE LIGHT, TURN SIGNAL LIGHT AND LICENSE PLATE LIGHT

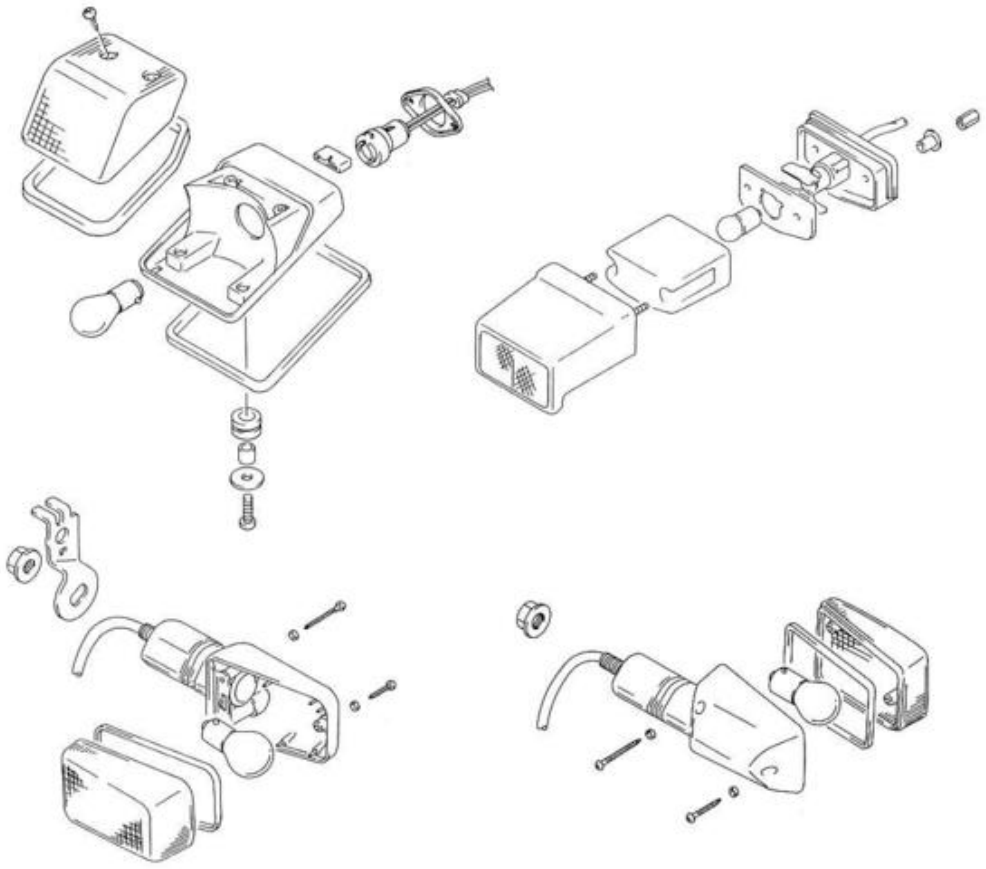

Tail/Brake light bulb: 12V 5/21W
Turn signal light bulb: 12V 21W
License plate light bulb: 12V 5W

BULB REPLACEMENT

- Remove each light lens.
- Push in on the bulb, turn it to the left, and pull it out.

⚠ CAUTION

Do not overtighten the lens fitting screws.

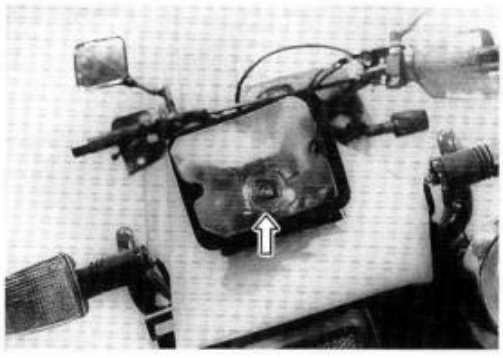

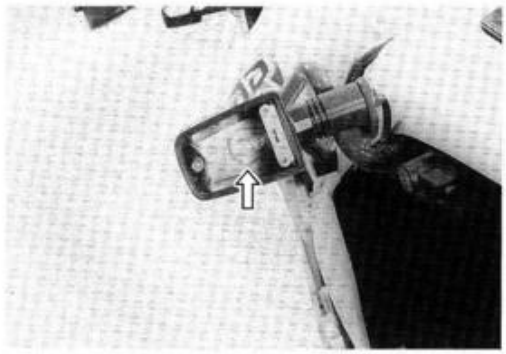

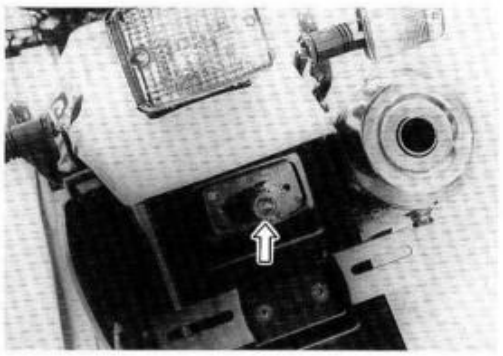

TURN SIGNAL RELAY

The turn signal relay ① is located under the seat.
If the turn signal light does not light. Inspect the bulb or repair the circuit connection.
If the bulb and circuit connection checked are correct, the turn signal relay may be faulty, replace it with a new one.

NOTE:
Be sure that the battery used is in full-charged condition.

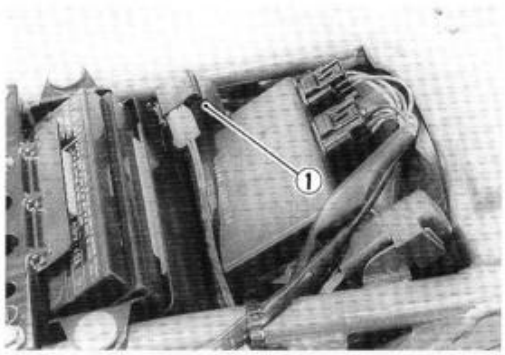

SWITCHES

Inspect each switch for continuity with the pocket tester. If any abnormality is found, replace the respective switch assemblies with new ones.

09900-25002: Pocket tester

Tester knob indication: X 1Ω range

IGNITION SWITCH

Position \ Color	R	O	O/Y	B/W	Gr	Br
OFF						
ON	○——	——○	○——	——○	○——	——○
LOCK						
P	○——	——	——	——	——	——○

LIGHTING SWITCH

Position \ Color	O	Gr	Y/W
OFF			
•	○——	——○	
ON	○——	——○	——○

DIMMER SWITCH

Position \ Color	Y/W	W	Y
HI	○——	——	——○
LO	○——	——○	

TURN SIGNAL SWITCH

Position \ Color	Lg	Lbl	B
L		○——	——○
PUSH			
R	○——	——○	

PASSING LIGHT SWITCH

Position \ Color	O/R	Y
•		
PUSH	○——	——○

ENGINE STOP SWITCH

Position \ Color	O	O/W
OFF		
RUN	○——	——○

STARTER BUTTON

Position \ Color	O/W	Y/G
•		
PUSH	○——	——○

HORN BUTTON

Position \ Color	B/Bl	B/W
•		
PUSH	○——	——○

FRONT BRAKE SWITCH

Position \ Color	O	B
OFF		
ON	○——	——○

REAR BRAKE SWITCH

Position \ Color	O	W/B
OFF		
ON	○——	——○

WIRE COLOR

B : Black **Lbl: Light blue** **R : Red**
Br : Brown **Lg : Light green** **Y : Yellow**
Gr : Gray **O : Orange** **W : White**
B/Bl : Black with Blue tracer
B/W : Black with White tracer
O/Bl : Orange with Blue tracer
O/R : Orange with Red tracer
O/W : Orange with White tracer
O/Y : Orange with Yellow tracer
W/B : White with Black tracer
Y/G : Yellow with Green tracer
Y/W : Yellow with White tracer

BATTERY

SPECIFICATIONS

Type designation	YTX9-BS
Capacity	12V, 28.8 kC (8 Ah)/10HR
Standard electrolyte S.G.	1.320 at 20°C (68°F)

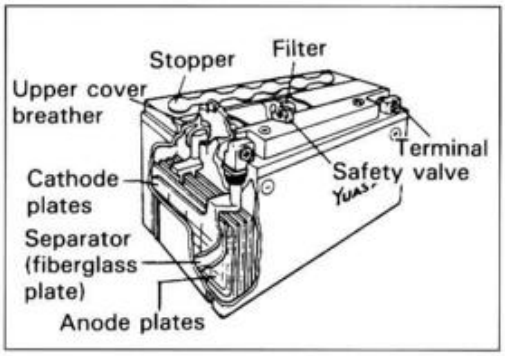

INITIAL CHARGING

Filling electrolyte

- Remove the aluminum tape ① sealing the battery electrolyte filler holes.

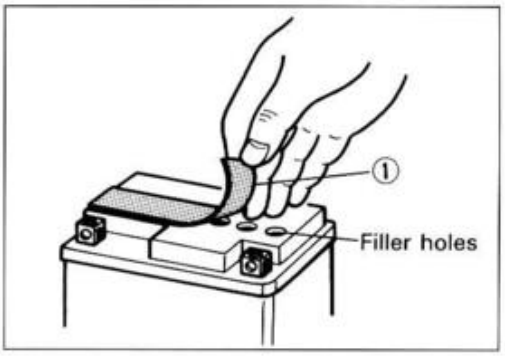

- Remove the caps ② .

NOTE:

* *After filling the electrolyte completely, use the removed cap ② as the sealed caps of battery-filler holes.*

* *Do not remove or pierce the sealed areas ③ of the electrolyte container.*

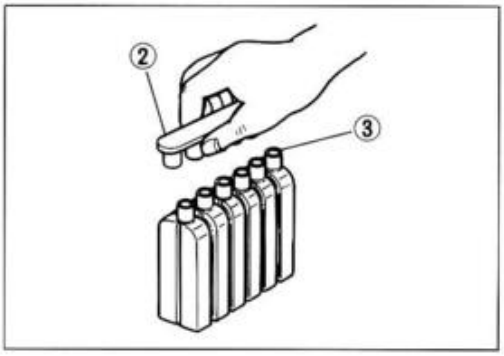

- Insert the nozzles of the electrolyte container into the battery's electrolyte filler holes, holding the container firmly so that it does not fall. Take precaution not to allow any of the fluid to spill.

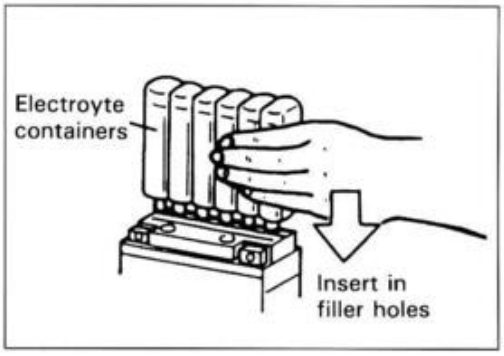

- Make sure air bubbles are coming up each electrolyte container, and leave in this position for about more than 20 minutes.

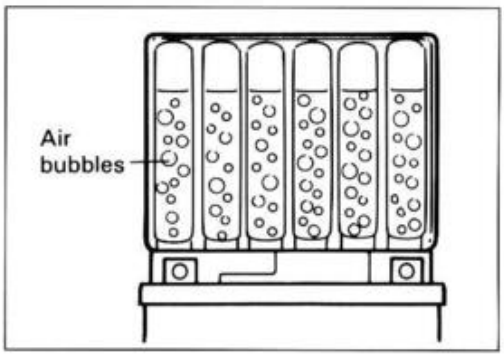

NOTE:
If no air bubbles are coming up from a filler port, tap the bottom of the two or three times.
Never remove the container from the battery.

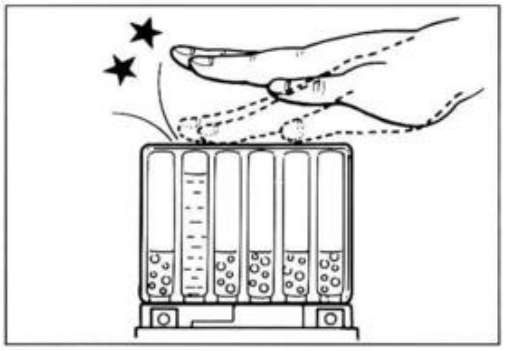

- After confirming that the electrolyte has entered the battery completely, remove the electrolyte containers from the battery. Wait for around 20 minutes.
- Insert the caps into the filler holes, pressing in firmly so that the top of the caps do not protrude above the upper surface of the battery's top cover.

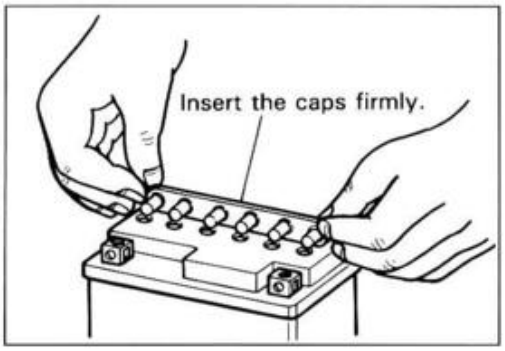

⚠ CAUTION

*** Never use anything except the specified battery.**
*** Once install the caps to the battery; do not remove the caps.**

- Using SUZUKI pocket tester, measure the battery voltage. The tester should indicate more than 12.5—12.6V (DC) as shown in the Fig. If the battery voltage is lower than the specification, charge the battery with a battery charger. (Refer to the recharging operation.)

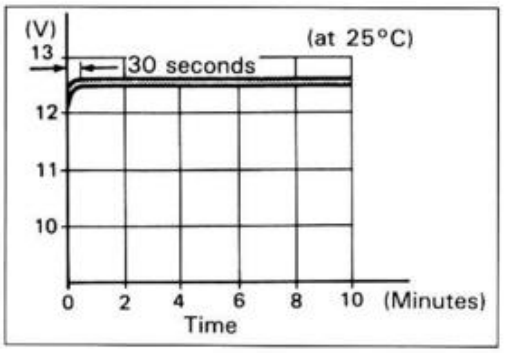

NOTE:
Initial charging for a new battery is recommended if two years have elapsed since the date of manufacture.

SERVICING

Visually inspect the surface of the battery container. If any signs of cracking or electrolyte leakage from the sides of the battery have occurred, replace the battery with a new one. If the battery terminals are found to be coated with rust or an acidic white powdery substance, then this can be cleaned away with sandpaper.

RECHARGING OPERATION

- Using the pocket tester, check the battery voltage. If the voltage reading is less than the 12.0V (DC), recharge the battery with a battery charger.

⚠ CAUTION

When recharging the battery, remove the battery from the motorcycle.

NOTE:
Do not remove the caps on the battery top while recharging.

Recharging time: 4A for one hour or 0.9A for 5 hours

⚠ CAUTION

Be careful not to permit the charging current to exceed 4A at any time.

- After recharging, wait for more than 30 minutes and check the battery voltage with a pocket tester.
- If the battery voltage is less than the 12.5V, recharge the battery again.
- If battery voltage is still less than 12.5V, after recharging, replace the battery with a new one.
- When the motorcycle is not used for a long period, check the battery every 1 month to prevent the battery discharge.

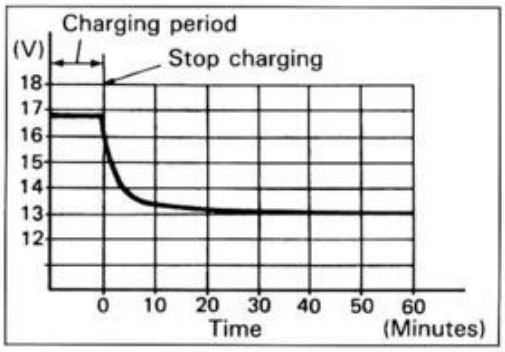

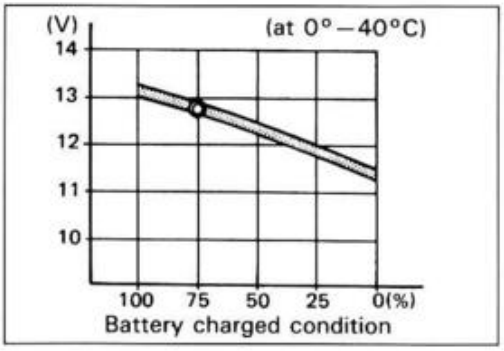

SERVICING INFORMATION

CONTENTS

TROUBLESHOOTING 7- 1
WIRING DIAGRAM 7- 8
WIRE, CABLE AND HOSE ROUTING 7-11
WIRE ROUTING 7-12
CABLE ROUTING 7-15
CARBURETOR AND AIR CLEANER HOSE ROUTING 7-17
PAIR (AIR SUPPLY) SYSTEM HOSE ROUTING 7-18
FRONT BRAKE HOSE ROUTING 7-19
REAR BRAKE HOSE ROUTING 7-20
HEAT SHIELD ADHERING 7-21
SIDE STAND SPRING SET-UP 7-21
SPECIAL TOOLS 7-22
TIGHTENING TORQUE 7-25
SERVICE DATA 7-28

TROUBLESHOOTING

ENGINE

Complaint	Symptom and possible causes	Remedy
Engine will not start, or is hard to start.	**Compression too low**	
	1. Out of adjustment valve clearance.	Adjust.
	2. Worn valve guides or poor seating of valves.	Repair or replace.
	3. Mistiming valves.	Adjust.
	4. Excessively worn piston rings.	Replace.
	5. Worn-down cylinder bores.	Replace or rebore.
	6. Too slowly starter motor cranks.	See electrical section.
	7. Poor seating of spark plugs.	Retighten.
	Plugs not sparking	
	1. Fouled spark plugs.	Clean.
	2. Wet spark plugs.	Clean and dry.
	3. Defective ignition coil.	Replace.
	4. Open or short in high-tension cords.	Replace.
	5. Defective generator or CDI unit.	Replace.
	6. Defective side stand switch or side stand relay.	Replace.
	No fuel reaching the carburetor	
	1. Clogged fuel tank cap.	Clean or replace.
	2. Clogged or defective fuel valve.	Clean or replace.
	3. Defective carburetor needle valve.	Replace.
	4. Clogged fuel hose or vacuum hose.	Clean or replace.
	5. Clogged fuel filter.	Clean or replace.
Engine stalls easily.	1. Fouled spark plugs.	Clean.
	2. Defective signal generator or CDI unit.	Replace.
	3. Clogged fuel hose.	Clean.
	4. Clogged jets in carburetor.	Clean.
	5. Out of adjustment valve clearance.	Adjust.
Noisy engine.	**Excessive valve chatter**	
	1. Too large valve clearance.	Adjust.
	2. Weakened or broken valve springs.	Replace.
	3. Worn down rocker arm or rocker arm shaft.	Replace.
	4. Worn and burnt camshaft journal.	Replace.
	Noise seems to come from piston	
	1. Worn down piston or cylinder.	Replace.
	2. Fouled with carbon combustion chamber.	Clean.
	3. Worn piston pins or piston pin bore.	Replace.
	4. Worn piston rings or ring grooves.	Replace.
	Noise seems to come from timing chain	
	1. Stretched chain.	Replace.
	2. Worn sprocket.	Replace.
	3. Not working tension adjuster.	Repair or replace.
	Noise seems to come from clutch	
	1. Worn splines of countershaft or hub.	Replace.
	2. Worn teeth of clutch plates.	Replace.
	3. Distorted clutch plates, driven and drive.	Replace.
	4. Worn clutch release bearing.	Replace.
	5. Weakened clutch dampers.	Replace the primary driven gear.

Complaint	Symptom and possible causes	Remedy
Noisy engine.	**Noise seems to come from crankshaft**	
	1. Due to wear rattling bearings.	Replace.
	2. Worn and burnt big-end bearings.	Replace.
	3. Too large thrust clearance.	Replace conrod.
	Noise seems to come from transmission	
	1. Worn or rubbing gears.	Replace.
	2. Badly worn splines.	Replace.
	3. Worn or rubbing primary gears.	Replace.
	4. Badly worn bearings.	Replace.
Slipping clutch.	1. Out of adjustment or loss of play clutch control.	Adjust.
	2. Weakened clutch springs.	Replace.
	3. Worn or distorted pressure plate.	Replace.
	4. Distorted clutch plates, driven and drive.	Replace.
Dragging clutch.	1. Clutch control out of adjustment or loss of play.	Adjust
	2. Some clutch springs weakened while others are not.	Replace.
	3. Distorted pressure plate or clutch plates.	Replace.
Transmission will not shift.	1. Broken gearshift cam.	Replace.
	2. Distorted gearshift forks.	Replace.
	3. Worn gearshift pawl.	Replace.
Transmission will not shift back.	1. Broken return spring on shift shaft.	Replace.
	2. Rubbing or stickly shift shaft.	Repair or replace.
	3. Distorted or worn gearshift forks.	Replace.
Transmission jumps out of gear.	1. Worn shifting gears on driveshaft or countershaft.	Replace.
	2. Distorted or worn gearshift forks.	Replace.
	3. Weakened stopper spring on gearshift cam.	Replace.
	4. Worn gearshift pawl.	Replace.
Engine idles poorly.	1. Out of adjustment valve clearance.	Adjust.
	2. Poor seating of valves.	Replace or repair.
	3. Defective valve guides.	Replace.
	4. Worn rocker arms or arm shafts.	Replace.
	5. Too wide spark plug gaps.	Adjust or replace.
	6. Defective ignition coil.	Replace.
	7. Defective generator or CDI unit.	Replace.
	8. Out of adjustment in carburetor float-chamber fuel level.	Adjust.
	9. Clogged jets.	Clean.

Complaint	Symptom and possible causes	Remedy
Engine runs poorly in high speed range.	1. Weakened valve springs.	Replace.
	2. Worn camshafts.	Replace.
	3. Valve timing out of adjustment.	Adjust.
	4. Too narrow spark plug gaps.	Adjust.
	5. Ignition not advanced sufficiently due to poorly working timing advance circuit.	Replace CDI unit.
	6. Defective ignition coil.	Replace.
	7. Defective generator or CDI unit.	Replace.
	8. Too low float-chamber fuel level.	Adjust.
	9. Clogged air cleaner element.	Clean.
	10. Clogged fuel hose, resulting in inadequate fuel supply to carburetor.	Clean and prime.
Dirty or heavy exhaust smoke.	1. Too much engine oil in the engine.	Check with inspection window drain out excess oil.
	2. Worn piston rings or cylinder.	Replace.
	3. Worn valve guides.	Replace.
	4. Scuffed cylinder wall.	Replace.
	5. Worn valves stems.	Replace.
	6. Defective stem seal.	Replace.
	7. Worn oil ring side rails.	Replace.
Engine lacks power.	1. Loss of valve clearance.	Adjust.
	2. Weakened valve springs.	Replace.
	3. Out of adjustment valve timing.	Adjust.
	4. Worn piston rings or cylinder.	Replace.
	5. Poor seating of valves.	Repair.
	6. Fouled spark plug.	Clean or replace.
	7. Incorrect spark plug.	Adjust or replace.
	8. Clogged jets in carburetor.	Clean.
	9. Out of adjustment float-chamber fuel level.	Adjust.
	10. Clogged air cleaner element.	Clean.
	11. Sucking air from intake pipe.	Retighten or replace.
	12. Too much engine oil.	Drain out excess oil.
	13. Diffective generator, CDI unit or ignition coil.	Replace.
Engine overheats.	1. Heavy carbon deposit on piston crown.	Clean.
	2. Not enough oil in the engine.	Add oil.
	3. Defective oil pump or clogged oil circuit.	Replace or clean.
	4. Too low in float chamber fuel level.	Adjust.
	5. Sucking air from intake pipes.	Retighten or replace.
	6. Use incorrect engine oil.	Change.
	7. Oil cooler.	Clean.

CARBURETOR

Complaint	Symptom and possible causes	Remedy
Trouble with starting.	1. Clogged starter jet.	Clean.
	2. Clogged starter pipe.	Clean.
	3. Air leaking from a joint between starter body and carburetor.	Check starter body and carburetor for tightness, adjust and replace gasket.
	4. Air leaking from carburetor's joint or vacuum gauge joint.	Check and adjust.
	5. Not operation properly starter plunger.	Check and adjust.
Idling or low-speed trouble.	1. Clogged or loose pilot jet, pilot air jet.	Check and clean.
	2. Air leaking from carburetor's joint, vacuum hose joint, or starter.	Check and adjust.
	3. Clogged pilot outlet or bypass.	Check and clean.
	4. Not fully closed starter plunger.	Check and adjust.
Medium-or high speed trouble.	1. Clogged main jet or main air jet.	Check and clean.
	2. Clogged needle jet.	Check and clean.
	3. Not operating properly throttle valve.	Check throttle valve for operation.
	4. Clogged fuel filter.	Check and clean.
Overflow and fuel level fluctuations.	1. Worn or damaged needle valve.	Replace.
	2. Broken spring in needle valve.	Replace.
	3. Not working properly float.	Check and adjust.
	4. Foreign matter has adhered to needle valve.	Clean.
	5. Too high or low fuel level.	Adjust float height.

CHASSIS

Complaint	Symptom and possible causes	Remedy
Heavy steering.	1. Overtightened steering stem nut.	Adjust.
	2. Broken bearing in steering stem.	Replace.
	3. Distorted steering stem.	Replace.
	4. Not enough pressure in tires.	Adjust.
Wobbly handlebars.	1. Loss of balance between right and left front forks.	Replace.
	2. Distorted front fork.	Repair or replace.
	3. Distorted front axle or crooked tire.	Replace.
Wobby front wheel.	1. Distorted wheel rim.	Replace.
	2. Worn front wheel bearings.	Replace.
	3. Defective or incorrect tire.	Replace.
	4. Loose axle or axle holder nuts.	Retighten.
	5. Incorrect front fork oil level.	Adjust.
Front suspension too soft.	1. Weakened springs.	Replace.
	2. Not enough fork oil.	Replenish.
Front suspension too stiff.	1. Too viscous fork oil.	Replace.
	2. Too much fork oil.	Drain excess oil.
Noisy front suspension.	1. Not enough fork oil.	Replenish.
	2. Loose bolts and nuts on suspension.	Retighten.

Complaint	Symptom and possible causes	Remedy
Wobbly rear wheel.	1. Distorted wheel rim. 2. Worn rear wheel bearings or swingarm bearings. 3. Defective or incorrect tire. 4. Worn swingarm and rear suspension related bearings. 5. Loose nuts or bolts on rear suspensions.	Replace. Replace. Replace. Replace. Retighten.
Rear suspension too soft.	1. Weakened shock absorber spring. 2. Improperly set rear suspension adjuster. 3. Leakage oil of shock absorber.	Replace. Adjust. Replace.
Rear suspension too stiff.	1. Improperly set rear suspension adjuster. 2. Bent shock absorber shaft. 3. Bent swingarm. 4. Worn swingarm and rear suspension related bearings.	Adjust. Replace. Replace. Replace.
Noisy rear suspension.	1. Loose nuts or bolts on rear suspension. 2. Worn swingarm and rear suspension related bearings.	Retighten. Replace.

BRAKES

Complaint	Symptom and possible causes	Remedy
Insufficient brake power.	1. Leakage of brake fluid from hydraulic system. 2. Worn pads. 3. Oil adhesion of engaging surface of pads. 4. Worn disc. 5. Air in hydraulic system.	Repair or replace. Replace. Clean disc and pads. Replace. Bleed air.
Brake squeaking.	1. Carbon adhesion on pad surface. 2. Tilted pad. 3. Damaged wheel bearing. 4. Loosen front-wheel axle or rear-wheel axle. 5. Worn pads. 6. Foreign material in brake fluid. 7. Clogged return port of master cylinder.	Repair surface with sandpaper. Modify pad fitting or replace. Replace. Tighten to specified torque. Replace. Replace brake fluid. Disassemble and clean master cylinder.
Excessive brake lever or pedal stroke.	1. Air in hydraulic system. 2. Insufficient brake fluid. 3. Improper quality of brake fluid.	Bleed air. Replenish fluid to specified level; bleed air. Replace with correct fluid.
Leakage of brake fluid.	1. Insufficient tightening of connection joints. 2. Cracked hose. 3. Worn piston and/or cup.	Tighten to specified torque. Replace. Replace piston and/or cup.

ELECTRICAL

Complaint	Symptom and possible causes	Remedy
No sparking or poor sparking.	1. Defective ignition coil. 2. Defective spark plugs. 3. Defective generator or CDI unit.	Replace. Replace. Replace.
Spark plug soon become fouled with carbon.	1. Mixture too rich. 2. Idling speed set too high. 3. Incorrect gasoline. 4. Dirty element in air cleaner. 5. Too cold spark plugs.	Adjust carburetor. Adjust carburetor. Change. Clean. Replace with hot type plugs.
Spark plugs become fouled too soon.	1. Worn piston rings. 2. Worn piston or cylinder. 3. Excessive clearance of valve stems in valve guides. 4. Worn stem oil seal.	Replace. Replace. Replace. Replace.
Spark plug electrodes overheat or burn.	1. Too hot spark plugs. 2. Overheated the engine. 3. Loose spark plugs. 4. Too lean mixture.	Replace with cold type plugs. Tune up. Retighten. Adjust carburetor.
Generator does not charge.	1. Open or short lead wires, or loose lead connections. 2. Shorted, grounded or open generator coils. 3. Shorted or panctured regulator/rectifier.	Repair or replace or retighten. Replace. Replace.
Generator does charge, but charging rate is below the specification.	1. Lead wires tend to get shorted or open-circuited or loosely connected at terminals. 2. Grounded or open-circuited stator coils or generator. 3. Defective regulator/rectifier. 4. Defective cell plates in the battery.	Repair or retighten. Replace. Replace. Replace the battery.
Generator overcharges.	1. Internal short-circuit in the battery. 2. Damaged or defective regulator/rectifier. 3. Poorly grounded regulator/rectifier.	Replace the battery. Replace. Clean and tighten ground connection.
Unstable charging.	1. Lead wire insulation frayed due to vibration, resulting in intermittent shorting. 2. Internally shorted generator. 3. Defective regulator/rectifier.	Repair or replace. Replace. Replace.
Starter button is not effective.	1. Run down battery. 2. Defective switch contacts. 3. Not seating properly brushes on commutator in starter motor. 4. Defective starter relay/starter interlock switch.	Repair or replace. Replace. Repair or replace. Replace.

BATTERY

Complaint	Symptom and possible causes	Remedy
"Sulfation", acidic white powdery substance or spots on surfaces of cell plates.	1. Cracked battery case. 2. Battery has been left in a run-down condition for a long time.	Replace the battery. Replace the battery.
Battery runs down quickly.	1. Not correct the charging system. 2. Cell plates have lost much of their active material as a result of overcharging. 3. A short-circuit condition exists within the battery. 4. Too low battery voltage. 5. Too old battery.	Check the generator, regulator/rectifier and circuit connections and make necessary adjustments to obtain specified charging operation. Replace the battery, and correct the charging system. Replace the battery. Recharge the battery fully. Replace the battery.
Battery "sulfation".	1. Too low or too high charging rate. (When not in use batteries should be checked at least once a month to avoid sulfation.) 2. Left unused the battery for too long in cold climate.	Replace the battery. Replace the battery, if badly sulfated.
Battery discharges too rapidly.	Dirty container top and sides.	Clean.

WIRING DIAGRAM

FOR CANADA AND U.S.A.

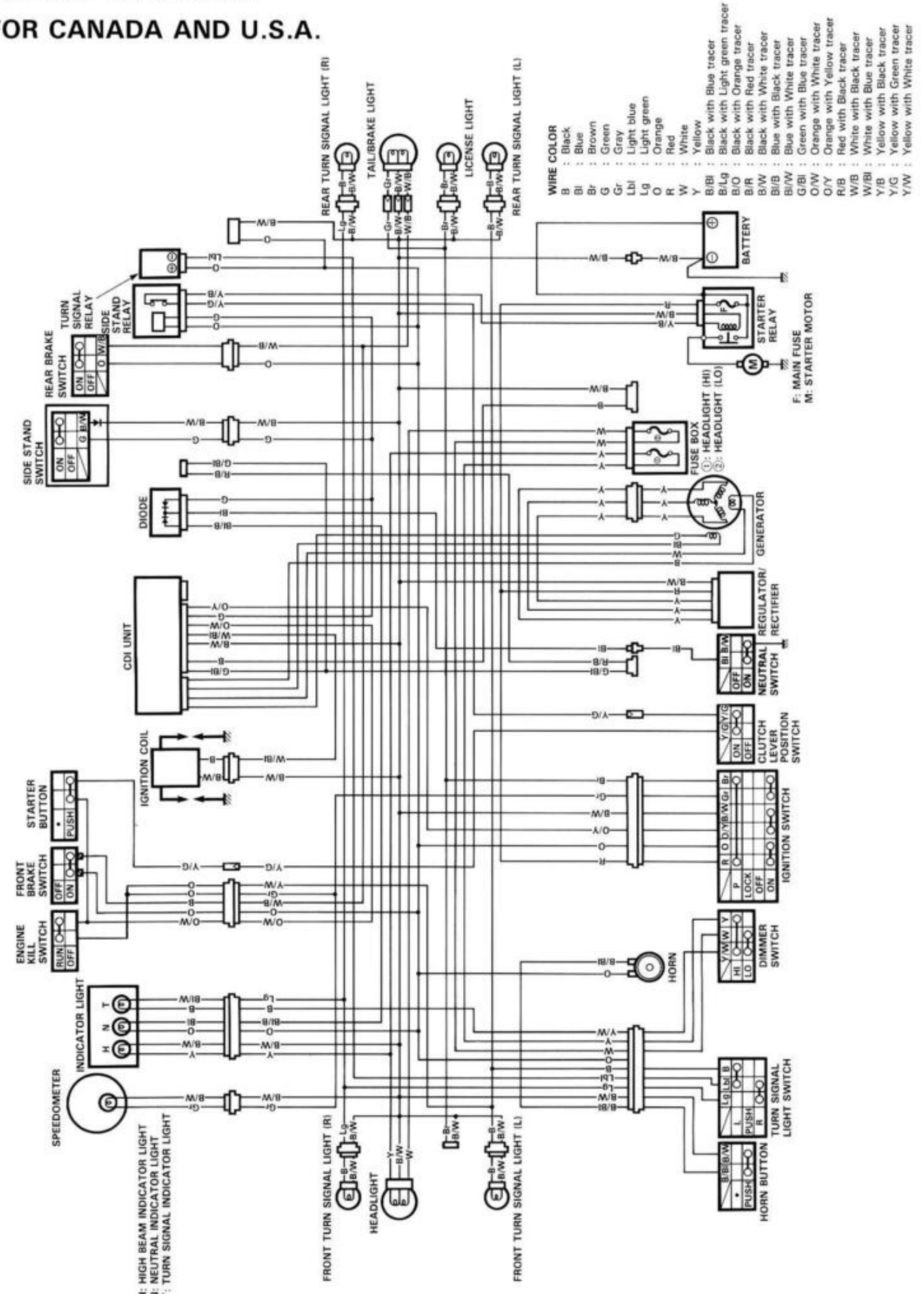

For Australia

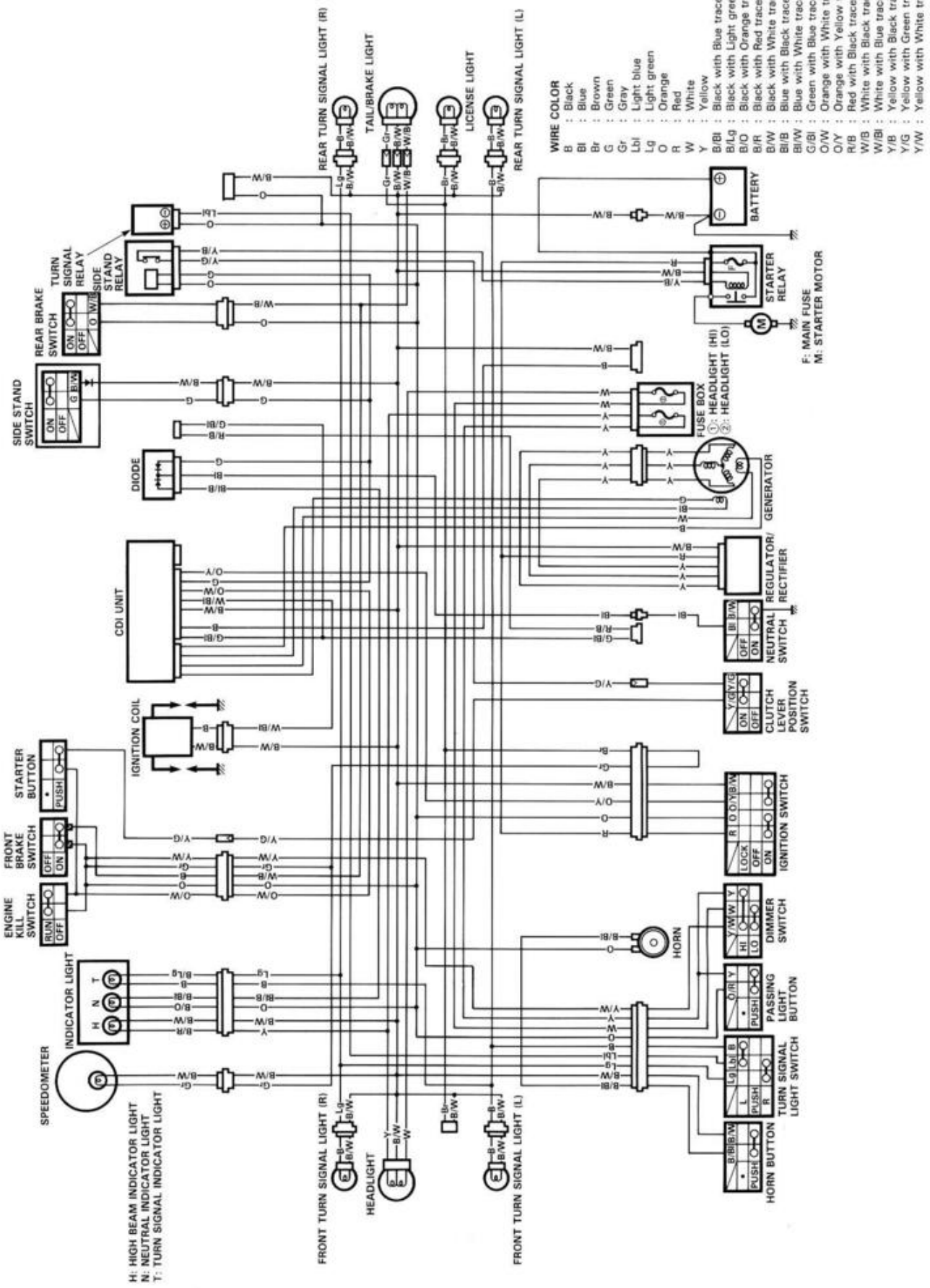

For Austria and Switzerland

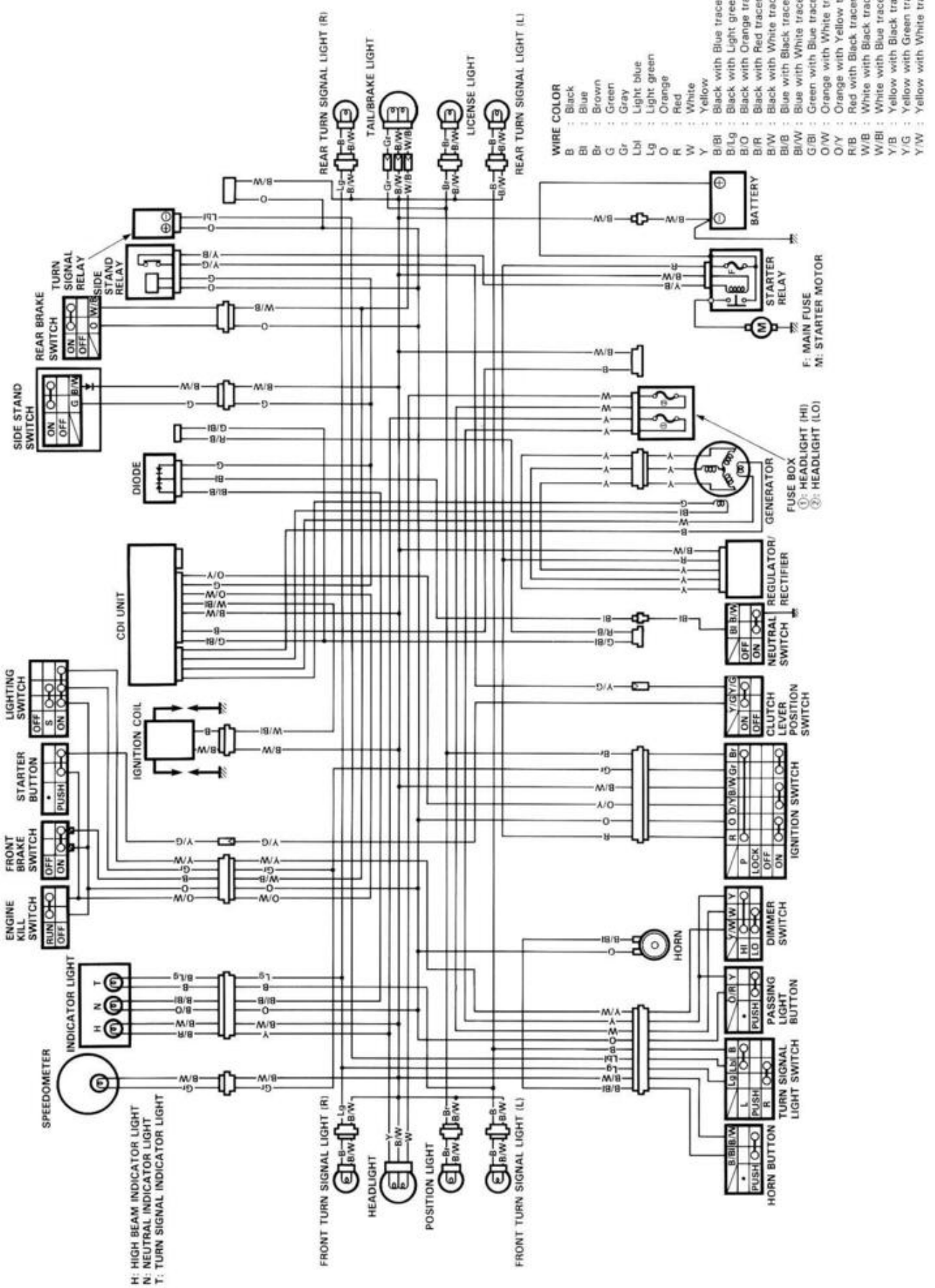

For the others

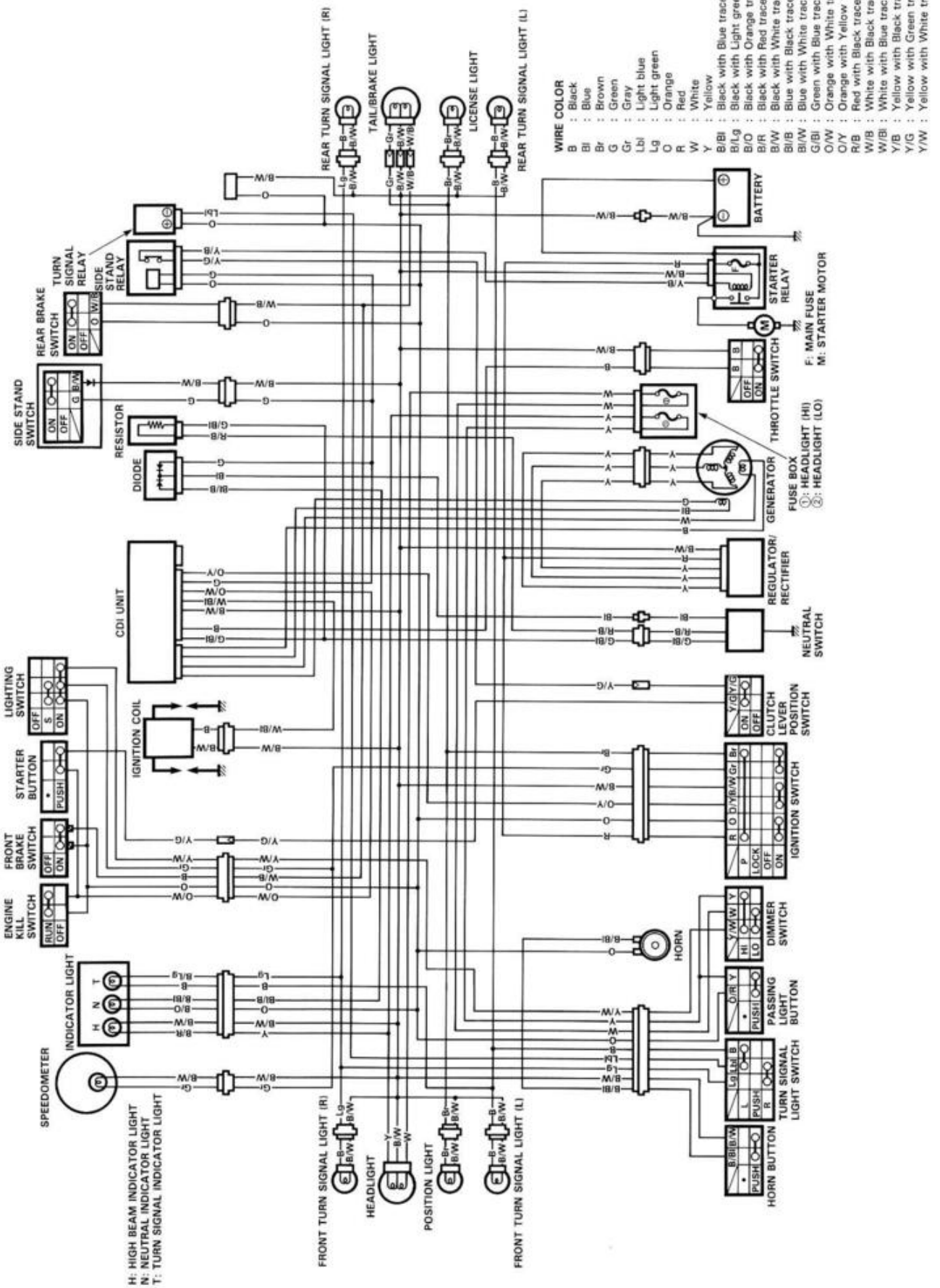

WIRE, CABLE AND HOSE ROUTING

WIRE ROUTING

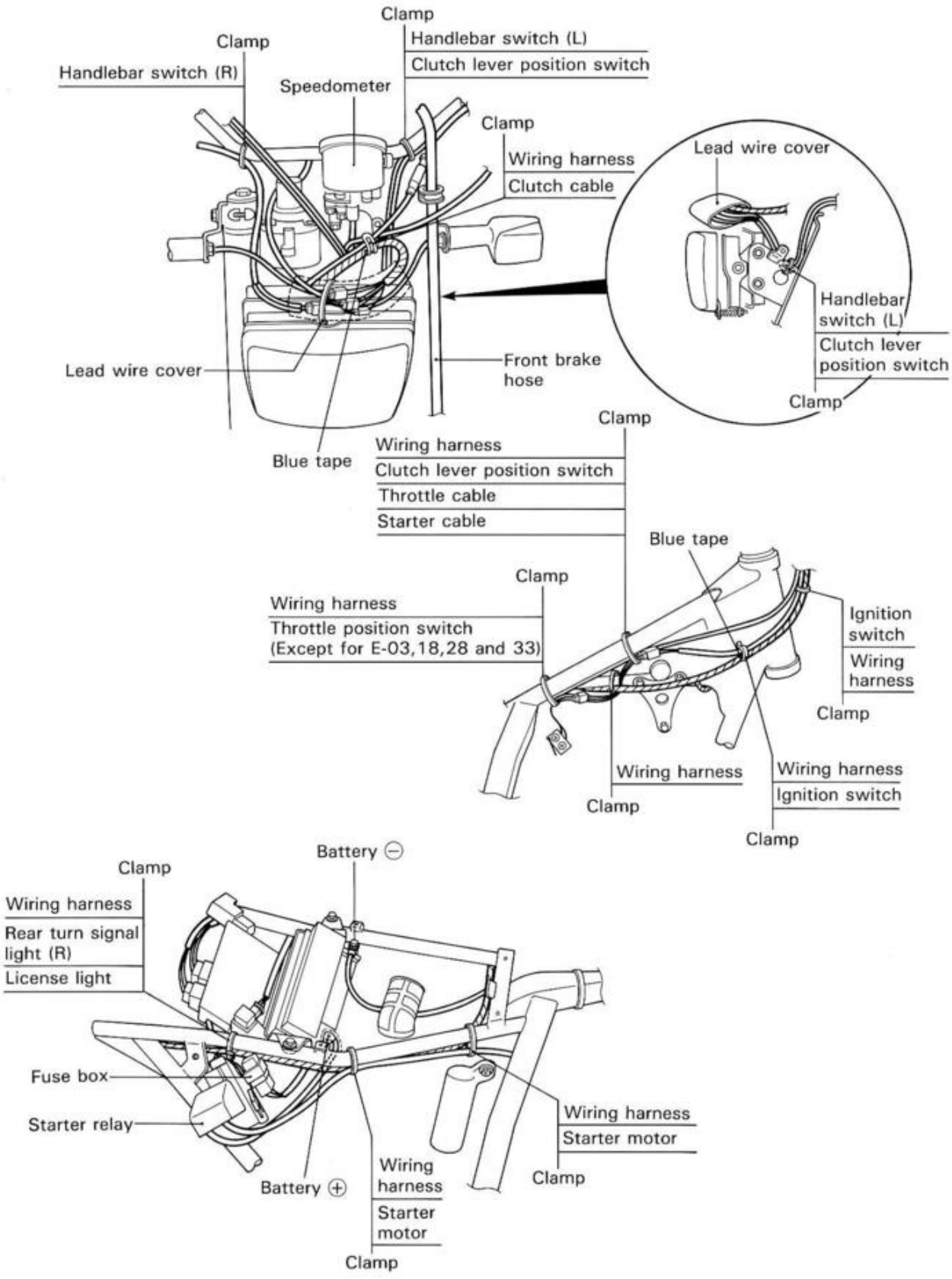

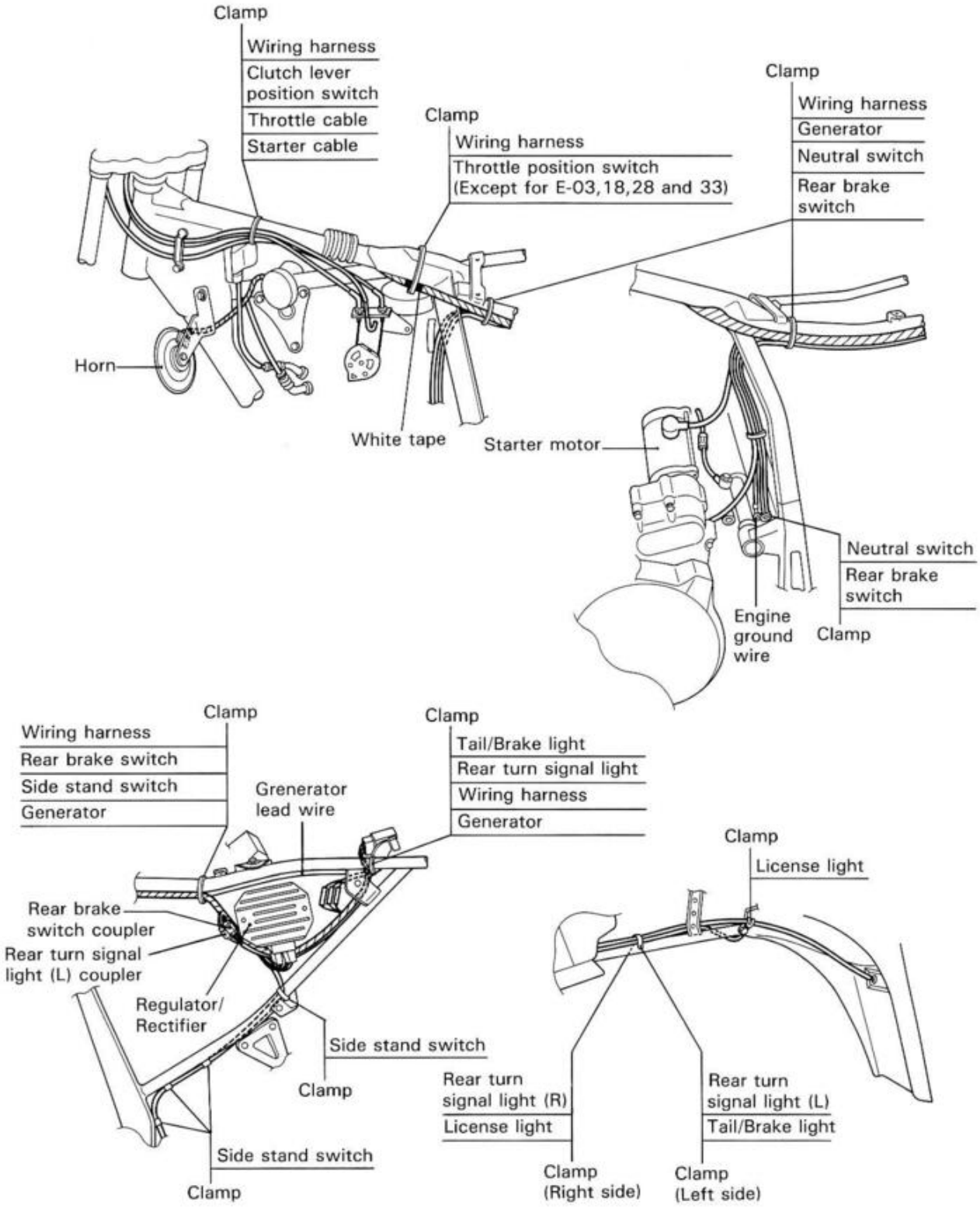
Clamp
Wiring harness
Clutch lever position switch
Throttle cable
Starter cable
Clamp
Wiring harness
Throttle position switch (Except for E-03,18,28 and 33)
Clamp
Wiring harness
Generator
Neutral switch
Rear brake switch
Horn
White tape
Starter motor
Neutral switch
Rear brake switch
Engine ground wire
Clamp
Clamp
Wiring harness
Rear brake switch
Side stand switch
Generator
Grenerator lead wire
Clamp
Tail/Brake light
Rear turn signal light
Wiring harness
Generator
Rear brake switch coupler
Rear turn signal light (L) coupler
Regulator/ Rectifier
Side stand switch
Clamp
Side stand switch
Clamp
Clamp
License light
Rear turn signal light (R)
License light
Rear turn signal light (L)
Tail/Brake light
Clamp (Right side)
Clamp (Left side)

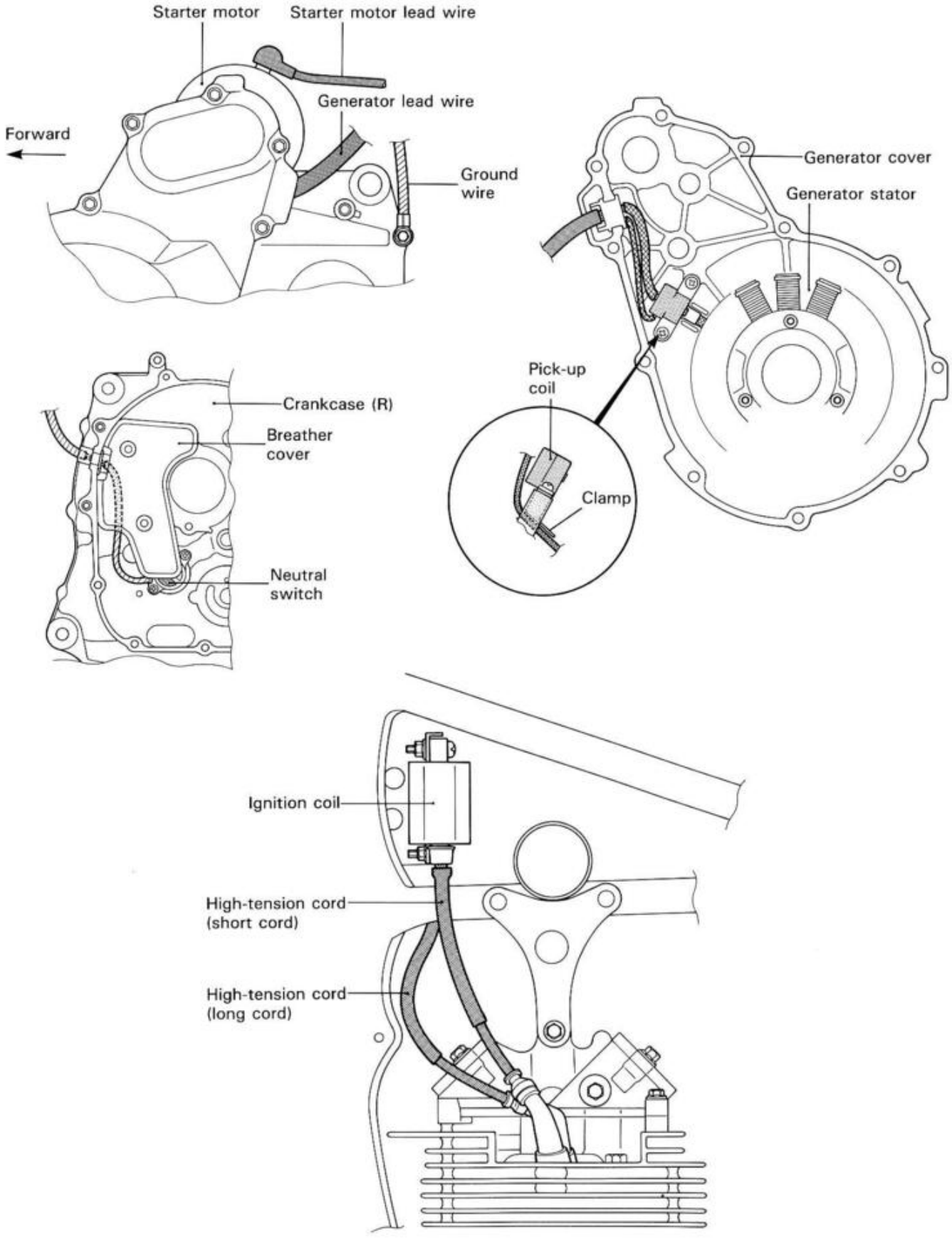
Starter motor
Starter motor lead wire
Generator lead wire
Forward
Ground wire
Generator cover
Generator stator
Pick-up coil
Clamp
Crankcase (R)
Breather cover
Neutral switch
Ignition coil
High-tension cord (short cord)
High-tension cord (long cord)

CABLE ROUTING

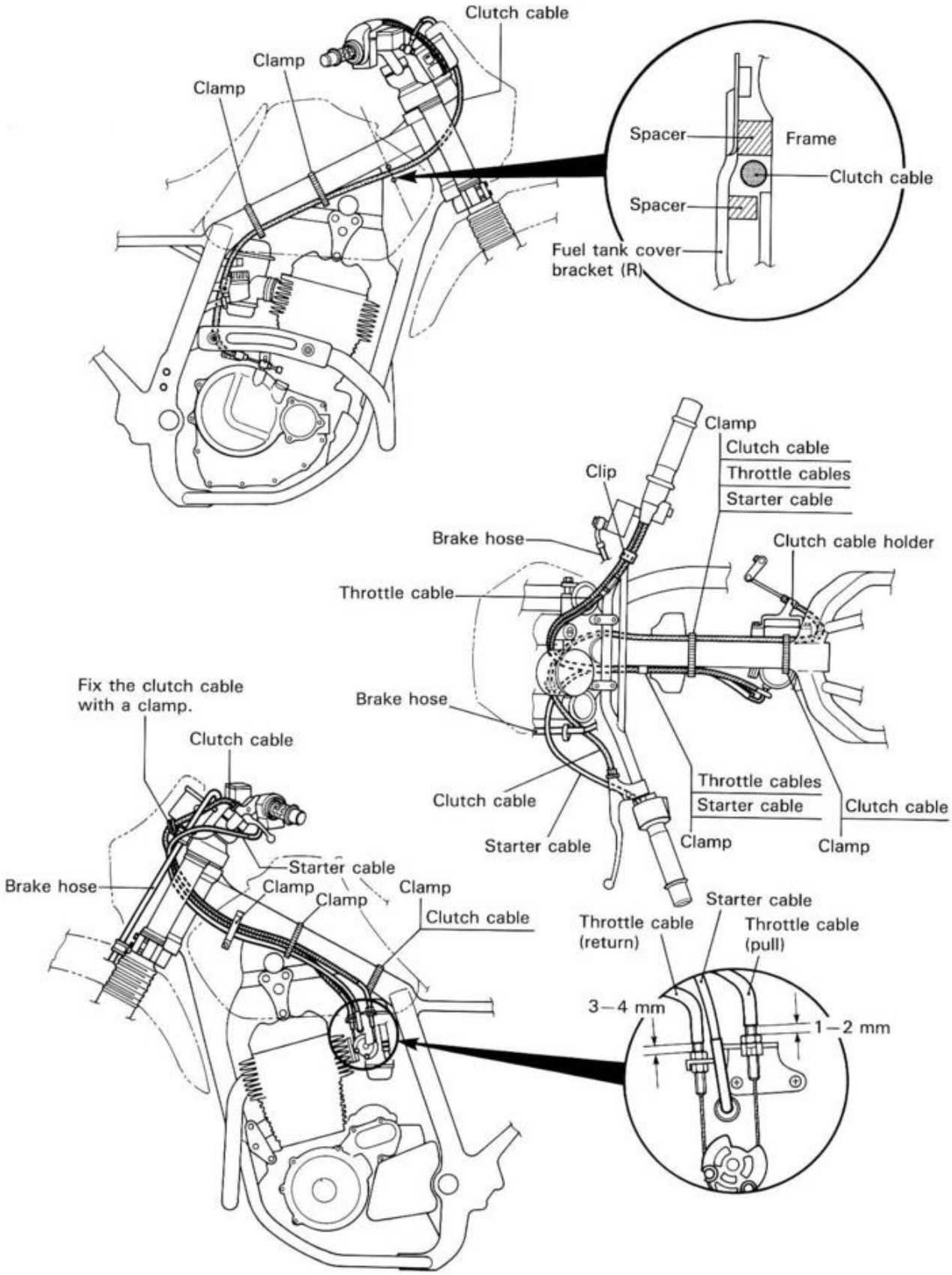

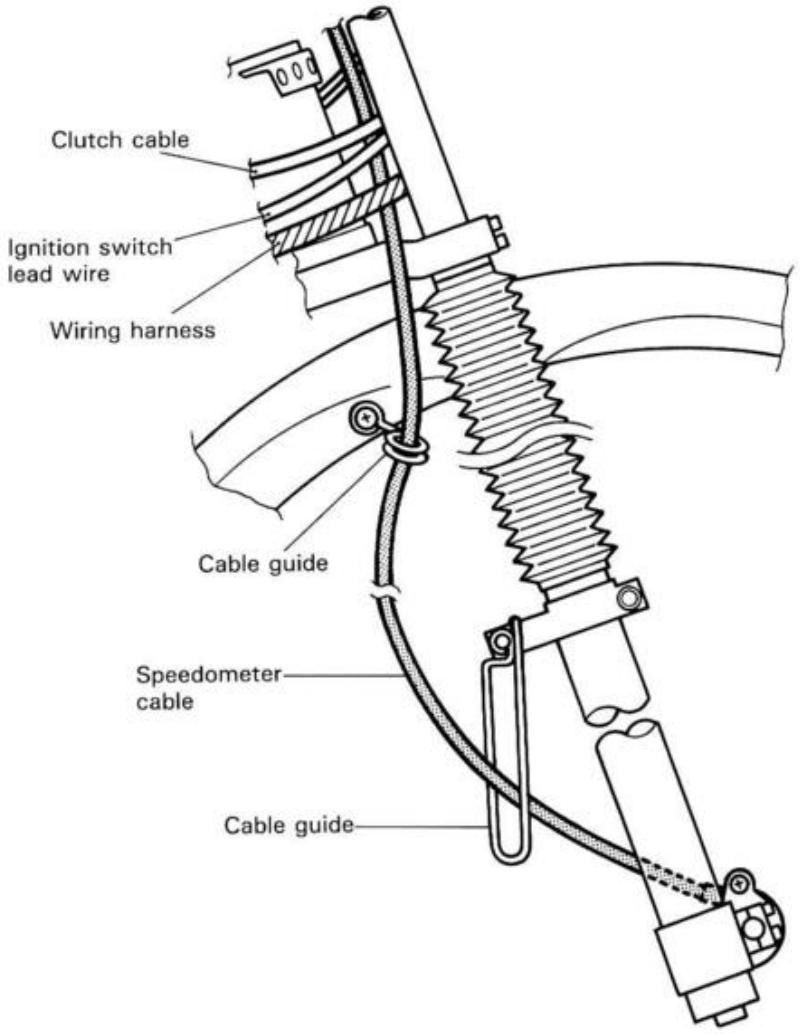
Clutch cable
Ignition switch lead wire
Wiring harness
Cable guide
Speedometer cable
Cable guide

CARBURETOR AND AIR CLEANER HOSE ROUTING

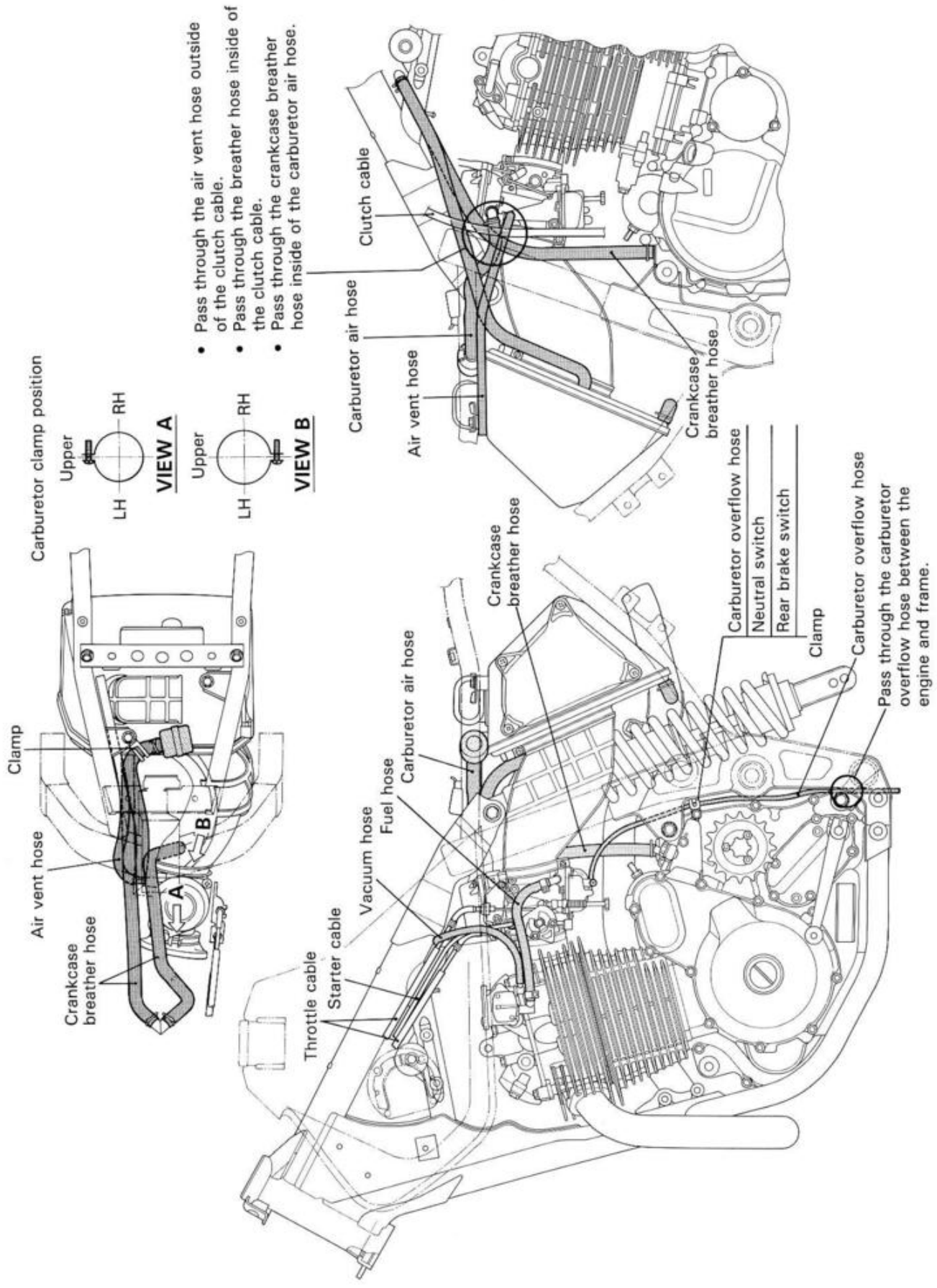

PAIR (AIR SUPPLY) SYSTEM HOSE ROUTING (For Austria and Switzerland)

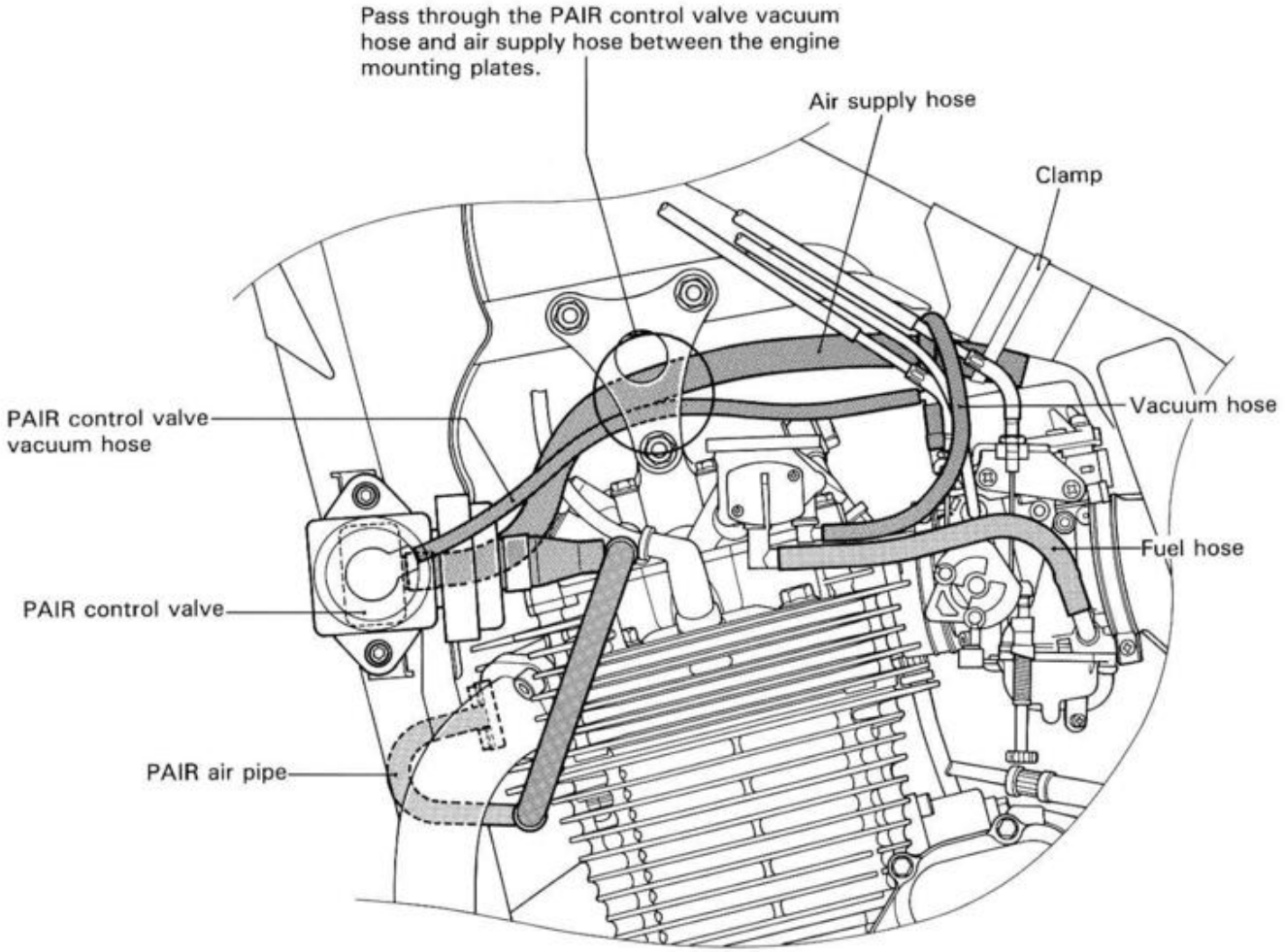
Pass through the PAIR control valve vacuum hose and air supply hose between the engine mounting plates.
Air supply hose
Clamp
PAIR control valve vacuum hose
Vacuum hose
Fuel hose
PAIR control valve
PAIR air pipe

FRONT BRAKE HOSE ROUTING

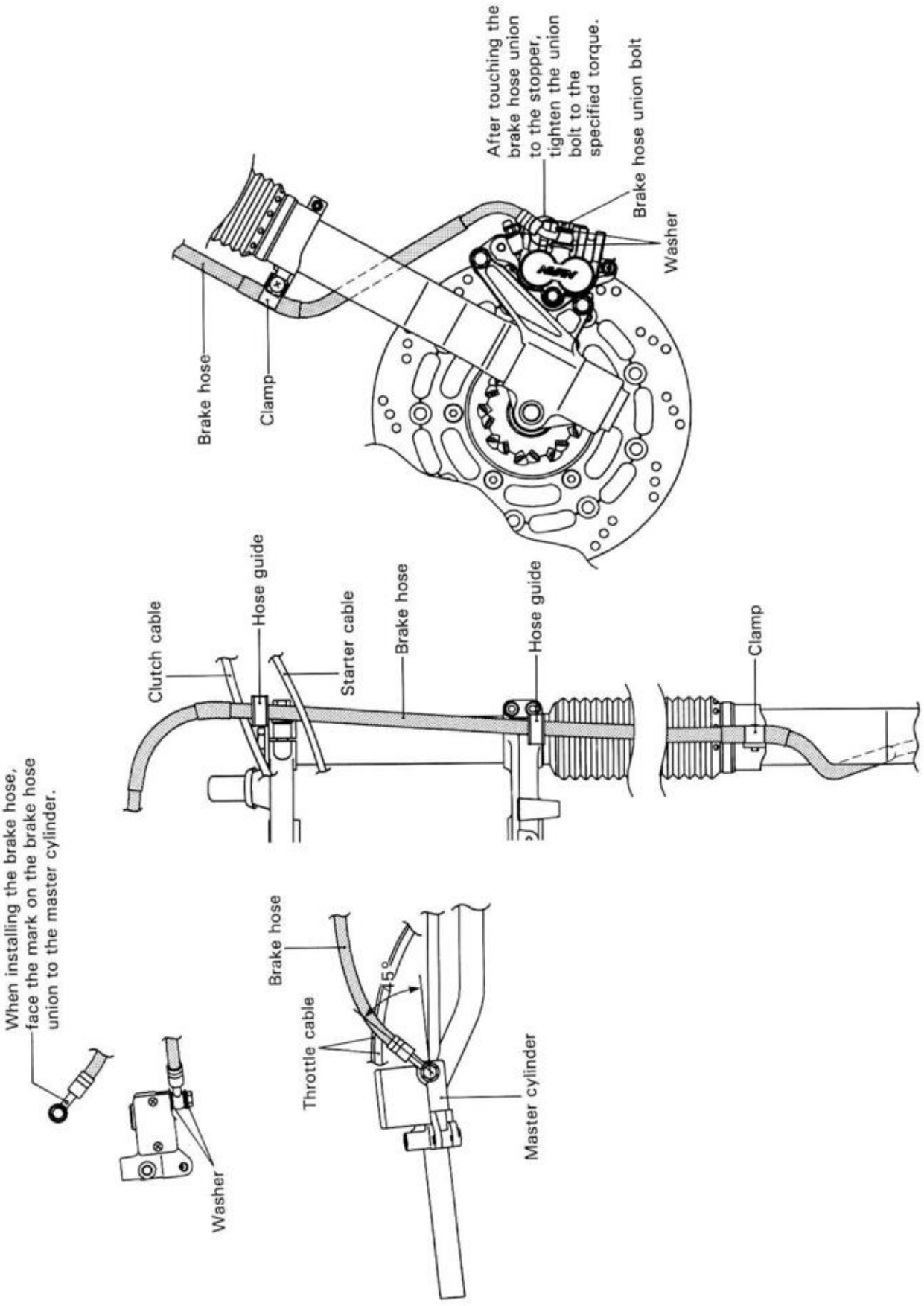

REAR BRAKE HOSE ROUTING

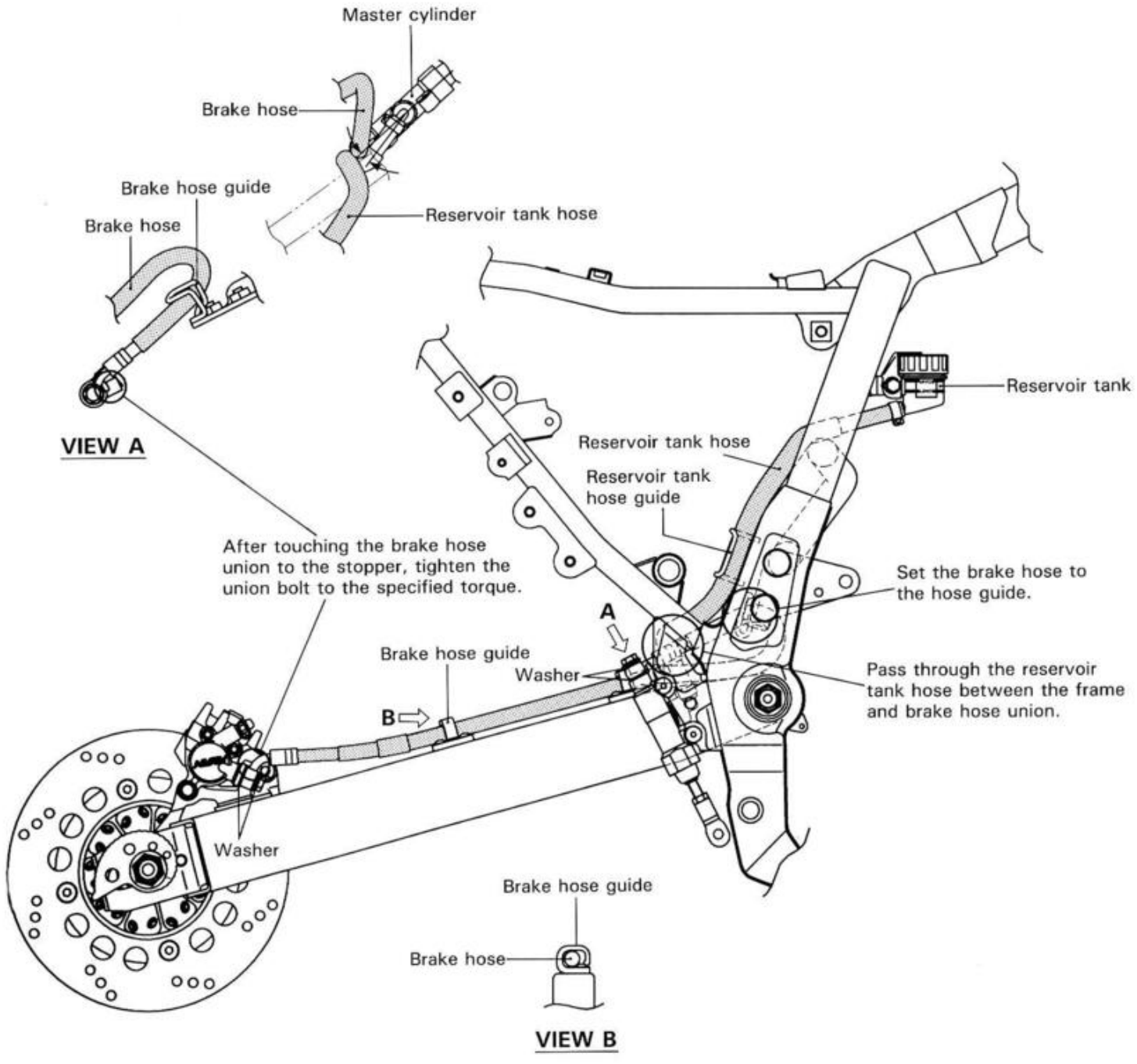

HEAT SHIELD ADHERING

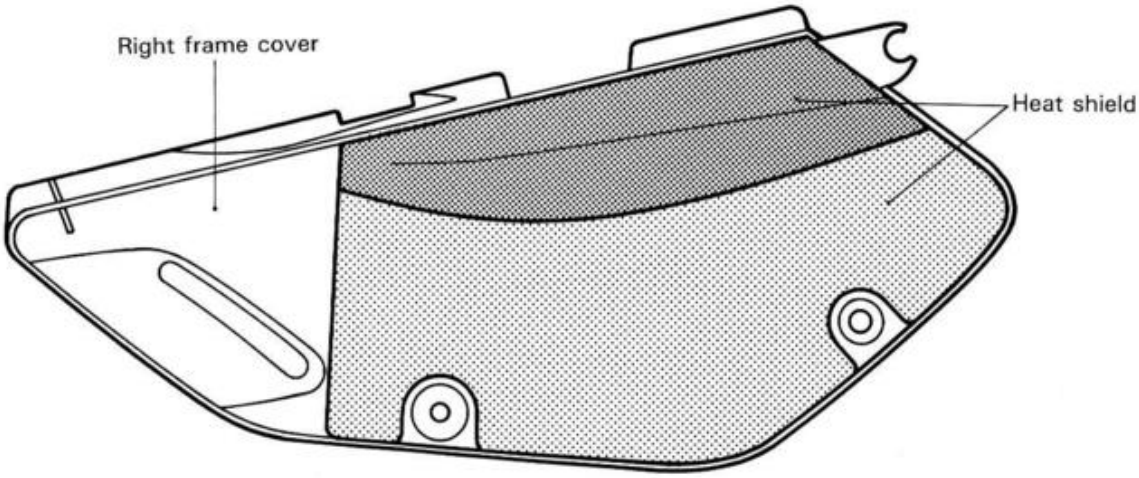

SIDE STAND SPRING SET-UP

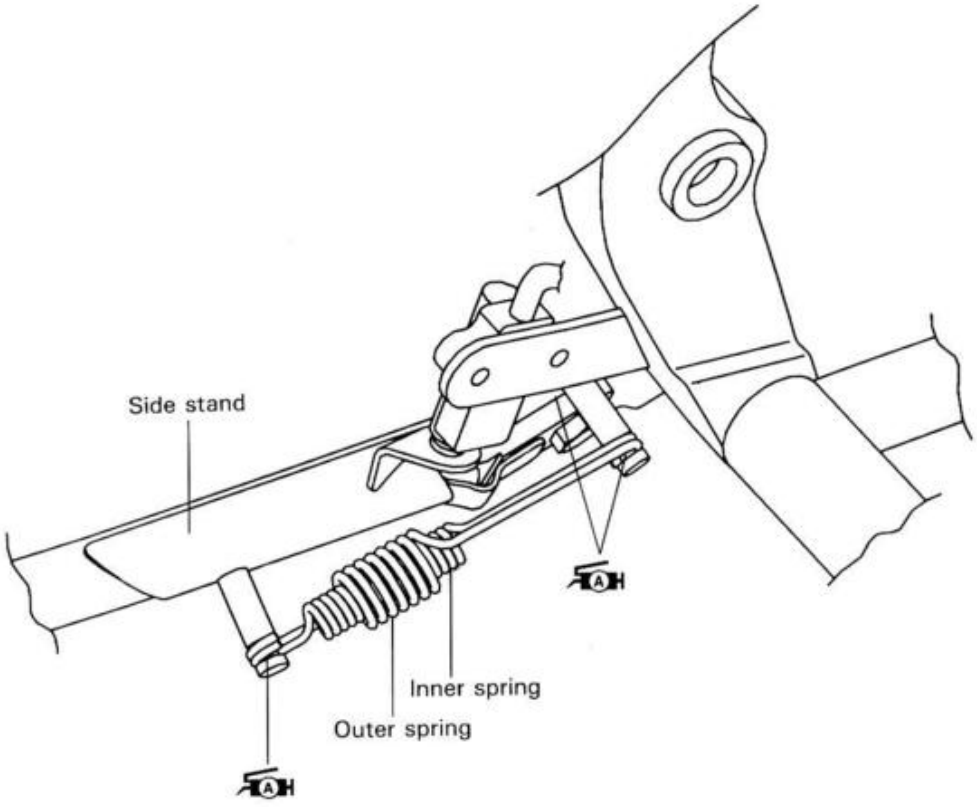

SPECIAL TOOLS

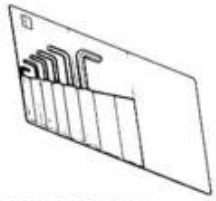 09900-00401 "L" type hexagon wrench set	 09900-00410 Hexagon bit wrench set	 09900-06107 Snap ring pliers	 09900-06108 Snap ring pliers	 09900-09003 Impact driver set
 09900-20102 Vernier calipers	 09900-20202 Micrometer (25—50 mm)	 09900-20204 Micrometer (75—100 mm)	 09900-20205 Micrometer (0—25 mm)	 09900-20508 Cylinder bore gauge set 09900-20513 Gauge rod 94 mm
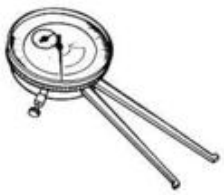 09900-20605 Dial calipers	 09900-20606 Dial gauge (1/100)	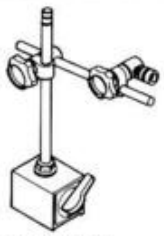 09900-20701 Magnetic stand	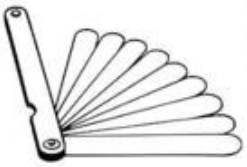 09900-20803 Thickness gauge	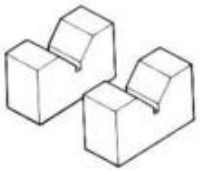 09900-21304 V-block (100 mm)
 09900-22301 Plastigauge	 09900-25002 Pocket tester	 09900-28106 Electro tester	 09910-20116 Conrod holder	 09910-32812 Crankshaft installer
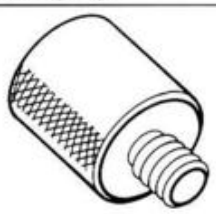 09910-32830 Crankshaft installer attachment	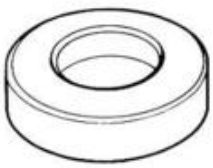 09910-32860 Crankshaft installer attachment	 09910-33210 Attachment	 09910-60611 Universal clamp wrench	 09913-10720 Compression gauge attachment
 09913-50121 Oil seal remover	 09913-60910 Bearing/gear puller	 09913-75810 Bearing installer	 09913-75830 Bearing installer	 09915-64510 Compression gauge

 09915-74510 Oil pressure gauge	 09916-14510 Valve spring compressor	 09916-14910 Valve spring compressor attachment	 09916-20610 Valve seat cutter head 15° (N-121)	 09916-24210 Valve seat cutter head 45° (N-615)
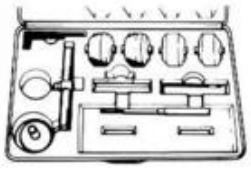 09916-24900	 09916-34550 5.5 mm reamer	 09916-34580 10.8 mm reamer	 09916-44910 Valve guide remover	 09916-84511 Tweezers
 09917-23711 Ring nut socket wrench	 09920-13120 Crankcase separator/ crankshaft remover	 09920-53740 Clutch sleeve hub holder	 09923-73210 Bearing remover	 09923-74510 Bearing remover
 09924-84510 Bearing installer set	 09924-84521 Bearing installer set	 09925-18010 Steering bearing installer	 09930-11920 Torx bit JT40H	 09930-11940 Torx bit holder
 09930-30102 Sliding shaft	 09930-33720 Generator rotor remover	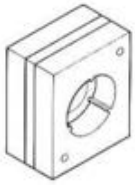 09930-73110 Starter torque limiter holder	 09930-73120 Starter torque limiter socket	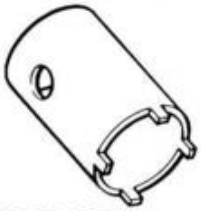 09940-14911 Steering nut socket wrench
 09940-14960 Steering nut wrench socket	 09940-34520 "T" handle	 09940-34592 Attachment G	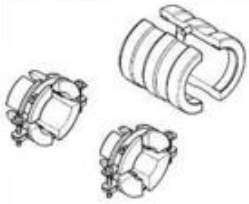 09940-52860 Front fork oil seal installer	 09941-34513 Steering race and swingarm bearing installer

	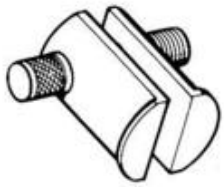		
09941-50111 Wheel bearing remover	09941-54911 Bearing outer race remover	09941-74910 Steering bearing remover	09943-74111 Front fork oil level gauge

TIGHTENING TORQUE

ENGINE

ITEM	N·m	kg-m	lb-ft
Cylinder head cover bolt	10	1.0	7.0
Camshaft sprocket bolt	15	1.5	11.0
Cylinder head bolt	38	3.8	27.5
Cylinder head nut	25	2.5	18.0
Cylinder base nut	10	1.0	7.0
Cam drive chain tensioner fitting bolt	13	1.3	9.5
Generator rotor bolt	160	16.0	115.5
Can drive chain adjuster mounting bolt	10	1.0	7.0
Spark plug	11	1.1	8.0
Crankcase bolt	11	1.1	8.0
T.D.C. plug	23	2.3	16.5
Oil gallery	23	2.3	16.5
Oil nozzle bolt	10	1.0	7.0
Generator cover plug	15	1.5	11.0
Starter clutch bolt	25	2.5	18.0
Primary drive gear nut	100	10.0	72.5
Clutch spring mounting bolt	10	1.0	7.0
Clutch sleeve hub nut	50	5.0	36.0
Gearshift arm stopper	19	1.9	13.5
Engine oil drain plug	23	2.3	16.5
Engine sprocket bolt	6	0.6	4.5
Engine mounting bolt 8 mm Diam.	40	4.0	29.0
Engine mounting bolt 10 mm Diam.	65	6.5	47.0
Engine mounting bracket bolt (Upper and Front)	40	4.0	29.0
(Rear)	23	2.3	16.5
Exhaust pipe bolt	26	2.6	19.0
Muffler mounting bolt	26	2.6	19.0
Crankshaft bearing ring nut	80	8.0	58.0
Engine oil pipe union bolt (Cylinder head)	23	2.3	16.5
(Crankcase)	20	2.0	14.5
Engine oil cooler hose bolt	10	1.0	7.0
Cam drive chain adjuster cap bolt	6	0.6	4.5

CHASSIS

ITEM		N·m	kg-m	lb-ft
Front axle		65	6.5	47.0
Front axle holder nut		10	1.0	7.0
Front fork damper rod bolt		30	3.0	21.5
Front fork lower clamp bolt		26	2.6	19.0
Front fork upper clamp bolt		29	2.9	21.0
Front fork cap bolt		23	2.3	16.5
Steering stem head nut		90	9.0	65.0
Handlebar clamp bolt		23	2.3	16.5
Handlebar holder nut		25	2.5	18.0
Front brake master cylinder mounting bolt		10	1.0	7.0
Front brake caliper mounting bolt		26	2.6	19.0
Brake caliper axle bolt (Front & Rear)		23	2.3	16.5
		13	1.3	9.5
Brake hose union bolt (Front & Rear)		23	2.3	16.5
Brake pad mounting pin (Front & Rear)		18	1.8	13.0
Front brake pad mounting pin plug		2.5	0.25	1.8
Brake air bleeder valve (Front & Rear)		8	0.8	6.0
Brake disc mounting bolt (Front & Rear)		23	2.3	16.5
Swingarm pivot nut		77	7.7	55.5
Front footrest bolt		39	3.9	28.0
Chain roller mounting bolt (Upper & Lower)		40	4.0	29.0
Rear brake master cylinder mounting bolt		10	1.0	7.0
Rear brake rod lock nut		18	1.8	13.0
Rear shock absorber bolt (Upper & Lower)		55	5.5	40.0
Rear cushion lever nut (Front)		80	8.0	58.0
Rear cushion lever nut (Center)		100	10.0	72.5
Rear cushion rod nut		100	10.0	72.5
Rear axle nut	For Canada and U.S.A.	100	10.0	72.5
	For the others	110	11.0	79.5
Rear sprocket mounting nut		27	2.7	19.5
Spoke nipple (Front & Rear)		4.5	0.45	3.0

TIGHTENING TORQUE CHART

For other bolts and nuts listed previously, refer to this chart:

Bolt Diameter Ⓐ (mm)	Conventional or "4" marked bolt			"7" marked bolt		
	N·m	kg-m	lb-ft	N·m	kg-m	lb-ft
4	1.5	0.15	1.0	2.3	0.23	1.5
5	3	0.3	2.0	4.5	0.45	3.0
6	5.5	0.55	4.0	10	1.0	7.0
8	13	1.3	9.5	23	2.3	16.5
10	29	2.9	21.0	50	5.0	36.0
12	45	4.5	32.5	85	8.5	61.5
14	65	6.5	47.0	135	13.5	97.5
16	105	10.5	76.0	210	21.0	152.0
18	160	16.0	115.5	240	24.0	173.5

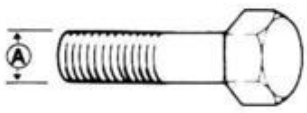

Conventional bolt

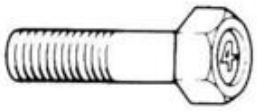

"4" marked bolt

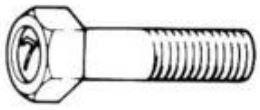

"7" marked bolt

SERVICE DATA

VALVE + GUIDE

Unit: mm (in)

ITEM	STANDARD		LIMIT
Valve diam.	IN.	33 (1.3)	—
	EX.	28 (1.1)	—
Valve clearance (when engine is cold)	IN.	0.08–0.13 (0.003–0.005)	—
	EX.	0.17–0.22 (0.0067–0.0087)	—
Valve guide to valve stem clearance	IN.	0.010–0.037 (0.0004–0.0015)	—
	EX.	0.030–0.057 (0.0012–0.0022)	—
Valve stem deflection	IN. & EX.	—	0.35 (0.014)
Valve guide I.D.	IN. & EX.	5.500–5.512 (0.2165–0.2170)	—
Valve stem O.D.	IN.	5.475–5.490 (0.2156–0.2161)	—
	EX.	5.455–5.470 (0.2148–0.2154)	—
Valve stem runout	IN. & EX.	—	0.05 (0.002)
Valve head thickness	IN. & EX.	—	0.5 (0.02)
Valve stem end length	IN. & EX.	—	2.7 (0.11)
Valve seat width	IN. & EX.	0.9–1.1 (0.035–0.043)	—
Valve head radial runout	IN. & EX.	—	0.03 (0.001)
Valve spring free length (IN. & EX.)	INNER	—	34.4 (1.35)
	OUTER	—	38.1 (1.50)
Valve spring tension (IN. & EX.)	INNER	5.9–6.7 kg (13.0–14.8 lbs) at length 27.5 mm (1.1 in)	—
	OUTER	13.8–15.8 kg (30.4–34.8 lbs) at length 31.0 mm (1.2 in)	—

CAMSHAFT + CYLINDER HEAD

Unit: mm (in)

ITEM	STANDARD		LIMIT
Cam height	IN.	33.710–33.750 (1.3272–1.3287)	33.410 (1.3154)
	EX.	33.700–33.740 (1.3268–1.3283)	33.400 (1.3150)
Camshaft journal oil clearance	Right & Center	0.032–0.066 (0.0013–0.0026)	0.150 (0.0059)
	Left	0.028–0.059 (0.0011–0.0023)	0.150 (0.0059)
Camshaft journal holder I.D.	Right & Center	22.012–22.025 (0.8666–0.8671)	—
	Left	17.512–17.525 (0.6894–0.6900)	—
Camshaft journal O.D.	Right & Center	21.959–21.980 (0.8645–0.8654)	—
	Left	17.466–17.484 (0.6877–0.6883)	—
Camshaft runout	—		0.10 (0.004)
Rocker arm I.D.	IN. & EX.	12.000–12.018 (0.4724–0.4731)	—
Rocker arm shaft O.D.	IN. & EX.	11.973–11.984 (0.4714–0.4718)	—
Cylinder head distortion	—		0.05 (0.002)
Cylinder head cover distortion	—		0.05 (0.002)

CYLINDER + PISTON + PISTON RING

Unit: mm (in)

ITEM	STANDARD			LIMIT
Piston to cylinder clearance	0.020–0.030 (0.0008–0.0012)			0.120 (0.0047)
Cylinder bore	100.000–100.015 (3.937–3.9376)			Nicks or Scratches
Piston diam.	99.975–99.990 (3.9360–3.9366) Measure at 21 mm (0.8 in) from the skirt end.			99.880 (3.9323)
Cylinder distortion	—			0.05 (0.002)
Piston ring free end gap	1st	R	Approx. 13.5 (0.53)	10.8 (0.43)
	2nd	R	Approx. 11.4 (0.45)	9.1 (0.36)
Piston ring end gap	1st		0.30–0.45 (0.012–0.018)	0.50 (0.020)
	2nd		0.45–0.60 (0.018–0.024)	1.00 (0.039)
Compression pressure (Automatic decomp. actuated)	Approx. 850 kPa (8.5 kg/cm², 120 psi)			—

ITEM	STANDARD		LIMIT
Piston ring to groove clearance	1st	—	0.180 (0.0071)
	2nd	—	0.150 (0.0059)
Piston ring groove width	1st	1.230—1.250 (0.048—0.049)	—
	2nd	1.210—1.230 (0.047—0.048)	—
	Oil	2.810—2.830 (0.110—0.111)	—
Piston ring thickness	1st	1.170—1.190 (0.0461—0.0469)	—
	2nd	1.150—1.170 (0.0453—0.0461)	—
Piston pin bore	23.002—23.008 (0.9056—0.9058)		23.030 (0.9067)
Piston pin O.D.	22.996—23.000 (0.9054—0.9055)		22.980 (0.9047)

CONROD + CRANKSHAFT

Unit: mm (in)

ITEM	STANDARD	LIMIT
Conrod small end I.D.	23.006—23.014 (0.9057—0.9061)	23.040 (0.9071)
Conrod deflection	—	3.0 (0.12)
Conrod big end side clearance	0.10—0.65 (0.004—0.026)	1.00 (0.039)
Conrod big end width	24.95—25.00 (0.982—0.984)	—
Crankshaft runout	—	0.05 (0.002)
Crank web to web width	71.0 ± 0.1 (2.795 ± 0.004)	—

OIL PUMP

ITEM	STANDARD	LIMIT
Oil pump reduction ratio	1.633 (61/28 x 30/20 x 15/30)	—
Oil pressure (at 60°C,140°F)	Above 30 kPa (0.3 kg/cm², 4.3 psi) Below 70 kPa (0.7 kg/cm², 10.0 psi) at 3 000 r/min.	—

CLUTCH

Unit: mm (in)

ITEM	STANDARD		LIMIT
Clutch lever play	10—15 (0.4—0.6)		—
Drive plate thickness	No.1 & No.2	2.9—3.1 (0.11—0.12)	2.6 (0.10)
Driven plate distortion	—		0.10 (0.004)
Clutch spring free length	—		33.0 (1.30)

TRANSMISSION + DRIVE CHAIN

Unit: mm (in) Except ratio

ITEM		STANDARD		LIMIT
Primary reduction ratio		2.178 (61/28)		—
Final reduction ratio	E-03,28,33	2.800 (42/15)		—
	The others	2.733 (41/15)		—
Gear ratios	Low	2.416 (29/12)		—
	2nd	1.625 (26/16)		—
	3rd	1.238 (26/21)		—
	4th	1.000 (21/21)		—
	Top	0.826 (19/23)		—
Shift fork to groove clearance		0.10—0.30 (0.004—0.012)		0.50 (0.020)
Shift fork groove width		5.0—5.1 (0.197—0.200)		—
Shift fork thickness		4.8—4.9 (0.189—0.193)		—
Drive chain		Type	DAIDO:DID525V9	—
		Links	110	—
		20-pitch length	—	319.4 (12.57)
Drive chain slack		30—45 (1.2—1.8)		—

CARBURETOR

ITEM		SPECIFICATION			
		E-03	E-33	E-28	E-18
Carburetor type		MIKUNI BST40SS	←	←	←
Bore size		40 mm	←	←	←
I.D. No.		32E1	32E6	32E5	32E2
Idle r/min.		1 500 ± 100 r/min.	←	←	1 500 ± 50 r/min.
Float height		14.7 ± 1.0 mm (0.58 ± 0.04 in)	←	←	←
Main jet	(M.J.)	#140	←	#140	#137.5
Jet needle	(J.N.)	6F23	←	6F19-3rd	6H21-4th
Needle jet	(N.J.)	Y-5M	←	Y-5	←
Throttle valve	(Th.V.)	#95	←	←	←
Pilot jet	(P.J.)	#42.5	←	#42.5	←
Starter jet	(G.S.)	#40	←	←	←
Pilot screw	(P.S.)	PRE-SET	←	PRE-SET (1½ turns back)	PRE-SET (1.0 turn back)
Throttle cable play (pulling cable)		0.5—1.0 mm (0.02—0.04 in)	←	←	←
Starter cable play		0.5—1.0 mm (0.02—0.04 in)	←	←	←

CARBURETOR

ITEM		SPECIFICATION			
		E-02,04,34	E-37	E-17,22,24	U-type E-22
Carburetor type		MIKUNI BST40SS	←	←	←
Bore size		40 mm	←	←	←
I.D. No.		32E0	32E8	32E3	32E4
Idle r/min.		1 500 ± 100 r/min.	←	←	←
Float height		14.7 ± 1.0 mm (0.58 ± 0.04 in)	←	←	←
Main jet	(M.J.)	#140	←	←	←
Jet needle	(J.N.)	6F19-3rd	←	←	←
Needle jet	(N.J.)	Y-5	←	←	←
Throttle valve	(Th.V.)	#95	←	←	←
Pilot jet	(P.J.)	#42.5	←	←	←
Starter jet	(G.S.)	#40	←	←	←
Pilot screw	(P.S.)	PRE-SET (1½ turns back)	←	PRE-SET (1.0 turn back)	PRE-SET (1⅛ turns back)
Throttle cable play (pulling cable)		0.5—1.0 mm (0.02—0.04 in)	←	←	←
Starter cable play		0.5—1.0 mm (0.02—0.04 in)	←	←	←

ELECTRICAL

Unit: mm (in)

ITEM		SPECIFICATION		NOTE
Ignition timing		10° B.T.D.C. at 1 500 r/min.		
Spark plug		Type	ND.: U31ESR-N N.G.K.: CR10E	
		Gap	0.7—0.8 (0.028—0.031)	
Spark performance		Over 8 (0.3) at 1 atm.		
Ignition coil resistance		Primary	0.07—0.12 Ω	B—B/W
		Secondary	23—25 kΩ	Plug cap—Plug cap
Generator coil resistance		Charging	0.5—0.9 Ω	Y—Y
		Power source	0.1—0.2 Ω	B—W
		Pick-up	170—256 Ω	Bl—G
Generator no-load voltage		More than 75 V(AC) at 5 000 r/min.		
Generator Max. output		Approx. 200W at 5 000 r/min.		
Regulated voltage		13.0—16.0 V at 5 000 r/min.		
Starter relay resistance		3—5 Ω		
Battery	Type designation	YTX9-BS		
	Capacity	12V 28.8 kC (8Ah)/10 HR		
	Standard electrolyte S.G.	1.320 at 20°C (68°F)		
Fuse size	Main	30 A		
	Headlight (H)	10 A		
	Headlight (L)	10 A		

WATTAGE

Unit:W

ITEM		SPECIFICATION	
		E-03,24,28,33	The others
Headlight	HI	60	←
	LO	55	←
Parking or position light			4
Tail/Brake light		5/21	←
Turn signal light		21	←
Speedometer light		3	←
Turn signal indicator light		2	←
High beam indicator light		2	←
Neutral indicator light		2	←
License light		5	←

BRAKE + WHEEL

Unit: mm (in)

ITEM		STANDARD	LIMIT
Rear brake pedal height		5 (0.2)	———
Brake disc thickness	Front	4.0 ± 0.2 (0.157 ± 0.008)	3.5 (0.14)
	Rear	4.5 ± 0.2 (0.177 ± 0.008)	4.0 (0.16)
Brake disc runout		———	0.30 (0.012)

ITEM	STANDARD		LIMIT
Master cylinder bore	Front	12.700–12.743 (0.5000–0.5017)	—
	Rear	12.700–12.743 (0.5000–0.5017)	—
Master cylinder piston diam.	Front	12.657–12.684 (0.4983–0.4994)	—
	Rear	12.657–12.684 (0.4983–0.4994)	—
Brake caliper cylinder bore	Front	27.000–27.050 (1.0630–1.0650)	—
	Rear	30.23–30.28 (1.1902–1.1921)	—
Brake caliper piston diam.	Front	26.90–26.95 (1.0591–1.0610)	—
	Rear	30.16–30.18 (1.1874–1.1882)	—
Wheel rim runout	Axial	—	2.0 (0.08)
	Radial	—	2.0 (0.08)
Wheel axle runout	Front	—	0.25 (0.010)
	Rear	—	0.25 (0.010)
Tire rim size	Front	21 × 1.85	—
	Rear	17 × MT2.50	—
Tire size	Front	90/90-21 54S	—
	Rear	120/90-17 64S	—
Tire tread depth	Front	—	3.0 (0.12)
	Rear	—	3.0 (0.12)

SUSPENSION

Unit: mm (in)

ITEM	STANDARD	LIMIT	NOTE
Front fork stroke	260 (10.2)	—	
	220 (8.7)	—	Low seat
Front fork spring free length	—	548 (21.6)	
Front fork oil level	164 (6.5)	—	
	150 (5.9)	—	Low seat

ITEM	STANDARD	LIMIT	NOTE
Rear shock absorber spring pre-set length	247.5 (9.74)	—	
Rear wheel travel	260 (10.2)	—	
	220 (8.7)	—	Low seat
Swingarm pivot shaft runout	—	0.3 (0.01)	

TIRE PRESSURE

COLD INFLATION TIRE PRESSURE	SOLO RIDING			DUAL RIDING		
	kPa	kg/cm²	psi	kPa	kg/cm²	psi
FRONT	150	1.50	22	175	1.75	25
REAR	175	1.75	25	200	2.00	29

FUEL + OIL

ITEM	SPECIFICATION		NOTE
Fuel type	Use only unleaded gasoline of at least 87 pump octane ($\frac{R+M}{2}$) or 91 octane or higher rated by the research method. Gasoline containing MTBE (Methyl Tertiary Butyl Ether), less than 10% ethanol, or less than 5% methanol with appropriate cosolvents and corrosion inhibitor is permissible.		E-03,33
	Use only unleaded gasoline of at least 87 pump octane ($\frac{R+M}{2}$ method) or 91 octane or higher rated by the Research Method.		E-28
	Gasoline used should be graded 85-95 octane or higher. An unleaded gasoline is recommended.		The others
Fuel tank including reserve	12 L (3.2/2.6 US/Imp gal)		E-33
	13 L (3.4/2.9 US/Imp gal)		The others
reserve	3.0 L (0.8/0.7 US/Imp gal)		
Engine oil type	SAE 10W/40, API SE, SF or SG		
Engine oil capacity	Change	2 300 ml (2.4/2.0 US/Imp qt)	
	Filter change	2 400 ml (2.5/2.1 US/Imp qt)	
	Overhaul	2 600 ml (2.7/2.3 US/Imp qt)	
Front fork oil type	Fork oil #10		
Front fork oil capacity (each leg)	565 ml (19.1/19.9 US/Imp oz)		
	563 ml (19.0/19.8 US/Imp oz)		Low seat
Brake fluid type	DOT 4		

IMPORTANT NOTICE !

If this manual was not purchased from manualcd then you will be missing important pages and also have some features locked. To insure you have the complete manual only buy from manualcd

If this manual was not purchased from manualcd please contact us and we will inform you of what pages are missing and which features are locked.

manualcd@hotmail.com

EMISSION CONTROL INFORMATION

CONTENTS

EMISSION CONTROL CARBURETOR COMPONENTS 8- 1
EVAPORATIVE EMISSION CONTROL SYSTEM 8- 2
CANISTER HOSE ROUTING 8- 3

EMISSION CONTROL CARBURETOR COMPONENTS

DR650SE motorcycles are equipped with precision, manufactured carburetors for emission level control. These carburetors require special mixture control components and other precision adjustments to function properly.

There are several carburetor mixture control components in each carburetor assembly. Three (3) of these components are machined to much closer tolerances than standard machined carburetor jets. These three (3) particular jets—MAIN JET, NEEDLE JET, PILOT JET—must not be replaced by standard jets. To aid in identifying these three (3) jets a different design of letter and number are used. If replacement of these close tolerance jets becomes necessary, be sure to replace them with the same type close tolerance jets marked as in the examples shown below.

The jet needle is also of special manufacture. Only one clip position is provided on the jet needle. If replacement becomes necessary the jet needle may only be replaced with an equivalent performing replacement component. Suzuki recommends that Genuine Suzuki Parts be utilized whenever possible for the best possible performance and durability.

Conventional Figures Used on Standard Tolerance Jet Components	1 2 3 4 5 6 7 8 9 0
Emission Type Figures Used on Close Tolerance Jet Components	1 2 3 4 5 6 7 8 9 0

The carburetor specifications for the emission-controlled DR650SE are as follows.

Carburetor I.D. No.	Main Jet	Needle Jet	Jet Needle	Pilot Jet	Pilot Screw
32E6 (California model only)	#140	Y-5M	6F23	#42.5	PRE-SET
32E1					

Adjusting, interferring with, improper replacement, or resetting of any of the carburetor components may adversely affect carburetor performance and cause the motorcycle to exceed the exhaust emission level limits. If unable to effect repairs, contact the distributors representative for further technical information and assistance.

EVAPORATIVE EMISSION CONTROL SYSTEM
(California model only)

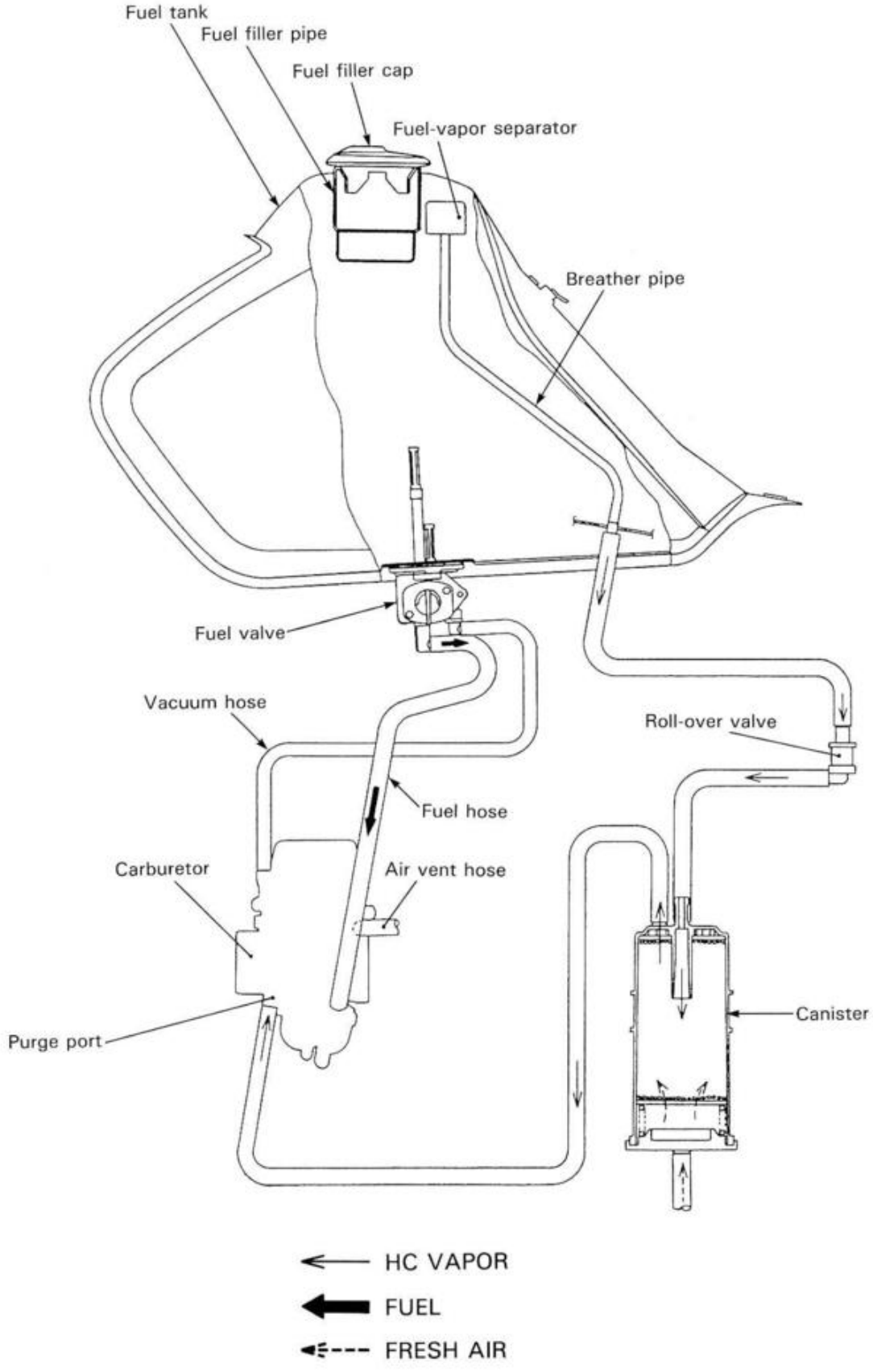

CANISTER HOSE ROUTING
(California model only)

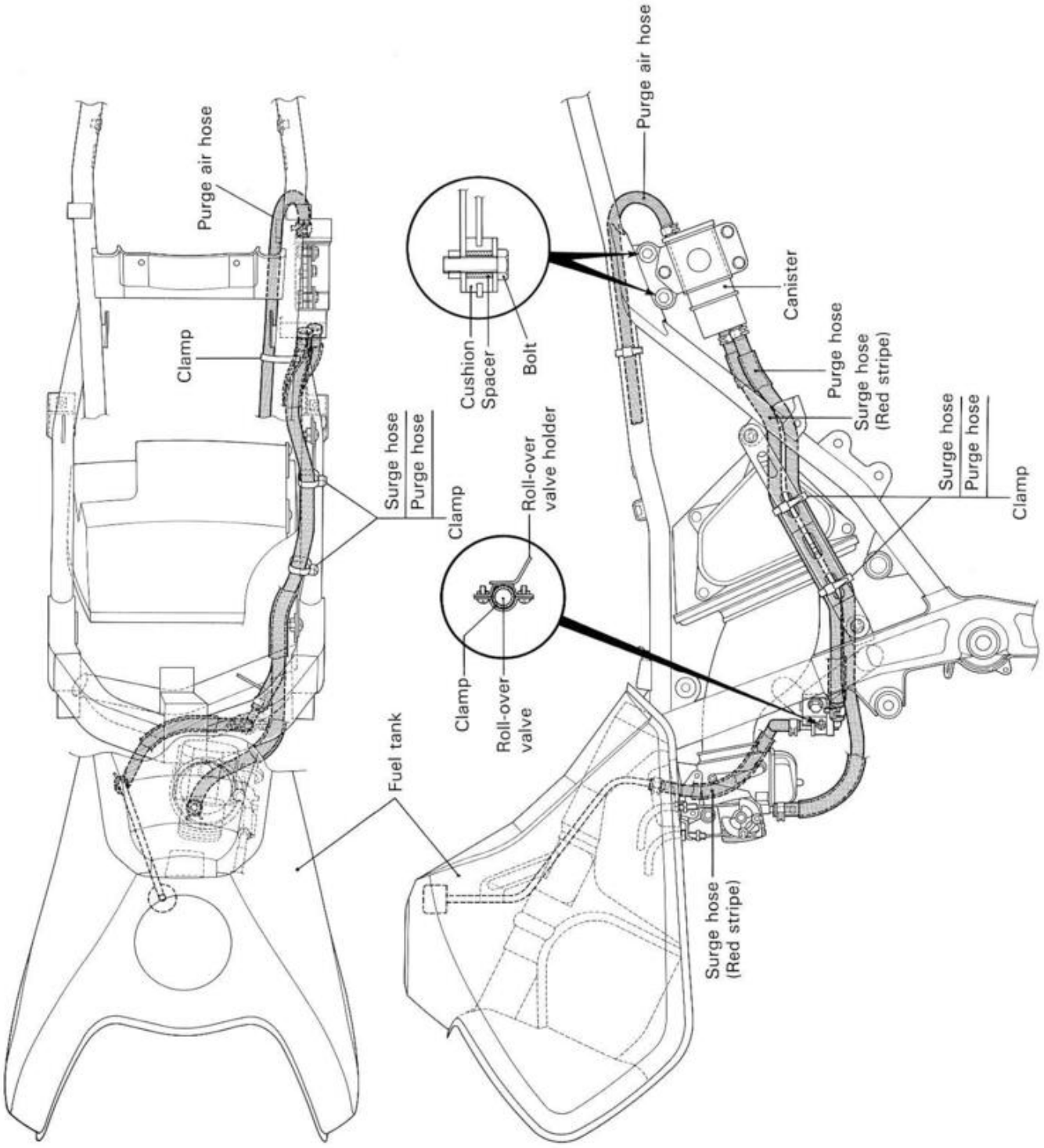

DR650SEV/W/X/Y ('97/'98/'99/'00-MODEL)

CONTENTS

SPECIFICATIONS 9- 1
SERVICE DATA 9- 3
WIRING DIAGRAM 9-11

9

SPECIFICATIONS

DIMENSIONS AND DRY MASS

Overall length	2 345 mm (92.3 in) E-17, 18, 22
	2 325 mm (91.5 in) ..... E-17, 18, 22 (Low seat)
	2 255 mm (88.8 in) ..... Others
	2 235 mm (88.0 in) ..... Others (Low seat)
Overall width	865 mm (34.1 in)
Overall height	1 205 mm (47.4 in)
	1 165 mm (45.9 in) ..... (Low seat)
Wheelbase	1 490 mm (58.7 in)
	1 475 mm (58.1 in) ..... (Low seat)
Ground clearance	265 mm (10.4 in)
	225 mm (8.9 in) ..... (Low seat)
Seat height	885 mm (34.8 in)
	845 mm (33 in) ..... (Low seat)
Dry mass	147 kg (324 lbs)

ENGINE

Type	Four-stroke, air-cooled, with SACS, OHC
Valve clearance (IN)	0.08–0.13 mm (0.003–0.005 in)
(EX)	0.17–0.22 mm (0.007–0.009 in)
Number of cylinders	1
Bore	100 mm (3.937 in)
Stroke	82 mm (3.228 in)
Piston displacement	644 cm^3 (39.3 cu. in)
Compression ratio	9.5 : 1
Carburetor	BST40, single
Air cleaner	Polyurethane foam element
Starter system	Electric
Lubrication system	Wet sump

TRANSMISSION

Clutch	Wet multi-plate type
Transmission	5-speed constant mesh
Gearshift pattern	1-down, 4-up
Primary reduction ratio	2.178 (61/28)
Gear ratios, Low	2.416 (29/12)
2nd	1.625 (26/16)
3rd	1.238 (26/21)
4th	1.000 (21/21)
Top	0.826 (19/23)
Final reduction ratio	2.800 (42/15) E-03, 28, 33
	2.733 (41/15) ..... Others
Drive chain	DID525 V9, 110 links

CHASSIS

Front suspension	Telescopic, coil spring, oil damped
Rear suspension	Link type, coil spring, gas/oil damped, spring pre-load fully adjustable, compression damping force adjustable
Front fork stroke	260 mm (10.2 in)
	220 mm (8.7 in) ..... (Low seat)
Rear wheel travel	260 mm (10.2 in)
	220 mm (8.7 in) ..... (Low seat)
Steering angle	43°
Caster	28° 30'
Trail	111 mm (4.37 in)
Turning radius	2.5 m (8.2 ft)
Front brake	Disc brake
Rear brake	Disc brake
Front tire size	90/90-21 54S, tube type
Rear tire size	120/90-17 64S, tube type

ELECTRICAL

Ignition type	Electronic ignition (CDI)
Ignition timing	10° B.T.D.C. at 1 500 rpm
Spark plug	NGK CR10E or DENSO U31ESR-N
Battery	12V 28.8 kC (8 Ah)/10 HR
Generator	Three-phase A.C. generator
Fuse	30/10/10A
Headlight	12V 60/55W
Parking or city light	12V 4W ..... except E-03, 24, 28, 33
Turn signal light	12V 21W
Brake light/Taillight	12V 21/5W
License plate light	12V 5W
Speedometer light	12V 3W
Neutral indicator light	12V 2W
High beam indicator light	12V 2W
Turn signal indicator light	12V 2W

CAPACITIES

Fuel tank, including reserve	12.0 L (3.2/2.6 US/Imp gal) E-33
	13.0 L (3.4/2.9 US/Imp gal) ..... Others
reserve	3.0 L (0.8/0.7 US/Imp gal)
Engine oil, oil change	2 300 ml (2.4/2.0 US/Imp qt)
with filter change	2 400 ml (2.5/2.1 US/Imp qt)
overhaul	2 600 ml (2.7/2.3 US/Imp qt)
Front fork oil (each leg)	565 ml (19.1/19.9 US/Imp oz)
	563 ml (19.0/19.8 US/Imp oz) ..... (Low seat)

SERVICE DATA

VALVE + GUIDE

Unit: mm (in)

ITEM	STANDARD		LIMIT
Valve diam.	IN.	33 (1.3)	—
	EX.	28 (1.1)	—
Valve clearance (when engine is cold)	IN.	0.08—0.13 (0.003—0.005)	—
	EX.	0.17—0.22 (0.0067—0.0087)	—
Valve guide to valve stem clearance	IN.	0.010—0.037 (0.0004—0.0015)	—
	EX.	0.030—0.057 (0.0012—0.0022)	—
Valve stem deflection	IN. & EX.	—	0.35 (0.014)
Valve guide I.D.	IN. & EX.	5.500—5.512 (0.2165—0.2170)	—
Valve stem O.D.	IN.	5.475—5.490 (0.2156—0.2161)	—
	EX.	5.455—5.470 (0.2148—0.2154)	—
Valve stem runout	IN. & EX.	—	0.05 (0.002)
Valve head thickness	IN. & EX.	—	0.5 (0.02)
Valve stem end length	IN. & EX.	—	2.7 (0.11)
Valve seat width	IN. & EX.	0.9—1.1 (0.035—0.043)	—
Valve head radial runout	IN. & EX.	—	0.03 (0.001)
Valve spring free length (IN. & EX.)	INNER	—	34.4 (1.35)
	OUTER	—	38.1 (1.50)
Valve spring tension (IN. & EX.)	INNER	5.9—6.7 kg (13.0—14.8 lbs) at length 27.5 mm (1.1 in)	—
	OUTER	13.8—15.8 kg (30.4—34.8 lbs) at length 31.0 mm (1.2 in)	—

CAMSHAFT + CYLINDER HEAD

Unit: mm (in)

ITEM	STANDARD		LIMIT
Cam height	IN.	33.710—33.750 (1.3272—1.3287)	33.410 (1.3154)
	EX.	33.700—33.740 (1.3268—1.3283)	33.400 (1.3150)
Camshaft journal oil clearance	Right & Center	0.032—0.066 (0.0013—0.0026)	0.150 (0.0059)
	Left	0.028—0.059 (0.0011—0.0023)	0.150 (0.0059)
Camshaft journal holder I.D.	Right & Center	22.012—22.025 (0.8666—0.8671)	—
	Left	17.512—17.525 (0.6894—0.6900)	—
Camshaft journal O.D.	Right & Center	21.959—21.980 (0.8645—0.8654)	—
	Left	17.466—17.484 (0.6877—0.6883)	—
Camshaft runout	—		0.10 (0.004)
Rocker arm I.D.	IN. & EX.	12.000—12.018 (0.4724—0.4731)	—
Rocker arm shaft O.D.	IN. & EX.	11.973—11.984 (0.4714—0.4718)	—
Cylinder head distortion	—		0.05 (0.002)
Cylinder head cover distortion	—		0.05 (0.002)

CYLINDER + PISTON + PISTON RING

Unit: mm (in)

ITEM	STANDARD			LIMIT
Piston to cylinder clearance	0.020—0.030 (0.0008—0.0012)			0.120 (0.0047)
Cylinder bore	100.000—100.015 (3.937—3.9376)			Nicks or Scratches
Piston diam.	99.975—99.990 (3.9360—3.9366) Measure at 21 mm (0.8 in) from the skirt end.			99.880 (3.9323)
Cylinder distortion	—			0.05 (0.002)
Piston ring free end gap	1st	R	Approx. 13.5 (0.53)	10.8 (0.43)
	2nd	R	Approx. 11.4 (0.45)	9.1 (0.36)
Piston ring end gap	1st		0.30—0.45 (0.012—0.018)	0.50 (0.020)
	2nd		0.45—0.60 (0.018—0.024)	1.00 (0.039)
Compression pressure (Automatic decomp. actuated)	Approx. 850 kPa (8.5 kg/cm², 120 psi)			—

ITEM	STANDARD		LIMIT
Piston ring to groove clearance	1st	—	0.180 (0.0071)
	2nd	—	0.150 (0.0059)
Piston ring groove width	1st	1.230–1.250 (0.048–0.049)	—
	2nd	1.210–1.230 (0.047–0.048)	—
	Oil	2.810–2.830 (0.110–0.111)	—
Piston ring thickness	1st	1.170–1.190 (0.0461–0.0469)	—
	2nd	1.150–1.170 (0.0453–0.0461)	—
Piston pin bore	23.002–23.008 (0.9056–0.9058)		23.030 (0.9067)
Piston pin O.D.	22.996–23.000 (0.9054–0.9055)		22.980 (0.9047)

CONROD + CRANKSHAFT

Unit: mm (in)

ITEM	STANDARD	LIMIT
Conrod small end I.D.	23.006–23.014 (0.9057–0.9061)	23.040 (0.9071)
Conrod deflection	—	3.0 (0.12)
Conrod big end side clearance	0.10–0.65 (0.004–0.026)	1.00 (0.039)
Conrod big end width	24.95–25.00 (0.982–0.984)	—
Crankshaft runout	—	0.05 (0.002)
Crank web to web width	71.0 ± 0.1 (2.795 ± 0.004)	—

OIL PUMP

ITEM	STANDARD	LIMIT
Oil pump reduction ratio	1.633 (61/28 x 30/20 x 15/30)	—
Oil pressure (at 60°C, 140°F)	Above 30 kPa (0.3 kg/cm², 4.3 psi) Below 70 kPa (0.7 kg/cm², 10.0 psi) at 3 000 r/min.	—

CLUTCH

Unit: mm (in)

ITEM	STANDARD		LIMIT
Clutch lever play	10—15 (0.4—0.6)		———
Drive plate thickness	No.1 & No.2	2.9—3.1 (0.11—0.12)	2.6 (0.10)
Driven plate distortion	———		0.10 (0.004)
Clutch spring free length	———		33.0 (1.30)

TRANSMISSION + DRIVE CHAIN

Unit: mm (in) Except ratio

ITEM		STANDARD		LIMIT
Primary reduction ratio		2.178 (61/28)		———
Final reduction ratio	E-03,28,33	2.800 (42/15)		———
	The others	2.733 (41/15)		———
Gear ratios	Low	2.416 (29/12)		———
	2nd	1.625 (26/16)		———
	3rd	1.238 (26/21)		———
	4th	1.000 (21/21)		———
	Top	0.826 (19/23)		———
Shift fork to groove clearance		0.10—0.30 (0.004—0.012)		0.50 (0.020)
Shift fork groove width		5.0—5.1 (0.197—0.200)		———
Shift fork thickness		4.8—4.9 (0.189—0.193)		———
Drive chain		Type	DAIDO:DID525V9	———
		Links	110	———
		20-pitch length	———	319.4 (12.57)
Drive chain slack		30—45 (1.2—1.8)		———

CARBURETOR

ITEM		SPECIFICATION			
		E-03	E-33	E-28	E-18
Carburetor type		MIKUNI BST40SS	←	←	←
Bore size		40 mm	←	←	←
I.D. No.		32E1	32E6	32E1	32E2
Idle r/min.		1 500 ± 100 r/min.	←	←	1 500 ± 50 r/min.
Float height		14.7 ± 1.0 mm (0.58 ± 0.04 in)	←	←	←
Main jet	(M.J.)	#140	←	←	#137.5
Jet needle	(J.N.)	6F23	←	←	6H21-4th
Needle jet	(N.J.)	Y-5M	←	←	←
Throttle valve	(Th.V.)	#95	←	←	←
Pilot jet	(P.J.)	#42.5	←	←	←
Starter jet	(G.S.)	#40	←	←	←
Pilot screw	(P.S.)	PRE-SET	←	←	PRE-SET (1.0 turn back)
Throttle cable play (pulling cable)		0.5—1.0 mm (0.02—0.04 in)	←	←	←
Starter cable play		0.5—1.0 mm (0.02—0.04 in)	←	←	←

CARBURETOR

ITEM		SPECIFICATION			
		E-02,04,34	P-37	E-17,22,24	U-type E-22
Carburetor type		MIKUNI BST40SS	←	←	←
Bore size		40 mm	←	←	←
I.D. No.		32E0	32E8	32E3	32E4
Idle r/min.		1 500 ± 100 r/min.	←	←	←
Float height		14.7 ± 1.0 mm (0.58 ± 0.04 in)	←	←	←
Main jet	(M.J.)	#140	←	←	←
Jet needle	(J.N.)	6F19-3rd	←	←	←
Needle jet	(N.J.)	Y-5	←	←	←
Throttle valve	(Th.V.)	#95	←	←	←
Pilot jet	(P.J.)	#42.5	←	←	←
Starter jet	(G.S.)	#40	←	←	←
Pilot screw	(P.S.)	PRE-SET (1½ turns back)	←	PRE-SET (1.0 turn back)	PRE-SET (1⅛ turns back)
Throttle cable play (pulling cable)		0.5—1.0 mm (0.02—0.04 in)	←	←	←
Starter cable play		0.5—1.0 mm (0.02—0.04 in)	←	←	←

ELECTRICAL

Unit: mm (in)

ITEM		SPECIFICATION		NOTE
Ignition timing		10° B.T.D.C. at 1 500 r/min.		
Spark plug		Type	ND.: U31ESR-N N.G.K.: CR10E	
		Gap	0.7—0.8 (0.028—0.031)	
Spark performance		Over 8 (0.3) at 1 atm.		
Ignition coil resistance		Primary	0.07—0.12 Ω	B—B/W
		Secondary	23—25 kΩ	Plug cap—Plug cap
Generator coil resistance		Charging	0.5—0.9 Ω	Y—Y
		Power source	0.1—0.2 Ω	B—W
		Pick-up	170—256 Ω	Bl—G
Generator no-load voltage		More than 75 V(AC) at 5 000 r/min.		
Generator Max. output		Approx. 200W at 5 000 r/min.		
Regulated voltage		13.0—16.0 V at 5 000 r/min.		
Starter relay resistance		3—5 Ω		
Battery	Type designation	YTX9-BS		
	Capacity	12V 28.8 kC (8Ah)/10 HR		
	Standard electrolyte S.G.	1.320 at 20°C (68°F)		
Fuse size	Main	30 A		
	Headlight (H)	10 A		
	Headlight (L)	10 A		

WATTAGE

Unit:W

ITEM		SPECIFICATION	
		E-03,24,28,33	Other markets
Headlight	HI	60	←
	LO	55	←
Parking or position light			4
Tail/Brake light		5/21	←
Turn signal light		21	←
Speedometer light		3	←
Turn signal indicator light		2	←
High beam indicator light		2	←
Neutral indicator light		2	←
License light		5	←

BRAKE + WHEEL

Unit: mm (in)

ITEM		STANDARD	LIMIT
Rear brake pedal height		5 (0.2)	———
Brake disc thickness	Front	4.0 ± 0.2 (0.157 ± 0.008)	3.5 (0.14)
	Rear	4.5 ± 0.2 (0.177 ± 0.008)	4.0 (0.16)
Brake disc runout		———	0.30 (0.012)

ITEM	STANDARD		LIMIT
Master cylinder bore	Front	12.700–12.743 (0.5000–0.5017)	—
	Rear	12.700–12.743 (0.5000–0.5017)	—
Master cylinder piston diam.	Front	12.657–12.684 (0.4983–0.4994)	—
	Rear	12.657–12.684 (0.4983–0.4994)	—
Brake caliper cylinder bore	Front	27.000–27.050 (1.0630–1.0650)	—
	Rear	30.23–30.28 (1.1902–1.1921)	—
Brake caliper piston diam.	Front	26.90–26.95 (1.0591–1.0610)	—
	Rear	30.16–30.18 (1.1874–1.1882)	—
Wheel rim runout	Axial	—	2.0 (0.08)
	Radial	—	2.0 (0.08)
Wheel axle runout	Front	—	0.25 (0.010)
	Rear	—	0.25 (0.010)
Tire rim size	Front	J21 × 1.85	—
	Rear	J17 × MT2.50	—
Tire size	Front	90/90-21 54S	—
	Rear	120/90-17 64S	—
Tire tread depth	Front	—	3.0 (0.12)
	Rear	—	3.0 (0.12)

SUSPENSION

Unit: mm (in)

ITEM	STANDARD	LIMIT	NOTE
Front fork stroke	260 (10.2)	—	
	220 (8.7)	—	Low seat
Front fork spring free length	—	548 (21.6)	
Front fork oil level	164 (6.5)	—	
	150 (5.9)	—	Low seat

ITEM	STANDARD	LIMIT	NOTE
Rear shock absorber spring pre-set length	247.5 (9.74)	———	
Rear wheel travel	260 (10.2)	———	
	220 (8.7)	———	Low seat
Swingarm pivot shaft runout	———	0.3 (0.01)	

TIRE PRESSURE

COLD INFLATION TIRE PRESSURE	SOLO RIDING			DUAL RIDING		
	kPa	kg/cm²	psi	kPa	kg/cm²	psi
FRONT	150	1.50	22	175	1.75	25
REAR	175	1.75	25	200	2.00	29

FUEL + OIL

ITEM	SPECIFICATION		NOTE
Fuel type	Use only unleaded gasoline of at least 87 pump octane ($\frac{R+M}{2}$) or 91 octane or higher rated by the research method. Gasoline containing MTBE (Methyl Tertiary Butyl Ether), less than 10% ethanol, or less than 5% methanol with appropriate cosolvents and corrosion inhibitor is permissible.		E-03,33
	Use only unleaded gasoline of at least 87 pump octane ($\frac{R+M}{2}$ method) or 91 octane or higher rated by the Research Method.		E-28
	Gasoline used should be graded 85-95 octane or higher. An unleaded gasoline is recommended.		Other markets
Fuel tank capacity	Including reserve	12 L (3.2/2.6 US/Imp gal)	E-33
		13 L (3.4/2.9 US/Imp gal)	Other markets
	Only reserve	3.0 L (0.8/0.7 US/Imp gal)	
Engine oil type	SAE 10W/40, API SF or SG		
Engine oil capacity	Oil change	2 300 ml (2.4/2.0 US/Imp qt)	
	Oil and filter change	2 400 ml (2.5/2.1 US/Imp qt)	
	Engine overhaul	2 600 ml (2.7/2.3 US/Imp qt)	
Front fork oil type	Fork oil # 10		
Front fork oil capacity (each leg)	565 ml (19.1/19.9 US/Imp oz)		
	563 ml (19.0/19.8 US/Imp oz)		Low seat
Brake fluid type	DOT 4		

WIRING DIAGRAM

(ON AND AFTER '98-MODEL PRODUCTION)

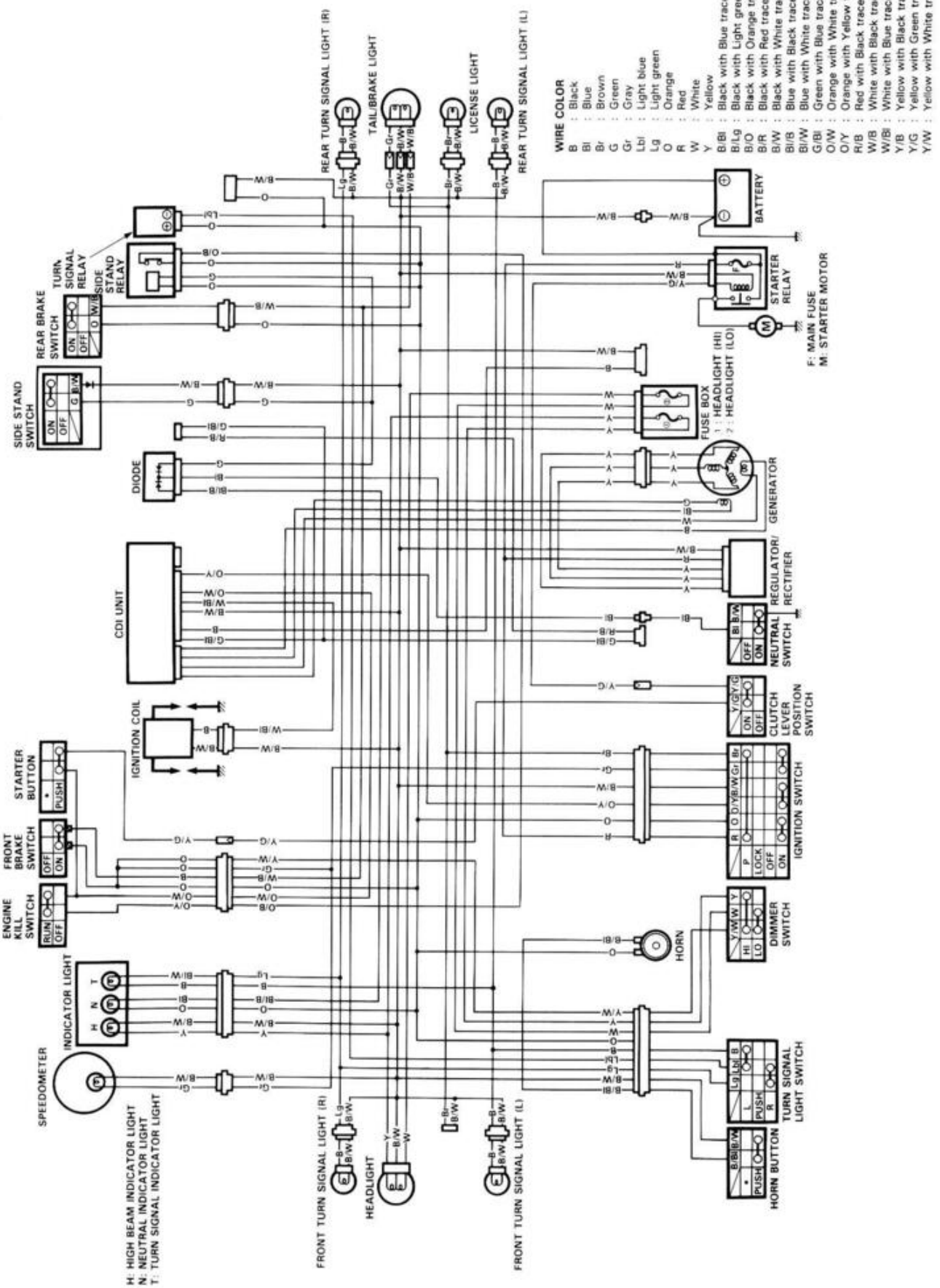

DR650SEK1 ('01-MODEL)

CONTENTS

SPECIFICATIONS 10- 1
SERVICE DATA 10- 2
LIQUID GASKET 10- 10

SPECIFICATIONS

DIMENSIONS AND DRY MASS

Overall length	2 345 mm (92.3 in) E-17, 28, 22
	2 325 mm (91.5 in) ..... E-17, 28, 22 (Low seat)
	2 255 mm (88.8 in) ..... Others
	2 235 mm (88.0 in) ..... Others (Low seat)
Overall width	865 mm (34.1 in)
Overall height	1 205 mm (47.4 in)
	1 165 mm (45.9 in) ..... (Low seat)
Wheelbase	1 490 mm (58.7 in)
	1 475 mm (58.1 in) ..... (Low seat)
Ground clearance	265 mm (10.4 in)
	225 mm (8.9 in) ..... (Low seat)
Seat height	885 mm (34.8 in)
	845 mm (33 in) ..... (Low seat)
Dry mass	147 kg (324 lbs)

ENGINE

Type	Four-stroke, air-cooled, OHC
Valve clearance (IN)	0.08 – 0.13 mm (0.003 – 0.005 in)
(EX)	0.17 – 0.22 mm (0.007 – 0.009 in)
Number of cylinders	1
Bore	100 mm (3.937 in)
Stroke	82 mm (3.228 in)
Displacement	644 cm^3 (39.3 cu. in)
Compression ratio	9.5 : 1
Carburetor	MIKUNI BST40SS, single
Air cleaner	Polyurethane foam element
Starter system	Electric
Lubrication system	Wet sump
Idle speed	1 500 ± 100 r/min

TRANSMISSION

Clutch	Wet multi-plate type
Transmission	5-speed constant mesh
Gearshift pattern	1-down, 4-up
Primary reduction ratio	2.178 (61/28)
Gear ratios, Low	2.416 (29/12)
2nd	1.625 (26/16)
3rd	1.238 (26/21)
4th	1.000 (21/21)
Top	0.826 (19/23)
Final reduction ratio	2.800 (42/15) E-03, 28, 33
	2.733 (41/15) ..... Others
Drive chain	DID 525 V8, 110 links

CHASSIS

Front suspension	Telescopic, coil spring, oil damped
Rear suspension	Link type, coil spring, oil damped, spring preload fully adjustable, compression damping force adjustable
Front fork stroke	260 mm (10.2 in)
	220 mm (8.7 in) ..... (Low seat)
Rear wheel travel	260 mm (10.2 in)
	220 mm (8.7 in) ..... (Low seat)
Steering angle	43°
Caster	28° 30'
Trail	111 mm (4.37 in)
Turning radius	2.5 m (8.2 ft)
Front brake	Disc brake
Rear brake	Disc brake
Front tire size	90/90-21 54S, tube type
Rear tire size	120/90-17 64S, tube type

ELECTRICAL

Ignition type	Electronic ignition (CDI)
Ignition timing	10° B.T.D.C. at 1 500 rpm
Spark plug	NGK CR10E or DENSO U31ESR-N
Battery	12V 28.8 kC (8 Ah)/10HR
Generator	Three-phase A.C. generator
Main fuse	30A
Fuse	10/10A
Headlight	12V 60/55W
Parking or city light	12V 4W ..... Except E-03, 24, 28, 33
Turn signal light	12V 21W
Brake light/Taillight	12V 21/5W
License plate light	12V 5W
Speedometer light	12V 1.7W
Neutral indicator light	12V 2W
High beam indicator light	12V 2W
Turn signal indicator light	12V 2W

CAPACITIES

Fuel tank, including reserve	12.0 L (3.2/2.6 US/Imp gal) E-33
	13.0 L (3.4/2.9 US/Imp gal) ..... Others
reserve	3.0 L (0.8/0.7 US/Imp gal)
Engine oil, oil change	2 300 ml (2.4/2.0 US/Imp qt)
with filter change	2 400 ml (2.5/2.1 US/Imp qt)
overhaul	2 600 ml (2.7/2.3 US/Imp qt)
Front fork oil (each leg)	565 ml (19.1/19.9 US/Imp oz)
	563 ml (19.0/19.8 US/Imp oz) ..... (Low seat)

SERVICE DATA

VALVE + GUIDE

Unit: mm (in)

ITEM	STANDARD		LIMIT
Valve diam.	IN.	33 (1.3)	———
	EX.	28 (1.1)	———
Valve clearance (when engine is cold)	IN.	0.08 – 0.13 (0.003 – 0.005)	———
	EX.	0.17 – 0.22 (0.0067 – 0.0087)	———
Valve guide to valve stem clearance	IN.	0.010 – 0.037 (0.0004 – 0.0015)	———
	EX.	0.030 – 0.057 (0.0012 – 0.0022)	———
Valve stem deflection	IN. & EX.	———	0.35 (0.014)
Valve guide I.D.	IN. & EX.	5.500 – 5.512 (0.2165 – 0.2170)	———
Valve stem O.D.	IN.	5.475 – 5.490 (0.2156 – 0.2161)	———
	EX.	5.455 – 5.470 (0.2148 – 0.2154)	———
Valve stem runout	IN. & EX.	———	0.05 (0.002)
Valve head thickness	IN. & EX.	———	0.5 (0.02)
Valve stem end length	IN. & EX.	———	2.7 (0.11)
Valve seat width	IN. & EX.	0.9 – 1.1 (0.035 – 0.043)	———
Valve head radial runout	IN. & EX.	———	0.03 (0.001)
Valve spring free length (IN. & EX.)	INNER	———	34.4 (1.35)
	OUTER	———	38.1 (1.50)
Valve spring tension (IN. & EX.)	INNER	5.9 – 6.7 kg (13.0 – 14.8 lbs) at length 27.5 mm (1.1 in)	———
	OUTER	13.8 – 15.8 kg (30.4 – 34.8 lbs) at length 31.0 mm (1.2 in)	———

CAMSHAFT + CYLINDER HEAD

Unit: mm (in)

ITEM	STANDARD		LIMIT
Cam height	IN.	33.710 – 33.750 (1.3272 – 1.3287)	33.410 (1.3154)
	EX.	33.700 – 33.740 (1.3268 – 1.3283)	33.400 (1.3150)
Camshaft journal oil clearance	Right & Center	0.032 – 0.066 (0.0013 – 0.0026)	0.150 (0.0059)
	Left	0.028 – 0.059 (0.0011 – 0.0023)	0.150 (0.0059)
Camshaft journal holder I.D.	Right & Center	22.012 – 22.025 (0.8666 – 0.8671)	———
	Left	17.512 – 17.525 (0.6894 – 0.6900)	———
Camshaft journal O.D.	Right & Center	21.959 – 21.980 (0.8645 – 0.8654)	———
	Left	17.466 – 17.484 (0.6877 – 0.6883)	———
Camshaft runout	———		0.10 (0.004)
Rocker arm I.D.	IN. & EX.	12.000 – 12.018 (0.4724 – 0.4731)	———
Rocker arm shaft O.D.	IN. & EX.	11.973 – 11.984 (0.4714 – 0.4718)	———
Cylinder head distortion	———		0.05 (0.002)
Cylinder head cover distortion	———		0.05 (0.002)

CYLINDER + PISTON + PISTON RING

Unit: mm (in)

ITEM	STANDARD		LIMIT
Piston to cylinder clearance	0.020 – 0.030 (0.0008 – 0.0012)		0.120 (0.0047)
Cylinder bore	100.000 – 100.015 (3.9371 – 3.9376)		Nicks or Scratches
Piston diam.	99.975 – 99.990 (3.9360 – 3.9366) Measure at 21 mm (0.8 in) from the skirt end.		99.880 (3.9323)
Cylinder distortion	———		0.05 (0.002)
Piston ring free end gap	1st R	Approx. 13.5 (0.53)	10.8 (0.43)
	2nd R	Approx. 11.4 (0.45)	9.1 (0.36)
Piston ring end gap	1st	0.30 – 0.45 (0.012 – 0.018)	0.50 (0.020)
	2nd	0.45 – 0.60 (0.018 – 0.024)	1.00 (0.039)
Compression pressure (Automatic decomp. actuated)	Approx. 850 kPa (8.5 kg/cm², 120 psi)		———

ITEM	STANDARD		LIMIT
Piston ring to groove clearance	1st	———	0.180 (0.0071)
	2nd	———	0.150 (0.0059)
Piston ring groove width	1st	1.230 – 1.250 (0.048 – 0.049)	———
	2nd	1.210 – 1.230 (0.047 – 0.048)	———
	Oil	2.810 – 2.830 (0.110 – 0.111)	———
Piston ring thickness	1st	1.170 – 1.190 (0.0461 – 0.0469)	———
	2nd	1.150 – 1.170 (0.0453 – 0.0461)	———
Piston pin bore	23.002 – 23.008 (0.9056 – 0.9058)		23.030 (0.9067)
Piston pin O.D.	22.996 – 23.000 (0.9054 – 0.9055)		22.980 (0.9047)

CONROD + CRANKSHAFT

Unit: mm (in)

ITEM	STANDARD	LIMIT
Conrod small end I.D.	23.006 – 23.014 (0.9057 – 0.9061)	23.040 (0.9071)
Conrod deflection	———	3.0 (0.12)
Conrod big end side clearance	0.10 – 0.65 (0.004 – 0.026)	1.00 (0.039)
Conrod big end width	24.95 – 25.00 (0.982 – 0.984)	———
Crankshaft runout	———	0.05 (0.002)
Crank web to web width	71.0 ± 0.1 (2.795 ± 0.004)	———

OIL PUMP

ITEM	STANDARD	LIMIT
Oil pump reduction ratio	1.633 (61/28 × 30/20 × 15/30)	———
Oil pressure (at 60°C,140°F)	Above 30 kPa (0.3 kg/cm^2, 4.3 psi) Below 70 kPa (0.7 kg/cm^2, 10.0 psi) at 3 000 r/min.	———

CLUTCH

Unit: mm (in)

ITEM	STANDARD		LIMIT
Clutch lever play	10 – 15 (0.4 – 0.6)		———
Drive plate thickness	No.1 & No.2	2.9 – 3.1 (0.11 – 0.12)	2.6 (0.10)
Driven plate distortion	———		0.10 (0.004)
Clutch spring free length	———		33.0 (1.30)

TRANSMISSION + DRIVE CHAIN

Unit: mm (in) Except ratio

ITEM		STANDARD		LIMIT
Primary reduction ratio		2.178 (61/28)		———
Final reduction ratio	E-03,28,33	2.800 (42/15)		———
	The others	2.733 (41/15)		———
Gear ratios	Low	2.416 (29/12)		———
	2nd	1.625 (26/16)		———
	3rd	1.238 (26/21)		———
	4th	1.000 (21/21)		———
	Top	0.826 (19/23)		———
Shift fork to groove clearance		0.10 – 0.30 (0.004 – 0.012)		0.50 (0.020)
Shift fork groove width		5.0 – 5.1 (0.197 – 0.200)		———
Shift fork thickness		4.8 – 4.9 (0.189 – 0.193)		———
Drive chain		Type	DAIDO:DID525V9	———
		Links	110	———
		20-pitch length	———	319.4 (12.57)
Drive chain slack		30 – 45 (1.2 – 1.8)		———

CARBURETOR

ITEM		SPECIFICATION		
		E-03, 28	E-33	E-18
Carburetor type		MIKUNI BST40SS	←	←
Bore size		40 mm	←	←
I.D. No.		32E1	32E6	32E2
Idle r/min.		1 500 ± 100 r/min.		1 500 ± 50 r/min.
Float height		14.7 ± 1.0 mm (0.58 ± 0.04in)	←	←
Main jet	(M.J.)	#140	←	#137.5
Jet needle	(J.N.)	6F23	←	6H21-4th
Needle jet	(N.J.)	Y-5M	←	Y-5
Throttle valve	(Th.V.)	#95	←	←
Pilot jet	(P.J.)	#42.5	←	←
Starter jet	(G.S.)	#40	←	←
Pilot screw	(P.S.)	PRE-SET	←	PRE-SET (1.0 turn back)
Throttle cable play (pulling cable)		0.5 – 1.0 mm (0.02 – 0.04 in)	←	←
Starter cable play		0.5 – 1.0 mm (0.02 – 0.04 in)	←	←

CARBURETOR

ITEM		SPECIFICATION		
		E-04, 34, 54	E-17, 22, 24	U-type E-22
Carburetor type		MIKUNI BST40SS	←	←
Bore size		40 mm	←	←
I.D. No.		32E0	32E3	32E4
Idle r/min.		1 500 ± 100 r/min.	←	←
Float height		14.7 ± 1.0 mm (0.58 ± 0.04 in)	←	←
Main jet	(M.J.)	#140	←	←
Jet needle	(J.N.)	6F19-3rd	←	←
Needle jet	(N.J.)	Y-5	←	←
Throttle valve	(Th.V.)	#95	←	←
Pilot jet	(P.J.)	#42.5	←	←
Starter jet	(G.S.)	#40	←	←
Pilot screw	(P.S.)	PRE-SET (1½ turns back)	PRE-SET (1.0 turn back)	PRE-SET (1⅛ turns back)
Throttle cable play (pulling cable)		0.5 – 1.0 mm (0.02 – 0.04 in)	←	←
Starter cable play		0.5 – 1.0 mm (0.02 – 0.04 in)	←	←

ELECTRICAL

Unit: mm (in)

ITEM		SPECIFICATION		NOTE
Ignition timing		10° B.T.D.C. at 1 500 r/min.		
Spark plug		Type	ND.: U31ESR-N N.G.K.: CR10E	
		Gap	0.7 – 0.8 (0.028 – 0.031)	
Spark performance		Over 8 (0.3) at 1 atm.		
Ignition coil resistance		Primary	0.07 – 0.12 Ω	B – B/W
		Secondary	23 – 25 kΩ	Plug cap – Plug cap
Generator coil resistance		Charging	0.5 – 0.9 Ω	Y – Y
		Power source	0.1 – 0.2 Ω	B – W
		Pick-up	170 – 256 Ω	Bl – G
Generator no-load voltage		More than 75 V (AC) at 5 000 r/min.		
Generator Max. output		Approx. 200 W at 5 000 r/min.		
Regulated voltage		13.0 – 16.0 V at 5 000 r/min.		
Starter relay resistance		3 – 5 Ω		
Battery	Type designation	YTX9-BS		
	Capacity	12V 28.8 kC (8Ah)/10 HR		
	Standard electrolyte S.G.	1.320 at 20°C (68°F)		
Fuse size	Main	30 A		
	Headlight (H)	10 A		
	Headlight (L)	10 A		

WATTAGE

Unit: W

ITEM		SPECIFICATION	
		E-03, 24, 28, 33	Other markets
Headlight	HI	60	←
	LO	55	←
Parking or position light			4
Brake light/Taillight		5/21	←
Turn signal light		21	←
Speedometer light		3	←
Turn signal indicator light		2	←
High beam indicator light		2	←
Neutral indicator light		2	←
License light		5	←

BRAKE + WHEEL

Unit: mm (in)

ITEM		STANDARD	LIMIT
Rear brake pedal height		5 (0.2)	———
Brake disc thickness	Front	4.0 ± 0.2 (0.157 ± 0.008)	3.5 (0.14)
	Rear	4.5 ± 0.2 (0.177 ± 0.008)	4.0 (0.16)
Brake disc runout		———	0.30 (0.012)

ITEM	STANDARD		LIMIT
Master cylinder bore	Front	12.700 – 12.743 (0.5000 – 0.5017)	———
	Rear	12.700 – 12.743 (0.5000 – 0.5017)	———
Master cylinder piston diam.	Front	12.657 – 12.684 (0.4983 – 0.4994)	———
	Rear	12.657 – 12.684 (0.4983 – 0.4994)	———
Brake caliper cylinder bore	Front	27.000 – 27.050 (1.0630 – 1.0650)	———
	Rear	30.23 – 30.28 (1.1902 – 1.1921)	———
Brake caliper piston diam.	Front	26.90 – 26.95 (1.0591 – 1.0610)	———
	Rear	30.16 – 30.18 (1.1874 – 1.1882)	———
Wheel rim runout	Axial	———	2.0 (0.08)
	Radial	———	2.0 (0.08)
Wheel axle runout	Front	———	0.25 (0.010)
	Rear	———	0.25 (0.010)
Tire rim size	Front	J21 × 1.85	———
	Rear	J17 × MT2.50	———
Tire size	Front	90/90-21 54S	———
	Rear	120/90-17 64S	———
Tire tread depth	Front	———	3.0 (0.12)
	Rear	———	3.0 (0.12)

SUSPENSION

Unit: mm (in)

ITEM	STANDARD	LIMIT	NOTE
Front fork stroke	260 (10.2)	———	
	220 (8.7)	———	Low seat
Front fork spring free length	———	548 (21.6)	
Front fork oil level	164 (6.5)	———	
	150 (5.9)	———	Low seat

ITEM	STANDARD	LIMIT	NOTE
Rear shock absorber spring pre-set length	247.5 (9.74)	———	
Rear wheel travel	260 (10.2)	———	
	220 (8.7)	———	Low seat
Swingarm pivot shaft runout	———	0.3 (0.01)	

TIRE PRESSURE

COLD INFLATION TIRE PRESSURE	SOLO RIDING			DUAL RIDING		
	kPa	kg/cm²	psi	kPa	kg/cm²	psi
FRONT	150	1.50	22	175	1.75	25
REAR	175	1.75	25	200	2.00	29

FUEL + OIL

ITEM	SPECIFICATION		NOTE
Fuel type	Use only unleaded gasoline of at least 87 pump octane ($\frac{R+M}{2}$) or 91 octane or higher rated by the research method. Gasoline containing MTBE (Methyl Tertiary Butyl Ether), less than 10% ethanol, or less than 5% methanol with appropriate cosolvents and corrosion inhibitor is permissible.		E-03, 28, 33
	Gasoline used should be graded 85-95 octane or higher. An unleaded gasoline is recommended.		Other markets
Fuel tank capacity	Including reserve	12 L (3.2/2.6 US/Imp gal)	E-33
		13 L (3.4/2.9 US/Imp gal)	Other markets
	Only reserve	3.0 L (0.8/0.7 US/Imp gal)	
Engine oil type	SAE 10W/40, API SF or SG		
Engine oil capacity	Oil change	2 300 ml (2.4/2.0 US/Imp qt)	
	Oil and filter change	2 400 ml (2.5/2.1 US/Imp qt)	
	Engine overhaul	2 600 ml (2.7/2.3 US/Imp qt)	
Front fork oil type	Fork oil #10		
Front fork oil capacity (each leg)	565 ml (19.1/19.9 US/Imp oz)		
	563 ml (19.0/19.8 US/Imp oz)		Low seat
Brake fluid type	DOT 4		

LIQUID GASKET

CYLINDER HEAD COVER

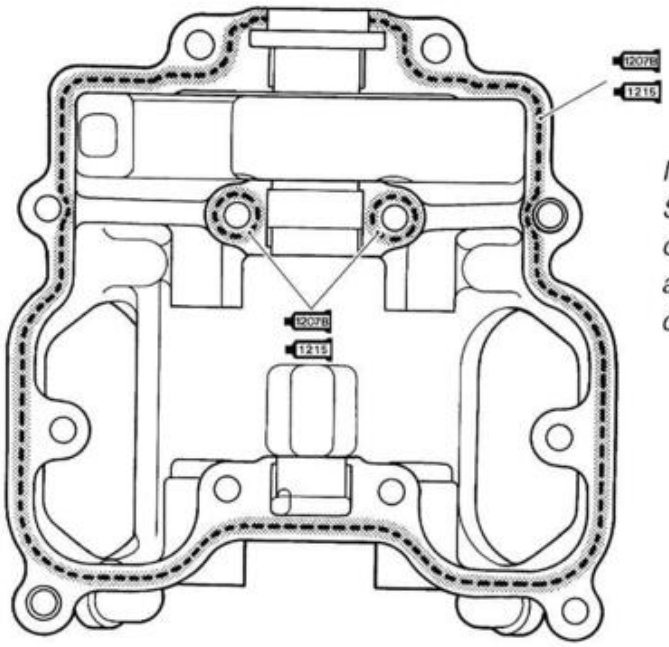

NOTE:
SUZUKI BOND NO.1215 or NO.1207B has to be applied to the cylinder head cover and cylinder head.

CYLINDER HEAD

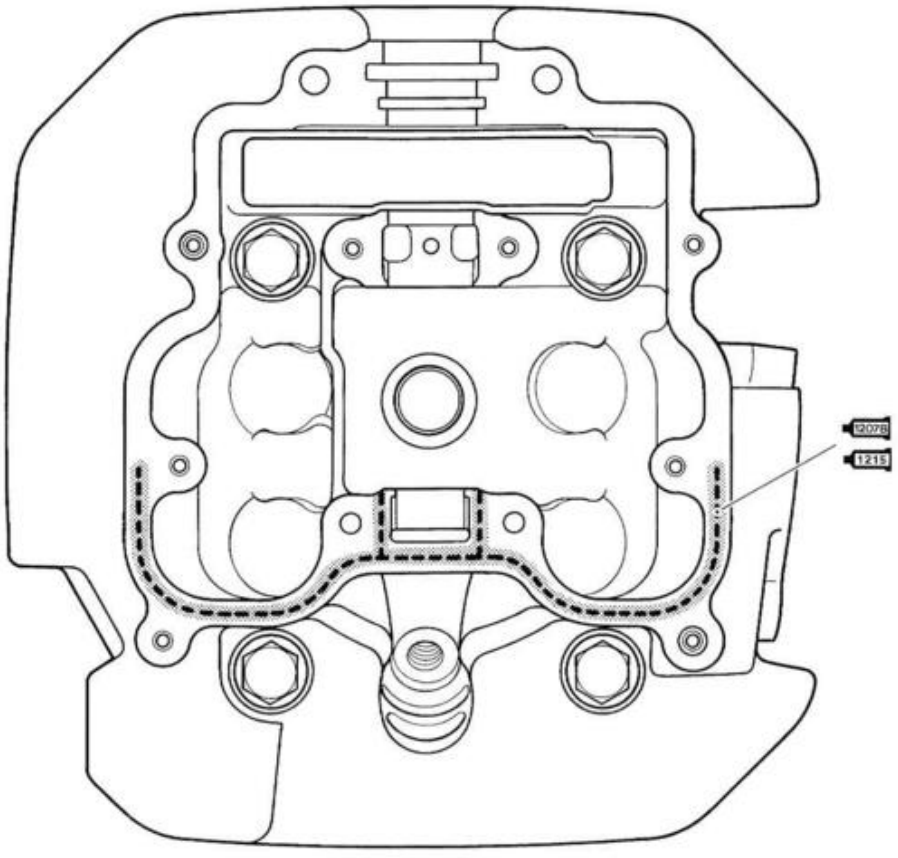

IMPORTANT NOTICE !

If this manual was not purchased from manualcd then you will be missing important pages and also have some features locked. To insure you have the complete manual only buy from manualcd

If this manual was not purchased from manualcd please contact us and we will inform you of what pages are missing and which features are locked.

manualcd@hotmail.com

SUZUKI

DR650SE

OWNER'S MANUAL

This owner's manual contains
important safety information.
Please read it carefully.

Part No. 99011-32E63-03A
June, 2008 (TK) EN

California Proposition 65 Warning

⚠ WARNING

Engine exhaust, some of its constituents, and certain product components contain or emit chemicals known to the State of California to cause cancer and birth defects or other reproductive harm.

This manual should be considered a permanent part of the motorcycle and should remain with the motorcycle when resold or otherwise transferred to a new owner or operator. The manual contains important safety information and instructions which should be read carefully before operating the motorcycle.

IMPORTANT

WARNING/CAUTION/NOTE

Please read this manual and follow its instructions carefully. To emphasize special information, the symbol ⚠ and the words WARNING, CAUTION and NOTE have special meanings. Pay special attention to the messages highlighted by these signal words:

⚠ WARNING

Indicates a potential hazard that could result in death or injury.

CAUTION

Indicates a potential hazard that could result in motorcycle damage.

NOTE: Indicates special information to make maintenance easier or instructions clearer.

WARNINGs and CAUTIONs are arranged like this:

⚠ WARNING-or-CAUTION

The first part will describe a POTENTIAL HAZARD and WHAT CAN HAPPEN if you ignore the WARNING or CAUTION.

The second part will describe HOW TO AVOID THE HAZARD.

FOREWORD

Motorcycling is one of the most exhilarating sports and to ensure your riding enjoyment, you should become thoroughly familiar with the information presented in this Owner's Manual before riding the motorcycle.

The proper care and maintenance that your motorcycle requires is outlined in this manual. By following these instructions explicitly, you will ensure a long trouble-free operating life for your motorcycle. This motorcycle also conforms to the U.S. Environmental Protection Agency emission regulations which apply to new motorcycles. The proper adjustment of engine components is necessary for this motorcycle to comply with the EPA regulations. Therefore, please follow the maintenance instructions closely to ensure emission compliance. Your authorized Suzuki dealer has experienced technicians that are trained to provide your machine with the best possible service with the right tools and equipment.

All information, illustrations and specifications contained in this manual are based on the latest product information available at the time of publication. Due to improvements or other changes, there may be some discrepancies between information in this manual and your motorcycle. Suzuki reserves the right to make production changes at any time, without notice and without incurring any obligation to make the same or similar changes to vehicles previously built or sold.

Suzuki Motor Corporation believes in conservation and protection of Earth's natural resources. To that end, we encourage every vehicle owner to recycle, trade in, or properly dispose of, as appropriate, used motor oil, coolant, and other fluids, batteries, and tires.

SUZUKI MOTOR CORPORATION

© COPYRIGHT SUZUKI MOTOR CORPORATION 2008

TABLE OF CONTENTS

THE SPORT OF MOTORCYCLING	1
FUEL AND OIL RECOMMENDATION	2
CONTROLS, EQUIPMENT AND ADJUSTMENTS	3
BREAK-IN AND INSPECTION BEFORE RIDING	4
RIDING TIPS	5
ACCESSORY USE AND MOTORCYCLE LOADING	6
INSPECTION AND MAINTENANCE	7
TROUBLESHOOTING	8
STORAGE PROCEDURE AND MOTORCYCLE CLEANING	9
CUSTOMER INFORMATION	10
SPECIFICATIONS	
INDEX	

THE SPORT OF MOTORCYCLING

MOST ACCIDENTS CAN BE AVOIDED 1-2
IF YOU DON'T HAVE A HELMET, BUY A HELMET AND
WEAR IT EVERY TIME YOU RIDE 1-2
IF A COLLISION IS IMMINENT, DO SOMETHING 1-3
SPECIAL SITUATIONS REQUIRE SPECIAL CARE 1-3
KNOW YOUR LIMITS 1-4
BE EXTRA SAFETY-CONSCIOUS ON BAD WEATHER DAYS 1-4
PRACTICE AWAY FROM TRAFFIC 1-4
INSPECTION BEFORE RIDING 1-5
ACCESSORIES AND LOADING 1-5
CARRYING A PASSENGER, ON-ROAD 1-5
MOTORCYCLE SAFETY FOUNDATION'S
"RIDING TIPS AND PRACTICE GUIDE" HANDBOOK
(FOR OWNERS IN USA) 1-6
BE STREET SMART 1-6
CONCLUSION 1-6
ADDITIONAL CONSIDERATIONS WHEN RIDING OFF-HIGHWAY: 1-7

THE SPORT OF MOTORCYCLING

Your motorcycle and this owner's manual have been designed by people like you who enjoy motorcycling. People become motorcyclists for many reasons. For starters, street riding is fun and invigorating. But no matter why you became a motorcyclist, or how experienced you are, you will eventually face some challenging situations. In preparing for these challenges, you will be fine-tuning your coordination, concentration, and attitude. Learning the skills and strategies associated with motorcycling is the basis for safely participating in this sport. Many motorcyclists find that as they become better riders, they also get more enjoyment from the freedom unique to motorcycling.

Please remember:

MOST ACCIDENTS CAN BE AVOIDED

The most common type of motorcycle accident in the U.S. occurs when a car traveling towards a motorcycle turns left in front of the motorcycle. Is that because other drivers are out to get motorcyclists? No, other drivers simply don't always notice motorcyclists.

Ride defensively. Wise motorcyclists use a strategy of assuming they are invisible to other drivers, even in broad daylight. Pay careful attention to other motorists, especially at intersections, because they may not be paying attention to you. Select a lane position that gives you the best view of others, and other motorists the best view of you. Wear bright, reflective clothing. Put reflective strips on your helmet.

IF YOU DON'T HAVE A HELMET, BUY A HELMET AND WEAR IT EVERY TIME YOU RIDE

Most accidents occur within a few miles of home, and almost half occur at speeds of less than 30 mph. So even if you're just going on a quick errand, be prepared - strap on your helmet before you take off.

Helmets do not reduce essential vision or hearing. Generally, helmets do not cause or intensify injury if you crash. Helmets simply help your skull protect your intelligence, your memory, your personality, and your life.

Your eyesight is equally valuable. Wearing suitable eye protection can help keep your vision unblurred by the wind and save your eyes from airborne hazards like bugs, dirt, or pebbles kicked up by tires.

IF A COLLISION IS IMMINENT, DO SOMETHING

Many riders fear locking up their brakes or haven't learned to swerve to avoid an accident. Many inexperienced riders (and too many seasoned riders) use only their rear brake in an emergency, resulting in unnecessary impacts in some cases and unnecessarily high impact speeds in other cases. Your rear brake can only provide about 30% of your motorcycle's potential stopping power. The front and rear brakes can and should be used together to maximize braking effectiveness.

Experienced motorcyclists learn to "cover" the front brake lever by lightly resting a couple of fingers over the lever when riding in traffic and near intersections to give their reaction time a head start.

Emergency stopping and swerving are techniques that you should practice and master before you find yourself in an emergency situation. The best place to practice such techniques is in a controlled environment such as the Motorcycle Safety Foundation's (MSF) rider training courses. The MSF's Motorcycle Rider Courses (fundamental techniques) and Experienced Rider Courses (advanced strategies) present hands-on instruction of the basic principles of motorcycling and a variety of accident-avoidance maneuvers. Even a seasoned motorcyclist can improved his or her riding skills, and pick up a few new skills, through these courses. Some insurance companies even offer discounts to course graduates.

SPECIAL SITUATIONS REQUIRE SPECIAL CARE

Of course, there are some times when full-force braking is not the correct technique. When the road surface is wet, loose, or rough, you should brake with care. When you're leaned over in a corner, avoid braking. Straighten up before braking. Better yet, slow down before entering the corner.

In these situations, the traction available between your tires and the road surface is limited. Overbraking when traction is limited will cause your tires to skid, possibly resulting in loss of directional control or causing you and your motorcycle to fall over.

KNOW YOUR LIMITS

Always ride within the boundaries of your own skills. Knowing these limits and staying within them will help you avoid accidents.

A major cause of accidents involving only a motorcycle (and no cars) is going too fast through a turn. Before entering a turn, select an appropriately low cornering speed.

Even on straight roads, ride at a speed that is appropriate for the traffic, visibility and road conditions, your motorcycle, and your experience.

Riding a motorcycle safely requires that your mental and physical skills are fully part of the experience. You should not attempt to operate a motor vehicle, especially one with two wheels, if you are tired or under the influence of alcohol or other drugs. Alcohol, illegal drugs, and even some prescription and over-the-counter drugs can cause drowsiness, loss of coordination, loss of balance, and especially the loss of good judgment. If you are tired or under the influence of alcohol or other drugs, PLEASE DO NOT RIDE your motorcycle.

BE EXTRA SAFETY-CONSCIOUS ON BAD WEATHER DAYS

Riding on bad weather days, especially wet ones, requires extra caution. Braking distances increase on a rainy day. Stay off the painted surface marks, manhole covers, and greasy-appearing areas, as they can be especially slippery. Use extra caution at railway crossings and on metal gratings and bridges. When it starts to rain, any oil or grease on the road rises to the surface of the water. Pull over and wait a few minutes until this oil film is washed away before riding. Whenever in doubt about road conditions, slow down!

PRACTICE AWAY FROM TRAFFIC

Your riding skill and your mechanical knowledge form the foundation for safe riding practices. We suggest that you practice riding your motorcycle in a non-traffic situation until you are thoroughly familiar with your machine and its controls. Again, consider taking one of the MSF's Rider Courses. Even experts will be pleased with the caliber of the information presented in these courses. As the MSF says: "The more you know, the better it gets !

INSPECTION BEFORE RIDING

Review the instructions in the "INSPECTION BEFORE RIDING" section of this manual. Perform an entire pre-ride inspection before you head out on the road. Spending a few minutes preparing your machine for a ride can help prevent accidents due to mechanical failure or costly, inconvenient breakdowns far from home.

ACCESSORIES AND LOADING

The accessories you use with your motorcycle and the manner in which you load your gear onto the bike might create hazards. Aerodynamics, handling, balance, and cornering clearance can suffer, and the suspension and tires can be overloaded. Read the "ACCESSORY USE AND VEHICLE LOADING" section.

CARRYING A PASSENGER, ON-ROAD

Carrying a passenger, when done correctly, is a great way to share the joy of motorcycling. You will have to alter your riding style somewhat since the extra weight of a passenger will affect handling and braking. You may also need to adjust tire pressures and suspension; please refer to the Tire Pressure and Loading section and the Suspension section for more details.

A passenger needs the same protection that you do, including a helmet and proper clothing. The passenger should not wear long shoe laces or loose pants that could get caught in the wheel or the chain. Passengers must be tall enough that their feet reach the footrests.

Note the limits on carrying a passenger off-road in the "ADDITIONAL CONSIDERATIONS WHEN RIDING OFF-HIGHWAY" section.

MOTORCYCLE SAFETY FOUNDATION'S "RIDING TIPS AND PRACTICE GUIDE" HANDBOOK (FOR OWNERS IN USA)

This special handbook, supplied with your owner's manual, contains a variety of safety tips, helpful hints, and practice exercises. This manual can increase your riding enjoyment and safety. You should read it thoroughly.

BE STREET SMART

Always heed speed limits, local laws, and the basic rules of the road. Set a good example for others by demonstrating a courteous attitude and a responsible riding style.

CONCLUSION

Traffic, road and weather conditions vary. Other motorists' actions are unpredictable. Your motorcycle's condition can change. These factors can best be dealt with by giving every ride your full attention.

Circumstances beyond your control could lead to an accident. You need to prepare for the unexpected by wearing a helmet and other protective gear, and learning emergency braking and swerving techniques to minimize the damage to you and your machine. The best way to learn basic riding skills and evasive maneuvers or refresh your own riding skills is to take one of the courses offered by the Motorcycle Safety Foundation. Your Suzuki dealer can help you locate the fundamental or advanced riding skills course nearest you, or owners in the USA can call toll-free 1-800-446-9227.

Good riding on your new Suzuki !

ADDITIONAL CONSIDERATIONS WHEN RIDING OFF-HIGHWAY:

A. **Off-highway riding calls for off-highway protective gear.**
In addition to the reasons cited above for wearing a helmet and eye protection on the street, the trail presents its own hazards. Visibility and trail conditions can vary greatly from section to section and season to season. These changes are sometimes unpredictable, and even an experienced rider can have an accident. There may be branches hanging over the trail at eye level. Wear a helmet and eye protection every time you ride.

Wear proper clothing when you ride. Avoid loose clothes or scarves, which could get caught in moving parts. Abrasion injuries can be minimized by wearing protective clothing including gloves, strong boots that fit over the ankle, long pants, and a long sleeve shirt or jacket. Experienced riders often wear a kidney belt and chest or back protector for additional comfort and protection.

B. **Carrying a Passenger, Off-Road.**
Although your Dual Sport motorcycle is equipped to carry a passenger, carrying a passenger or cargo while riding in rough terrain could be hazardous. Carrying a passenger or strapping cargo to the passenger seat can greatly reduce your ability to balance and steer the motorcycle and deal with quickly changing off-road conditions. Ride at a reduced speed and limit your off-road riding to smooth, level surfaces when carrying a passenger or cargo.

C. **Use the buddy system.**
Share the fun of a good off-road ride. A riding partner can also be a great help if one of you gets stranded or injured. If none of your friends rides off-highway, ask your Suzuki dealer how to go about joining a club. If your friends do ride, you can all join a club or start one of your own !

D. **Obstacles come with the territory.**
Negotiating obstacles is a normal part, and often the most fun and challenging part, of off-highway riding. Scan the areas ahead. You may come upon naturally-occurring obstacles such as ruts, bumps, trees, low branches, blind corners, or sudden dropoffs. You may encounter animals, other recreational vehicles, horseback riders, or hikers. The sooner you notice potential obstacles and trail-sharing needs, the sooner you can plan your actions accordingly.

E. **Practice on level ground.**
Before you begin riding off-highway, you should find a good place to practice the skills you need to ride safely. Review the Motorcycle Safety Foundation's "Tips and Practice Guide for the Off-Highway Motorcyclist" Handbook supplied with this owner's manual (for owners in USA). This special handbook contains a variety of safety tips, helpful hints, enjoyment and safety.

Find a flat, open area with enough space to maneuver. Review local laws to make sure you are not trespassing or violating other ordinances. Check with your Suzuki dealer or call your local park ranger or police department if you do not know where you can ride.

Review the controls on your motorcycle before riding. Learn to find these controls without looking for them. You will not have time to look for them when you are riding, since you will be concentrating on the terrain.

F. **Be environmentally conscious.**

Protect your right to ride. When you ride, remember to keep the terrain in good condition. Tread Lightly ! Resist the urge to blaze new trails - stay on established trail systems. Don't destroy plant life. Leave the area better than you found it. Don't litter - pack out what you pack in. Don't bother wildlife. Don't make your exhaust system noisier - complaints about noise are one of the biggest threats to the future of our sport. With every rider projecting a courteous and responsible attitude, riding areas can remain open for all to use in the future.

You or your riding club may want to volunteer to help your local land manager (usually the U.S. Forest Service, the Bureau of Land Management, or various state agencies) plan, build, and maintain the trail systems you use.

G. **Conclusion.**

In the off-highway environment, visibility and terrain conditions vary. The actions of other users or animals that you encounter on the trail are unpredictable. Your motorcycle's condition can change. These factors can best be dealt with by practicing the appropriate riding techniques and giving every ride your full attention.

FUEL AND OIL RECOMMENDATION

2

FUEL 2-2
ENGINE OIL 2-3

FUEL AND OIL RECOMMENDATION

FUEL

Your motorcycle requires regular unleaded gasoline with a minimum pump octane rating of 87 ((R+M)/2 method). In some areas, the only fuels that are available are oxygenated fuels.

Oxygenated fuels which meet the minimum octane requirement and the requirements described below may be used in your motorcycle without jeopardizing the New Vehicle Limited Warranty or the Emission Control System Warranty.

NOTE: Oxygenated fuels are fuels which contain oxygen-carrying additives such as MTBE or alcohol.

Gasoline Containing MTBE

Unleaded gasoline containing MTBE (Methyl Tertiary Butyl Ether) may be used in your motorcycle if the MTBE content is not greater than 15%. This oxygenated fuel does not contain alcohol.

Gasoline/Ethanol Blends

Blends of unleaded gasoline and ethanol (grain alcohol), also known as "GASOHOL", may be used in your vehicle if the ethanol content is not greater than 10%.

Gasoline/Methanol Blends

Fuels containing 5% or less methanol (wood alcohol) may be suitable for use in your motorcycle if they contain co-solvents and corrosion inhibitors.

DO NOT USE fuels containing more than 5% methanol under any circumstances. Fuel system damage or motorcycle performance problems resulting from the use of such fuels are not the responsibility of Suzuki and may not be covered under the New Vehicle Limited Warranty or the Emission Control System Warranty.

Fuel Pump Labeling

In some states, pumps that dispense oxygenated fuels are required to be labeled for the type and percentage of oxygenate, and whether important additives are present. Such labels may provide enough information for you to determine if a particular blend of fuel meets the requirements listed above. In other states, pumps may not be clearly labeled as to the content or type of oxygenate and additives. If you are not sure that the fuel you intend to use meets these requirements, check with the service station operator or the fuel supplier.

NOTE:

- *To help minimize air pollution, Suzuki recommends that you use oxygenated fuels.*
- *Be sure that any oxygenated fuel you use has octane ratings of at least 87 pump octane ((R+M)/2 method).*
- *If you are not satisfied with the driveability of your motorcycle when you are using an oxygenated fuel, or if engine pinging is experienced, substitute another brand as there are differences between brands.*

CAUTION

Spilling gasoline containing alcohol can harm your motorcycle. Alcohol can damage painted surfaces.

Be careful not to spill any fuel when filling the fuel tank. Wipe spilled gasoline up immediately.

ENGINE OIL

Oil quality is a major contributor to your engine's performance and life. Always select good quality engine oil. Suzuki recommends the use of SUZUKI PERFORMANCE 4 MOTOR OIL or equivalent engine oil. Use oil with an API (American Petroleum Institute) classification of SF/SG or SH/SJ, or with a JASO classification of MA.

SAE	API	JASO
10W-40	SF or SG	–
10W-40	SH or SJ	MA

API: American Petroleum Institute
JASO: Japanese Automobile Standards Organization

SAE Engine Oil Viscosity

Suzuki recommends the use of SAE 10W-40 engine oil. If SAE 10W-40 engine oil is not available, select an alternative according to the following chart.

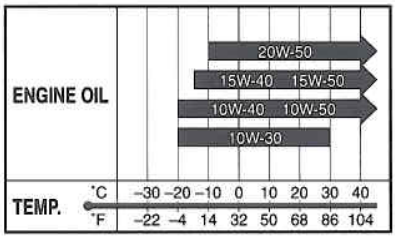

JASO T903

The JASO T903 standard is an index to select engine oils for 4-stroke motorcycle and ATV engines. Motorcycle and ATV engines lubricate clutch and transmission gears with engine oil. JASO T903 specifies performance requirements for motorcycle and ATV clutches and transmissions.

There are two classes, MA and MB. The oil container shows the classification as follows.

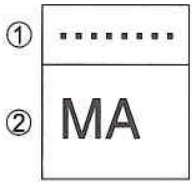

① Code number of oil sales company
② Oil classification

Energy Conserving

Suzuki does not recommend the use of "ENERGY CONSERVING" oils. Some engine oils which have an API classification of SH or higher have an "ENERGY CONSERVING" indication in the API classification doughnut mark. These oils can affect engine life and clutch performance.

Not recommended

Recommended

CONTROLS, EQUIPMENT AND ADJUSTMENTS

LOCATION OF PARTS 3-2
KEY 3-5
IGNITION SWITCH 3-5
INSTRUMENT PANEL 3-7
LEFT HANDLEBAR 3-8
RIGHT HANDLEBAR 3-10
FUEL TANK CAP 3-11
FUEL VALVE 3-12
GEARSHIFT LEVER 3-14
REAR BRAKE PEDAL 3-14
HELMET HOLDER 3-15
SIDE STAND 3-15
SUSPENSION ADJUSTMENT 3-16
SEAT HEIGHT CHANGE 3-17

CONTROLS, EQUIPMENT AND ADJUSTMENTS

LOCATION OF PARTS

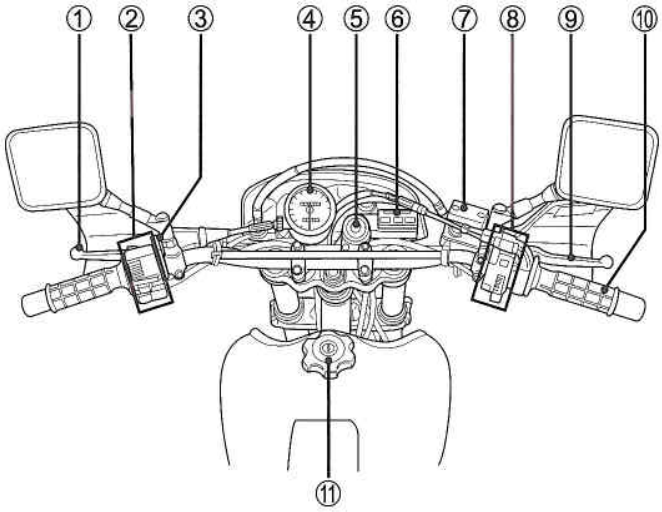

① Clutch lever
② Left handlebar switches
③ Choke lever
④ Speedometer
⑤ Ignition switch
⑥ Indicator lights
⑦ Front brake fluid reservoir
⑧ Right handlebar switches
⑨ Front brake lever
⑩ Throttle grip
⑪ Fuel tank cap

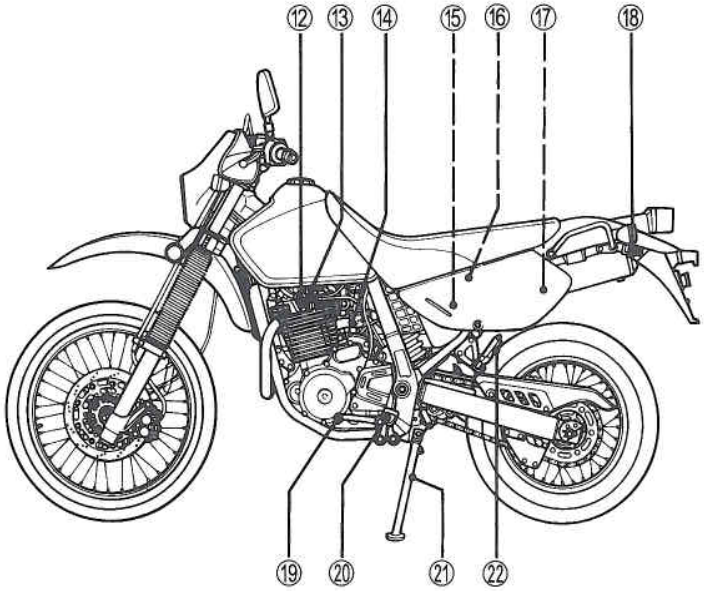

⑫ Spark plug
⑬ Fuel valve
⑭ Throttle stop screw
⑮ Air cleaner
⑯ Battery
⑰ Tools
⑱ Helmet holder
⑲ Gearshift lever
⑳ Footrests
㉑ Side stand
㉒ Passenger footrests

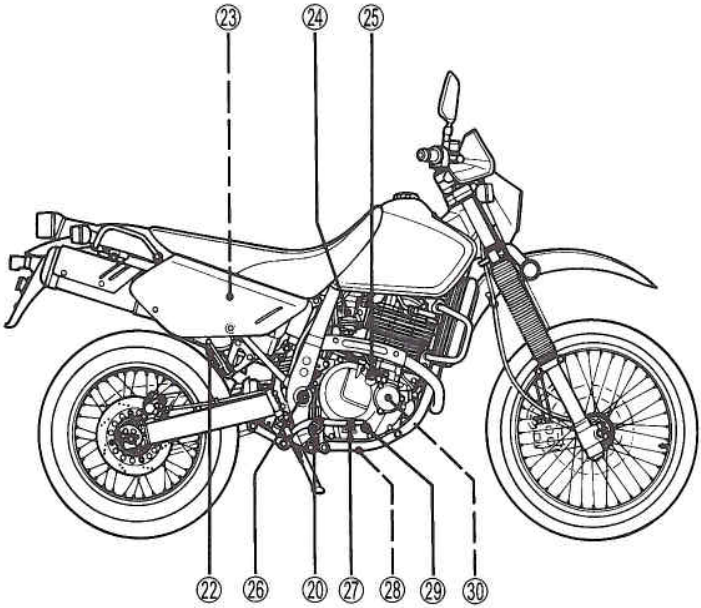

㉓ Fuses
㉔ Rear brake fluid reservoir
㉕ Engine oil filler cap
㉖ Rear brake light switch
㉗ Rear brake pedal
㉘ Engine oil drain plug
㉙ Engine oil inspection window
㉚ Engine oil filter

KEY

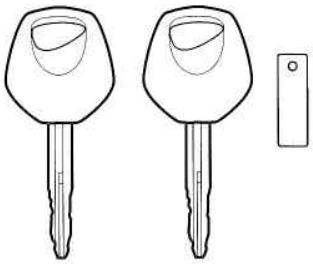

Two keys come with this motorcycle. Keep the spare key in a safe place. An identifying number is stamped on the plate. Use this number when making a replacement key.

Please write down your key number in the box provided for your future reference.

Key No.

IGNITION SWITCH

The ignition switch has 4 positions.

"OFF" position
All electrical circuits are off. The engine will not start. The key can be removed.

"ON" position
The ignition circuit is completed and the engine can run. The headlight and taillight will automatically turn on. The key cannot be removed in this position.

NOTE: Start the engine promptly after turning the ignition key to the "ON" position. The reason for this is that the headlight and taillight come on when the ignition is turned on and will cause the battery to lose power.

"LOCK" position
All electrical circuits are off. The key can be removed and the steering will be locked. Turn the steering all the way to the left and push down the key and turn it to the "LOCK" position.

"P" (PARKING) position
Taillight will come on to increase visibility for temporary road side parking at night. The key can be removed and the steering will be locked.

⚠WARNING

Turning the ignition switch to the "P" (PARKING) or "LOCK" position while the motorcycle is moving can be hazardous. Moving the motorcycle while the steering is locked can be hazardous. You could lose your balance and fall, or you could drop the motorcycle.

Stop the motorcycle and place it on the side stand before locking the steering. Never attempt to move the motorcycle when the steering is locked.

The key hole can be covered by turning the lid.

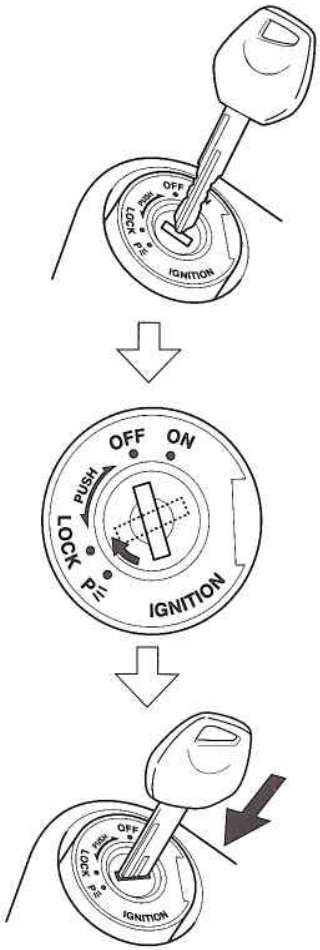

Align the lid hole position to the key hole position when inserting the key

INSTRUMENT PANEL

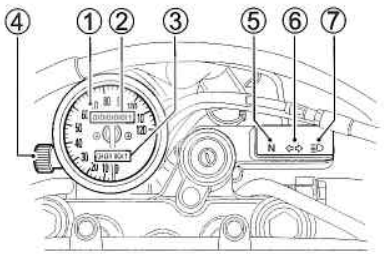

Speedometer ①
The speedometer indicates the road speed in kilometers per hour and miles per hour.

Odometer ②
The odometer registers the total distance that the motorcycle has been ridden.

Trip Meter ③
The trip meter is a resettable odometer located in the speedometer assembly. It can be used to indicate the distance traveled on short trips or between fuel stops. Turning **knob** ④ counterclockwise will return the meter to zero.

Neutral Indicator Light "N" ⑤
This green indicator light will come on when the transmission is in neutral. The light will go out when you shift into any gear other than neutral.

Turn Signal Indicator Light "⇦⇨" ⑥
When either the right or left turn signals are being operated, the indicator light will flash intermittently.

NOTE: If a turn signal light is not operating properly due to bulb filament or circuit failure, the indicator light flashes more quickly to notify the rider of the existence of a failure.

High Beam Indicator Light "≡D" ⑦
This blue indicator light will be lit when the headlight high beam is turned on.

LEFT HANDLEBAR

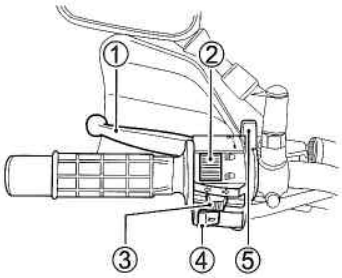

Clutch Lever ①
The clutch lever is used for disengaging the drive to the rear wheel when starting the engine or shifting transmission gears. Squeezing the lever disengage the clutch.

Dimmer Switch ②
"≡D" position
The headlight low beam and taillight turn on.

"≡D" position
The headlight high beam and taillight turn on. The high beam indicator light also turns on.

CAUTION

Holding the dimmer switch between "≡D" and "≡D" position will light both "≡D" and "≡D" headlight beam. This operation can damage the motorcycle.

Use the dimmer switch only at "≡D" or "≡D" position.

CAUTION

Sticking some tape or placing objects in front of the headlight can damage the headlight.

Do not stick any tapes to the headlight. Do not place objects in front of the headlight.

Turn Signal Switch "⇦⇨" ③
Moving the switch to the "⇦" position will flash the left turn signals. Moving the switch to the "⇨" position will flash the right turn signals. The indicator light will also flash intermittently. To cancel turn signal operation, push the switch in.

⚠WARNING

Failure to use the turn signals, and failure to turn off the turn signals can be hazardous. Other drivers may misjudge your course and this may result in an accident.

Always use the turn signals when you intend to change lanes or make a turn. Be sure to turn off the turn signals after completing the turn or lane change.

Horn Button "📯" ④
Press the button to operate the horn.

Choke Lever "⌇" ⑤
This motorcycle has a choke system to provide easy starting when the engine is cold. The choke system works by turning the choke lever all the way toward you. The choke system works best when the throttle is in the closed position. When the engine is warm, you do not need to use the choke system for starting.

NOTE: Refer to the STARTING THE ENGINE section of the manual for the engine starting procedure.

RIGHT HANDLEBAR

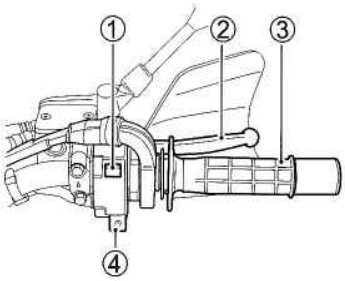

Engine Stop Switch ①
"⊗" position
The ignition circuit is off. The engine cannot start or run.

"Ω" position
The ignition circuit is on and the engine can run.

Front Brake Lever ②
Apply the front brake by squeezing the front brake lever towards the grip. The brake light will come on when the lever is squeezed.

Throttle Grip ③
Engine speed is controlled by the position of the throttle grip. Turn it toward you to increase engine speed. Turn it away from you to decrease engine speed.

Electric Starter Button "⊛" ④
Use this button to turn the starter motor. With the ignition switch in the "ON" position and the engine stop switch in the "Ω" position, and the transmission in neutral, pull in the clutch lever and push the electric starter button to start the engine.

NOTE: This motorcycle has a starter interlock system for the ignition and starter circuit. The engine can only be started if:

- *The transmission is in neutral and the clutch is disengaged, or*
- *The transmission is in gear, the side stand is fully up, and the clutch is disengaged.*

CAUTION

To prevent electrical system damage, do not operate the starter motor longer than five seconds at a time.

If the engine does not start after several attempts, check the fuel supply and ignition system. Refer to the TROUBLE-SHOOTING section in this manual.

FUEL TANK CAP

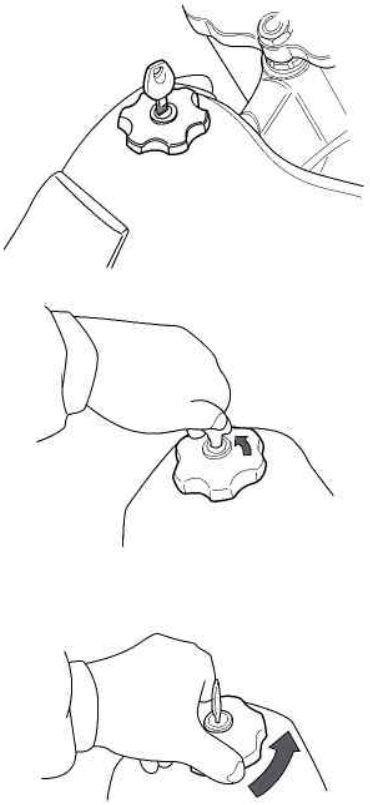

Except for California
To open the fuel tank cap, insert the ignition key and turn it counterclockwise. Turn the cap counterclockwise and remove it. To close the fuel tank cap, turn it clockwise. The key must be in the cap lock before installing the cap. Turn the key clockwise and remove it.

Only for California
To open the fuel tank cap, insert the ignition key into the lock and turn it clockwise. With the key still held in position, lift up the cap. To replace the cap, orient the cap and push the cap down firmly with the key in the cap lock.

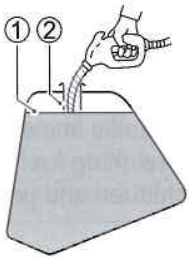

① Fuel level
② Filler neck

⚠WARNING

Overfilling the fuel tank can cause the fuel to overflow when it expands due to heat from the engine or the sun. Spilled fuel can catch on fire.

Never fill the fuel above the bottom of the filler neck.

⚠WARNING

Fuel and fuel vapor are highly flammable and toxic. You can be burned or poisoned when refueling.

- **Stop the engine and keep flames, sparks and heat sources away.**
- **Refuel only outdoors or in a well ventilated area.**
- **Do not smoke.**
- **Wipe up spills immediately.**
- **Avoid breathing fuel vapor.**
- **Keep children and pets away.**

FUEL VALVE

The fuel valve has three positions: "ON," "RES" and "PRI."

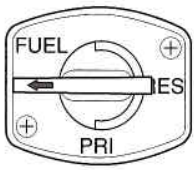

ON

"ON" position

The normal position for the fuel valve is in the "ON" position. In this position, no fuel will flow from the fuel valve to the carburetor unless the engine is running or being started.

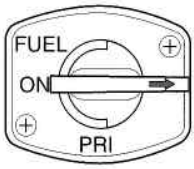

RES

"RES" (RESERVE) position
If the fuel level in the fuel tank becomes too low for the engine to operate with the fuel valve in the "ON" position, turn the lever to the "RES" position to use the reserve fuel supply. In this position, no fuel will flow from the fuel valve to the carburetor unless the engine is running or being started.

RESERVE FUEL SUPPLY: 3.0 L (0.8 US gal)

NOTE: After turning the fuel valve to the "RES" position, it is advisable that the tank be refilled at the closest gas station. After refueling, be sure to turn the fuel valve to the "ON" position.

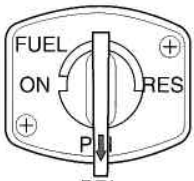

PRI

"PRI" (PRIME) position
If the motorcycle has run out of fuel or has been stored for an extended period, there may not be any gasoline in the carburetor. In this instance, the fuel valve should be turned to the "PRI" position. This will allow the fuel to flow directly into the carburetor even though the engine is not operating. Upon starting the engine, be sure to return the fuel valve to the "ON" position.

⚠WARNING

Leaving the fuel valve in the "PRI" position when the engine is off can be hazardous. The carburetor may overflow and fuel may run into the engine. This can cause a fire or cause severe damage when you start the engine.

Always leave the fuel valve in the "ON" or "RES" position.

GEARSHIFT LEVER

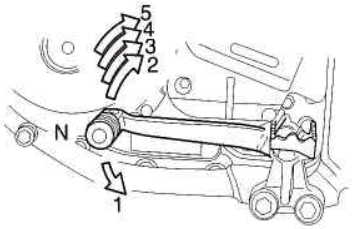

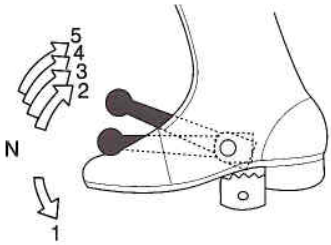

This motorcycle has a 5-speed transmission which operates as shown. To shift properly, pull the clutch lever and close the throttle at the same time you operate the gearshift lever. Lift the gearshift lever to upshift and depress the lever to downshift. Neutral is located between 1st and 2nd gear. When neutral is desired, depress or lift the lever halfway between 1st and 2nd gear.

NOTE: When the transmission is in neutral, the green indicator light on the instrument panel will be lit. However, even though the light is illuminated, cautiously and slowly release the clutch lever to make sure that the transmission is positively in neutral.

REAR BRAKE PEDAL

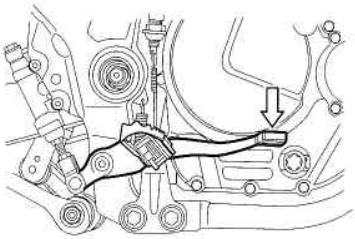

Pressing the rear brake pedal will apply the rear brake. The brake light will come on when the rear brake is operated.

HELMET HOLDER

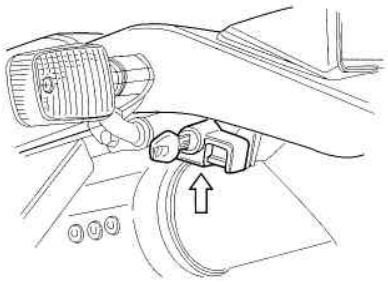

Insert the key into the lock, turn it clockwise and open the latch. Hook your helmet fastener ring to the latch and turn the key back to lock the holder.

⚠WARNING

Riding with a helmet fastened to the helmet holder can interfere with rider control.

Never carry a helmet fastened to a helmet holder. Fix the helmet securely atop the seat if you must carry it.

SIDE STAND

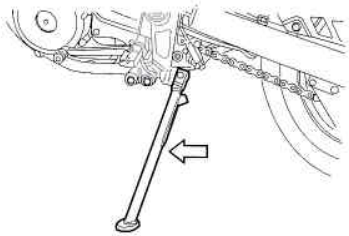

The motorcycle has a side stand. To place the motorcycle on the side stand, place your right foot on the end of the side stand and push down firmly until the stand pivots fully through its arc and comes to rest against its stop.

An interlock system is provided to cut off the ignition circuit when the side stand is down and the transmission is in any gear other than neutral. The side stand/ignition interlock system works as follows:

- If the side stand is down and the transmission is in gear, the engine can not be started.
- If the engine is running and the transmission is shifted into gear with the side stand down, the engine will stop running.
- If the engine is running and the side stand is put down with the transmission in gear, the engine will stop running.

⚠WARNING

Riding with the side stand incompletely retracted can result in an accident when you turn left.

- **Check operation of the side stand/ignition interlock system before riding.**
- **Always retract the side stand completely before starting off.**

CAUTION

Park the motorcycle on firm, level ground to help prevent it from falling over.

If you must park on an incline, aim the front of the motorcycle uphill and put the transmission into 1st gear to reduce the possibility of rolling off the side stand.

SUSPENSION ADJUSTMENT

REAR SUSPENSION

Spring Pre-load Adjustment

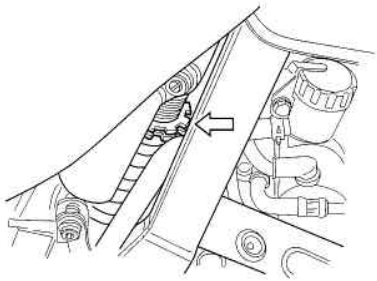

The adjustment can be performed by changing the adjuster ring position. However, Suzuki recommends that this adjustment be done by your authorized Suzuki dealer, since a special tool is needed for this job.

Damping Force Adjustment

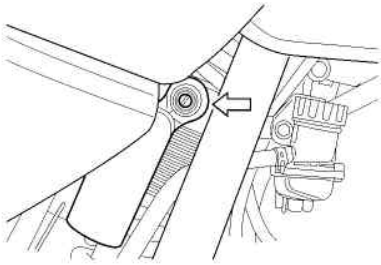

To change the damping force, turn the adjuster. As you turn the adjuster, you will notice the clicks. Count the number of clicks from the fully turned-in position. Turning the adjuster clockwise will increase the damping force and fully turned-in position provides the maximum damping force.

Turning the adjuster counterclockwise will decrease the damping force and fully turned-out position provides the minimum damping force. The damping force is set on 8 clicks position at the factory.

SEAT HEIGHT CHANGE

For rider preference, the seat height can be lowered about 40 mm (1.6 in) from its original seat height.

To change the seat height, the front suspension, the rear suspension and the side stand must be changed, following the specified procedure. This change requires special tools, detailed information and mechanical experience. The side stand must be replaced with the shorter, silver-colored, optional one. Ask your authorized Suzuki dealer to perform this service or to restore a seat height to its original height.

⚠WARNING

Attempting to change the seat height yourself can be hazardous. Improperly modified suspension can cause poor riding stability and loss of control which can result in an accident. Failure to replace the side stand with the shorter, silver-colored one can cause the motorcycle to fall over when parking.

Ask your authorized Suzuki dealer to perform this change.

BREAK-IN AND INSPECTION BEFORE RIDING

BREAK-IN 4-2
INSPECTION BEFORE RIDING 4-3

BREAK-IN AND INSPECTION BEFORE RIDING

BREAK-IN

The first 800 km (500 miles) is the most important in the life of your motorcycle. Proper operation during this break-in period will help assure maximum life and performance from your new motorcycle. The following guidelines explain proper break-in procedures.

Maximum Throttle Opening Recommendation

The table below shows the maximum throttle opening recommendation during the break-in period.

Initial	800 km (500 miles)	Less than 1/2 throttle
Up to	1600 km (1000 miles)	Less than 3/4 throttle

Vary the Engine Speed

Vary the engine speed during the break-in period. This allows the parts to "load" (aiding the mating process) and then "unload" (allowing the parts to cool). Although it is essential to place some stress on the engine components during break-in, you must be careful not to load the engine too much.

Allow the Engine Oil to Circulate before Riding

Allow enough idling time after warm or cold engine start-up before revving the engine or placing the transmission in gear. This allows time for the lubricating oil to reach all critical engine components.

Observe Your Initial and Most Critical Service

The initial service (break-in maintenance) is the most important service your motorcycle will receive. During break-in operation, all of the engine components will have mated together and seated. Maintenance required as part of the initial service includes correction of all adjustments, tightening of all fasteners and replacement of dirty oil. Timely performance of this service will help make sure you get the best service life and performance from the engine.

INSPECTION BEFORE RIDING

⚠WARNING

Failure to inspect and maintain your motorcycle properly increases the chance of an accident or equipment damage.

Always perform a pre-ride inspection before each ride. Refer to the table on page 4-4 for check items. For further details, refer to the INSPECTION AND MAINTENANCE section.

⚠WARNING

Using worn, improperly inflated, or incorrect tires will reduce stability and can cause an accident.

Follow all instructions in the TIRES section in this owner's manual.

Check the condition of the motorcycle to help make sure that you do not have mechanical problems or get stranded somewhere when you ride. Before riding the motorcycle, be sure to check the following items. Be sure your motorcycle is in good condition for the personal safety of the rider, passenger and protection of the motorcycle.

⚠WARNING

Checking maintenance items when the engine is running can be hazardous. You could be injured if your hands or clothing gets caught in moving parts.

Shut the engine off when performing maintenance checks, except when checking the engine stop switch and throttle.

WHAT TO CHECK	CHECK FOR
Steering	• Smoothness • No restriction of movement • No play or looseness
Brakes	• Proper pedal and lever operation • Correct fluid level • No fluid leakage • No "sponginess" • Proper pedal and lever play • Brake pad wear
Tires	• Proper pressure • Enough tread depth • No cracks, rips, or other damage
Fuel tank	Tank cap locked securely
Lighting	Proper operation of all lights – Headlight, Taillight, Brake light, Instrument lights, Turn signals, License plate light
Indicator lights	Proper operation of all lights – High beam, Neutral, Turn signal
Engine stop switch	Proper operation
Horn	Correct function
Engine oil	Correct level
Throttle	• Proper play • Smooth response • Quick return to idle position
Gearshift lever	• No damage • Smooth operation
Drive chain	• Proper tension • Adequate lubrication • No excessive wear or damage
Side stand/ ignition interlock system	Proper operation
General condition	• Bolts and nuts tightness • No rattle from any parts of machine with the engine running • No visible evidence of damage

RIDING TIPS

STARTING THE ENGINE 5-2
STARTING OFF AND SHIFTING 5-3
USING THE TRANSMISSION 5-4
RIDING ON HILLS 5-5
STOPPING AND PARKING 5-6
CARRYING A PASSENGER 5-7

RIDING TIPS

STARTING THE ENGINE

Before attempting to start the engine, make sure:

- The transmission is in neutral.
- The fuel valve is in the "ON" position.
- The engine stop switch is in the "Ω" position.

NOTE: This motorcycle has interlock switch for the ignition circuit. The engine can only be started if:

- *The transmission is in neutral and the clutch is disengaged, or*
- *The transmission is in gear, the side stand is fully up, and the clutch is disengaged.*

When the Engine Is Cold:

1. Turn the choke lever toward you.
2. **With the throttle grip in the fully closed position,** push the electric starter button.
3. Immediately after the engine starts, keep the engine speed at 1800 – 2000 r/min by varying the choke lever position.
4. Move the choke lever to the "OFF" position approximately 30 seconds after engine starts. It may be necessary to use the choke longer than 30 seconds in extremely cold weather.

NOTE: Opening the throttle grip when starting the engine will make the engine hard to start.

When a cold Engine Is Hard to Start:

1. Turn the choke lever toward you.
2. **With the throttle grip opened 1/8 to 1/4,** push the electric starter button.
3. Immediately after the engine starts, keep the engine speed at 1800 – 2000 r/min by varying the choke lever positions.
4. Move the choke lever to the "OFF" position approximately 30 seconds after engine starts. It may be necessary to use the choke longer than 30 seconds in extremely cold weather.

When the Engine Is Warm:

1. Confirm that the choke lever is in the "OFF" position.
2. **With the throttle grip in the fully closed position,** push the electric starter button.

NOTE: Operation of the choke system is usually not necessary when the engine is warm.

When a Warm Engine Is Hard to Start:

1. Confirm that the choke lever is in the "OFF" position.
2. **With the throttle grip opened 1/8 to 1/4,** push the electric starter button.

⚠WARNING

Running the engine indoors or in a garage can be hazardous. Exhaust gas contains carbon monoxide, a gas that is colorless and odorless and can cause death or severe injury.

Only run the engine outdoors where there is fresh air.

CAUTION

Running the engine too long without riding may cause the engine to overheat. Overheating can result in damage to internal engine components and discoloration of exhaust pipes.

Shut the engine off if you cannot begin your ride promptly.

STARTING OFF AND SHIFTING

⚠WARNING

Riding this motorcycle at excessive speed increases your chances of losing control of the motorcycle. This may result in an accident.

Always ride within the limits of your skills, your motorcycle, and the riding conditions.

⚠WARNING

Removing your hands from the handlebars or feet from the footrests during operation can be hazardous. If you remove even one hand or foot from the motorcycle, you can reduce your ability to control the motorcycle.

Always keep both hands on the handlebars and both feet on the footrests of your motorcycle during operation.

⚠ WARNING

Sudden side winds, which can occur when being passed by larger vehicles, at tunnel exits or in hilly areas, can upset your control.

Reduce your speed and be alert to side winds.

Make sure that the side stand is in the fully up position. Pull the clutch lever in and pause momentarily. Engage first gear by depressing the gearshift lever downward. Turn the throttle grip toward you and at the same time release the clutch lever gently and smoothly. As the clutch engages, the motorcycle will start moving forward. To shift to the next higher gear, accelerate gently, then close the throttle and pull the clutch lever in simultaneously. Lift the gear shift lever upward to select the next gear and release the clutch lever as you open the throttle again. Select the higher gears in this manner until top gear is reached.

NOTE: This motorcycle has a side stand/ignition interlock switch. If you shift the transmission into gear when the side stand is down, the engine will stop running.

USING THE TRANSMISSION

The transmission is provided to keep the engine operating smoothly in its normal operating speed range. The gear ratios have been carefully chosen to meet the characteristics of the engine. The rider should always select the most suitable gear for the prevailing conditions. Never slip the clutch to control road speed, but rather downshift to allow the engine to run within its normal operational range. The table below shows the shifting point for each gear.

Shifting up schedule

Gear position	km/h	miles/h
1st → 2nd	20	12
2nd → 3rd	30	19
3rd → 4th	40	25
4th → 5th	50	31

Shifting down schedule

Gear position	km/h	miles/h
5th → 4th	35	22
4th → 3rd	25	16
3rd → 2nd	20	12

Disengage the clutch when the motorcycle speed drops below 20 km/h (12 miles/h).

⚠ WARNING

Downshifting when engine speed is too high can:

- **cause the rear wheel to skid and lose traction due to increased engine braking, resulting in an accident; or**
- **force the engine to overrev in the lower gear, resulting in engine damage.**

Reduce speed before downshifting.

⚠ WARNING

Downshifting while the motorcycle is leaned over in a corner may cause rear wheel skid and loss of control.

Reduce your speed and downshift before entering a corner.

RIDING ON HILLS

- When climbing steep hills, the motorcycle may begin to slow down and show lack of power. At this point, you should shift to a lower gear so that the engine will again be operating in its normal power range. Shift rapidly to prevent the motorcycle from losing momentum.
- When riding down a steep hill, the engine may be used for braking by shifting to a lower gear.
- Be careful, however, not to allow the engine to overrev.

STOPPING AND PARKING

1. Turn the throttle grip away from you to close the throttle completely.
2. Apply the front and rear brakes evenly and at the same time.
3. Downshift through the gears as motorcycle speed decreases.
4. Select neutral with the clutch lever squeezed towards the grip (disengaged position) just before the motorcycle stops. The neutral position can be confirmed by observing the neutral indicator light.

⚠ WARNING

Inexperienced riders tend to underutilize the front brake. This can cause excessive stopping distance and lead to a collision. Using only the front or rear brake can cause skidding and loss of control.

Apply both brakes evenly and at the same time.

⚠ WARNING

Hard braking while turning may cause wheel skid and loss of control.

Brake before you begin to turn.

⚠ WARNING

Hard braking on wet, loose, rough, or other slippery surfaces can cause wheel skid and loss of control.

Brake lightly and with care on slippery or irregular surfaces.

⚠ WARNING

Following another vehicle too closely can lead to collision. As vehicle speeds increase, stopping distance increases progressively.

Be sure you have a safe stopping distance between you and the vehicle in front of you.

5. Park the motorcycle on a firm, flat surface where it will not fall over.
6. Turn the ignition switch to the "OFF" position.
7. Turn the handlebars all the way to the left and lock the steering for security.
8. Remove the ignition key.

NOTE: If an optional anti-theft lock such as U-shape lock, brake disk lock and chain is used to avoid theft, be sure to remove anti-theft lock before moving the motorcycle.

⚠WARNING

A hot muffler can burn you. The muffler will be hot enough to burn you for some time after stopping the engine.

Park the motorcycle where pedestrians or children are not likely to touch the muffler.

CARRYING A PASSENGER

Before you invite someone to be a passenger on your motorcycle, you need to be thoroughly familiar with motorcycle operation. Adjust tire pressures and suspension according to the Tire Pressure and Loading section and the Suspension section of this manual.

The passenger should always hold onto your waist or hips, or onto the seat strap or grab bar, as equipped. Ask your passenger not to make any sudden movements. When you lean going around a corner, the passenger should lean with you. The passenger should always keep his or her feet on the footrests, even when you are stopped at a light.

To help prevent burn injuries, warn your passenger not to contact the muffler when mounting or dismounting your motorcycle.

Although your Dual Sport motorcycle is equipped to carry a passenger, carrying a passenger or cargo while riding in rough terrain could be hazardous. Carrying a passenger or strapping cargo to the passenger seat can greatly reduce your ability to balance and steer the motorcycle and deal with quickly changing off-road conditions. Ride at a reduced speed and limit your off-road riding to smooth, level surfaces when carrying a passenger or cargo.

⚠ WARNING

Carrying a passenger or attaching cargo to the seat can greatly reduce your ability to balance and steer this motorcycle on rough terrain. You may need the full length of the seat to change position to maneuver the motorcycle and deal with quickly changing off-road conditions, and a passenger or cargo may interfere with your movement. If you lose control of the motorcycle, both you and the passenger can be severely injured.

Never carry a passenger or cargo on the seat when riding on rough terrain. Reduce your speed and avoid uneven surfaces, hills, narrow trails, and other rough terrain when you carry a passenger or cargo off-road.

ACCESSORY USE AND MOTORCYCLE LOADING

MODIFICATION 6-4

6

ACCESSORY USE AND MOTORCYCLE LOADING

There are a great variety of accessories available to Suzuki owners. Suzuki can not have direct control over the quality or suitability of accessories you may wish to purchase. The addition of unsuitable accessories can lead to unsafe operating conditions. It is not possible for Suzuki to test each accessory on the market or combinations of all the available accessories; however, your dealer can assist you in selecting quality accessories and installing them correctly.

Use extreme caution when selecting and installing the accessories for your Suzuki. We have developed some general guidelines which will aid you when deciding whether, and how to equip your motorcycle.

⚠WARNING

Improper accessories or modifications can make your motorcycle unsafe and can lead to an accident.

Never modify the motorcycle with improper or poorly installed accessories. Follow all instructions in this owner's manual regarding accessories and modifications. Use genuine SUZUKI accessories or equivalent that have been designed and tested for your motorcycle. Consult your SUZUKI dealer if you have any questions.

- Never exceed the GVWR (Gross Vehicle Weight Rating) of this motorcycle. The GVWR is the combined weight of the machine, accessories, payload, rider and passenger. When selecting your accessories, keep in mind the weight of the riders as well as the weight of the accessories. The additional weight of the accessories may not only create an unsafe riding condition but may also affect the steering ease.

GVWR: 350 kg (770 lbs) at the tire pressure (cold)
Front: 175 kPa (25 psi, 1.75 kgf/cm^2)
Rear: 200 kPa (29 psi, 2.00 kgf/cm^2)

- Any time that additional weight or aerodynamic affecting accessories are installed, they should be mounted as low as possible, as close to the motorcycle and as near the center of gravity as is feasible. The mounting brackets and other attachment hardware should be carefully checked to ensure that they provide for a rigid mount. Weak mounts can allow the shifting of the weight and create a hazardous, unstable condition.
- Inspect for proper ground clearance and bank angle. Improperly mounted load could critically reduce these two safety factors. Also determine that the load does not interfere with the operation of the suspension, steering or other control operations.
- Accessories fitted to the handlebars or the front fork area can create serious stability problems. This extra weight will cause the motorcycle to be less responsive to your steering control. The weight may also cause oscillations in the front end and lead to instability problems. Accessories added to the handlebars or front fork of the machine should be as light as possible and kept to a minimum.
- Backrests, saddlebags, travel trunks, etc., may affect the stability of the motorcycle due to their aerodynamic effects. The motorcycle may be affected by a lifting condition or by an instability in cross winds or when being passed by or passing large vehicles. Improperly mounted or poorly designed accessories can result in an unsafe riding condition, therefore caution should be used when selecting and installing all accessories.
- Certain accessories displace the rider from his or her normal riding position. This limits the freedom of movement of the rider and may limit control ability.
- Additional electrical accessories may overload the existing electrical system. Severe overloads may damage the wiring harness or create a hazardous situation due to the loss of electrical power during the operation of the motorcycle.

When carrying a load on the motorcycle, mount it as low as possible and as close as possible to the machine. An improperly mounted load can create a high center of gravity which is very hazardous and makes the motorcycle difficult to handle. The size of the load can also affect the aerodynamics of the motorcycle. Balance the load between the right and left sides of the motorcycle and fasten it securely.

⚠WARNING

Carrying a passenger or attaching cargo to the seat can greatly reduce your ability to balance and steer this motorcycle on rough terrain. You may need the full length of the seat to change position to maneuver the motorcycle and deal with quickly changing off-road conditions, and a passenger or cargo may interfere with your movement. If you lose control of the motorcycle, both you and the passenger can be severely injured.

Never carry passenger or cargo on the seat when riding on rough terrain. Reduce your speed and avoid uneven surfaces, hills, narrow trails, and other rough terrain when you carry a passenger or cargo off-road.

MODIFICATION

Modification of the motorcycle, or removal of original equipment may render the vehicle unsafe or illegal. Obey all applicable equipment regulations in your area.

INSPECTION AND MAINTENANCE

NOTICE 7-2
MAINTENANCE SCHEDULE 7-2
TOOLS 7-5
GENERAL LUBRICATION 7-5
FRAME COVER AND SEAT REMOVAL 7-6
BATTERY 7-7
AIR CLEANER 7-8
AIR CLEANER DRAIN CAP 7-11
SPARK PLUGS 7-12
ENGINE OIL 7-14
CARBURETOR 7-17
FUEL HOSE 7-19
CLUTCH ADJUSTMENT 7-19
DRIVE CHAIN 7-20
BRAKES 7-23
TIRES 7-27
SPOKE NIPPLE TIGHTNESS 7-29
SPARK ARRESTER 7-30
SIDE STAND/IGNITION INTERLOCK SYSTEM 7-31
FRONT WHEEL REMOVAL 7-32
REAR WHEEL REMOVAL 7-33
LIGHT BULB REPLACEMENT 7-35
FUSE 7-39

INSPECTION AND MAINTENANCE

NOTICE

MAINTENANCE, REPLACEMENT OR REPAIR OF THE EMISSION CONTROL DEVICES AND SYSTEMS MAY BE PERFORMED BY ANY MOTORCYCLE REPAIR ESTABLISHMENT OR INDIVIDUAL USING ANY MOTORCYCLE PART WHICH HAS BEEN CERTIFIED UNDER THE PROVISIONS IN THE CLEAN AIR ACT Sec. 207 (a)(2).

MAINTENANCE SCHEDULE

It is very important to inspect and maintain your motorcycle regularly. Follow the guidelines in the chart. The intervals between periodic services in kilometers, miles and months are shown. At the end of each interval, be sure to perform the maintenance listed.

⚠WARNING

Improper maintenance or failure to perform recommended maintenance increases the chance of an accident or motorcycle damage.

Always follow the inspection and maintenance recommendations and schedules in this owner's manual. Ask your SUZUKI dealer or a qualified mechanic to do the maintenance items marked with an asterisk (*). You may perform the unmarked maintenance items by referring to the instructions in this section, if you have mechanical experience. If you are not sure how to do any of the jobs, have your SUZUKI dealer or a qualified mechanic do them.

⚠WARNING

Running the engine indoors or in a garage can be hazardous. Exhaust gas contains carbon monoxide, a gas that is colorless and odorless and can cause death or severe injury.

Only run the engine outdoors where there is fresh air.

NOTE: The MAINTENANCE CHART specifies the minimum requirements for maintenance. If you use your motorcycle under severe conditions, perform maintenance more often than shown in the chart. If you have any questions regarding maintenance intervals, consult your SUZUKI dealer or a qualified mechanic.

CAUTION

Using poor quality replacement parts can cause your motorcycle to wear more quickly and may shorten its useful life.

Use only genuine Suzuki replacement parts or their equivalent.

MAINTENANCE CHART

This interval should be judged by odometer reading or number of months, whichever comes first.

Item \ Interval	km	1000	6000	12000	18000	24000
	mile	600	4000	7500	11000	14500
	months	2	12	24	36	48
* Valve clearance		I	–	I	–	I
Spark plugs		–	I	R	I	R
Air cleaner element		Clean every 3000 km (2000 miles)				
Idle speed		I	I	I	I	I
Fuel line		I	I	I	I	I
		*Replace every 4 years				
Clutch		I	I	I	I	I
* Fuel valve strainer		–	–	C	–	C
Engine oil		R	R	R	R	R
Engine oil filter		R	–	R	–	R
Drive chain		I	I	I	I	I
		Clean and lubricate every 1000 km (600 mile)				
* Brakes		I	I	I	I	I
Brake hoses		–	I	I	I	I
		*Replace every 4 year				
Brake fluid		–	I	I	I	I
		*Replace every 2 year				
* Steering		I	–	I	–	I
* Front fork		–	–	I	–	I
* Rear suspension		–	–	I	–	I
Tires		–	I	I	I	I
Spark arrester		Clean every 6000 km (4000 miles)				
* Exhaust pipe bolts and muffler bolts		T	–	T	–	T
* Chassis nuts and bolts		T	T	T	T	T

NOTE: I=Inspect and clean, adjust, replace or lubricate as necessary, R=Replace, T=Tighten, C=Clean

TOOLS

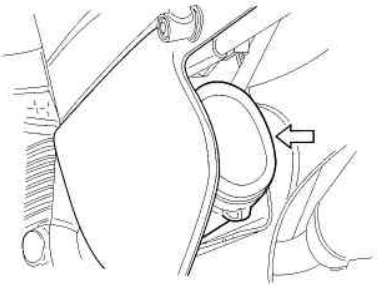

A tool kit is provided with your motorcycle. It is located inside of the left frame cover.

GENERAL LUBRICATION

Proper lubrication is important for safe, smooth operation and a long life for your motorcycle. Be sure that all lubrication is performed during periodic maintenance on the motorcycle. Increase frequency when you use your motorcycle in severe conditions.

CAUTION

Lubricating switches can damage the switches.

Do not apply grease and oil to the switches.

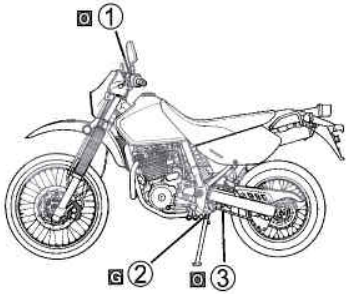

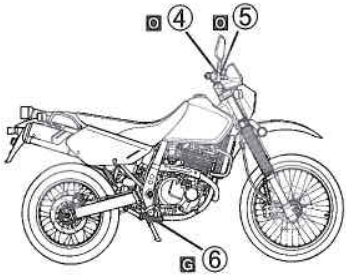

①.... Clutch lever holder and clutch cable
②.... Side stand pivot and spring hook
③.... Drive chain
④.... Throttle cable
⑤.... Brake lever holder
⑥.... Brake pedal pivot

O .... Motor oil
G .... Grease

FRAME COVER AND SEAT REMOVAL

The frame covers and the seat can be removed when servicing some parts of your motorcycle. When removing them, follow the procedure below:

1. Place the motorcycle on the side stand.

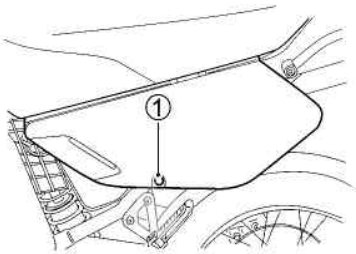

2. Loosen screws ① on the right and left frame covers and remove the frame covers.

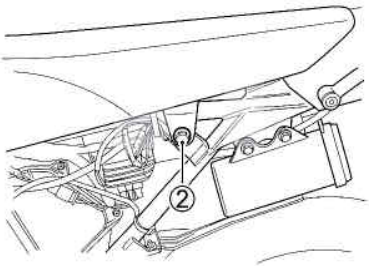

3. Loosen bolts ② on the right and left sides and remove the seat by sliding rearward.

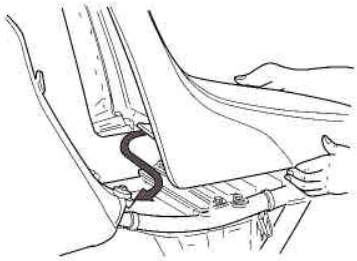

To reinstall the seat, slide the seat hook into the seat hook retainer on the frame, then tighten the bolts securely.

⚠WARNING

Failure to install the seat properly could allow the seat to move and cause loss of rider control.

Latch the seat securely in its proper position.

BATTERY

The battery is located under the seat. This battery is a sealed type battery and requires no maintenance. The standard charging rate is 0.9A × 5 to 10 hours and the maximum rate is 4.0A × 1 hour.

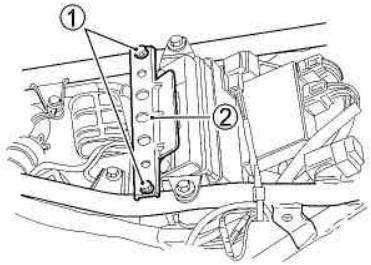

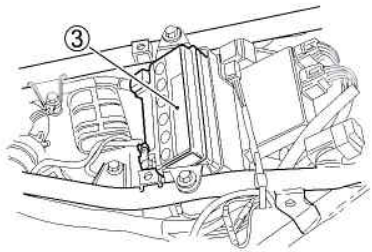

1. Remove the bolts ①.
2. Remove the seat support ②.
3. Remove the battery terminals and the battery ③.

⚠WARNING

Battery posts terminals, and related accessories contain lead and lead compounds.

Wash hands after handling.

⚠WARNING

Hydrogen gas produced by batteries can explode if exposed to flames or sparks.

Keep flames and sparks away from the battery. Never smoke when working near the battery.

CAUTION

Exceeding the maximum charging rate for the battery can shorten its life.

Never exceed the maximum charging rate.

CAUTION

Reversing the battery lead wires can damage the charging system and the battery.

The red lead must go to the (+) positive terminal and the black (or black with white tracer) lead must go to the (–) negative terminal.

AIR CLEANER

The air cleaner element must be kept clean to provide good engine power and gas mileage. If you use your motorcycle under normal low-stress conditions, you should service the air cleaner at the intervals specified. If you ride in dusty, wet, or muddy conditions, you will need to inspect the air cleaner element much more frequently. Use the following procedure to remove the element and inspect it.

⚠WARNING

Operating the engine without the air cleaner element in place could allow a flame to spit back from the engine to the air cleaner, or could allow dirt to enter the engine. This could cause a fire or severe engine damage.

Never run the engine without the air cleaner element properly installed.

CAUTION

Clean or replace the air cleaner element frequently if the motorcycle is used in dusty, wet or muddy conditions. The air cleaner element will clog under these conditions, and this may cause engine damage, poor performance, and poor fuel economy.

Clean the air cleaner case and element immediately if water gets in the air cleaner box.

Removing the Element

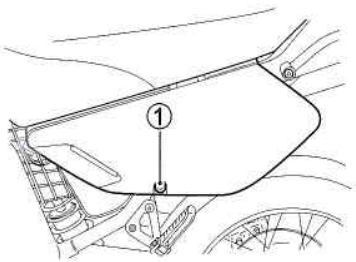

1. Loosen the screw ① and remove the left side frame cover.

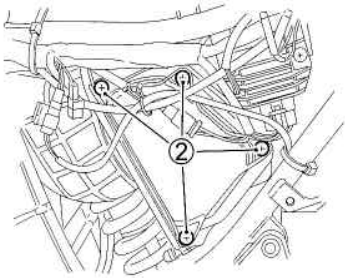

2. Loosen the screws ② and remove the cleaner case cover.

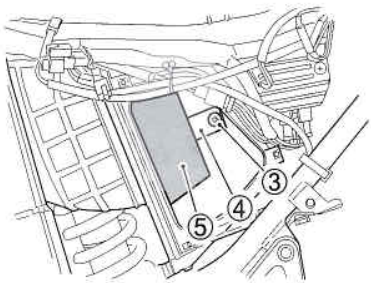

3. Loosen the screw ③ and remove the element support ④. Take out the element assembly ⑤.

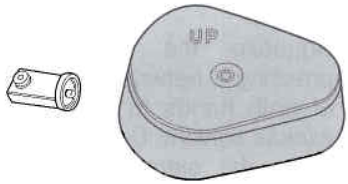

4. Separate the polyurethane foam element from the frame.

Washing the Element
Wash the element as follows:

1. Fill a wash pan larger than the element with a non-flammable cleaning solvent Ⓐ. Dip the element in the solvent and wash it.
2. Squeeze the element by pressing it between the palms of both hands to remove the excess solvent. Do not twist or wring the element, or it will develop cracks.
3. Dry the element.
4. Put the element in a plastic bag. Pour in some motor oil Ⓑ and work the oil into the element.
5. Squeeze the element to remove excess oil.

⚠WARNING

New and used oil and solvent can be hazardous. Children and pets may be harmed by swallowing new or used oil or solvent. Repeated, prolonged contact with used engine oil may cause skin cancer. Brief contact with used oil or solvent may irritate skin.

- **Keep new and used oil and solvent away from children and pets.**
- **Wear a long-sleeve shirt and waterproof gloves.**
- **Wash with soap if oil or solvent contacts your skin.**

NOTE: Recycle or properly dispose of used oil and solvent.

CAUTION

A torn air cleaner element will allow dirt to enter the engine and can damage the engine.

Carefully examine the air cleaner element for tears during cleaning. Replace it with a new one if it is torn.

6. Clean any dirt or debris from inside the air cleaner case. Be sure no dirt enters the carburetor.

Replacing the Element
Reinstall the cleaner element in reverse order of removal. Be sure that the element is securely in position and is properly sealed.

CAUTION

Failure to position the air cleaner element properly can allow dirt to bypass the air cleaner element. This will cause engine damage.

Be sure to properly install the air cleaner element.

AIR CLEANER DRAIN CAP

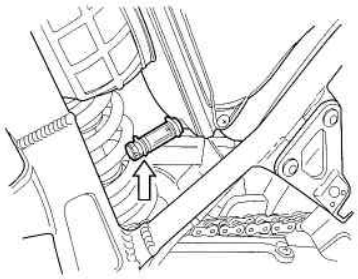

Remove the cap and drain water and oil when cleaning the air cleaner element.

SPARK PLUGS

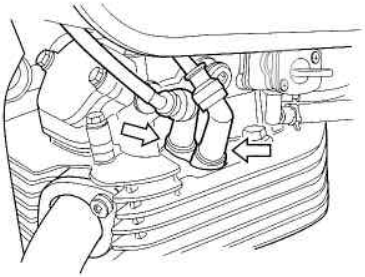

Your motorcycle comes equipped with DENSO U31ESR-N or NGK CR10E spark plugs. To determine if the standard spark plug is right for your usage, check the color of the plug's porcelain center electrode insulator after motorcycle operation. A light brown color indicates that the plug is correct. A white or dark insulator indicates that the engine may need adjustment, or another plug type may be needed. Consult your Suzuki dealer or a qualified mechanic if your plug insulator is not a light brown color.

NOTE: This motorcycle uses resistor-type spark plug to avoid jamming electronic parts. Improper spark plug selection may cause electronic interference with your motorcycle's ignition system, resulting in motorcycle performance problems. Use only the recommended spark plugs.

CAUTION

An improper spark plug may have an incorrect fit or heat range for your engine. This may cause severe engine damage which will not be covered under warranty.

Use one of the spark plugs listed below or equivalent. Consult your Suzuki dealer or a qualified mechanic if you are not sure which spark plug is correct for your type of usage.

NGK	DENSO	REMARKS
CR9E	U27ESR-N	If the standard plug tends to run cold.
CR10E	U31ESR-N	Standard

NOTE: If the above-named plugs are not available, consult your Suzuki dealer.

CAUTION

A crossthreaded or overtightened spark plug will damage the aluminum threads of the cylinder head.

Follow the procedure below to tighten the spark plug properly.

Carefully turn the spark plug by hand into the threads until it is finger tight. If the spark plug is new, tighten it with a wrench about 1/2 turn past finger tight. If you are reusing the old spark plug, tighten it with a wrench about 1/8 turn past finger tight.

CAUTION

Dirt can damage your engine if it enters an open spark plug hole.

Cover the spark plug hole whenever spark plug is removed.

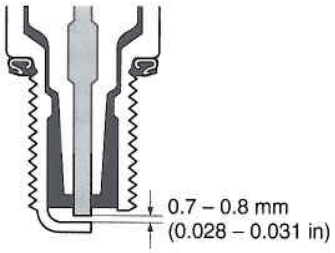

To maintain a hot, strong spark, keep the plug free from carbon. Remove carbon deposits from the plug, and adjust the gap to 0.7 – 0.8 mm (0.028 – 0.031 in) for good ignition. Use a thickness (feeler) gauge to check the gap.

ENGINE OIL

Engine life depends on oil amount and quality. Daily oil level checks and periodic changes are two of the most important maintenance items to be performed.

Engine Oil Level Check

Check the engine oil level as follows:

1. Start the engine and allow it to idle for a few minutes.
2. Stop the engine and wait approximately three minutes.

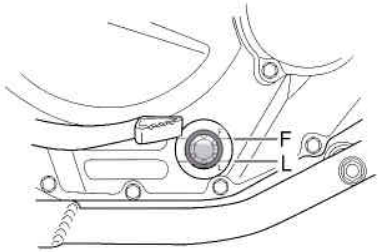

3. Hold the motorcycle vertically and check the oil level through the oil level inspection window. The engine oil level should be between "L" (low) and "F" (full) lines.

CAUTION

The engine oil level must be between the "L" (Low) line and "F" (Full) line, or engine damage may occur.

Check the oil level, through the inspection window, with the motorcycle held vertically on level ground before each use of the motorcycle.

Engine Oil and Filter Change
Change the engine oil and oil filter at the scheduled times. The engine should always be warm when the oil is changed so the oil will drain easily. The procedure is as follows:

1. Place the motorcycle on the side stand.

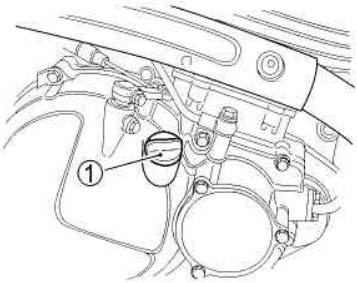

2. Remove the oil filler cap ①.

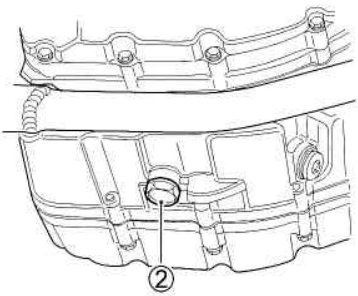

3. Remove the drain plug ② from the bottom of the engine and drain the engine oil into a drain pan.

⚠WARNING

Engine oil and exhaust pipes can be hot enough to burn you.

Wait until the oil drain plug and exhaust pipes are cool enough to touch with bare hands before draining oil.

⚠ WARNING

New and used oil can be hazardous. Children and pets may be harmed by swallowing new or used oil. Repeated, prolonged contact with used engine oil may cause skin cancer. Brief contact with used oil may irritate skin.

- **Keep new and used oil away from children and pets.**
- **Wear a long-sleeve shirt and waterproof gloves.**
- **Wash with soap if oil contacts your skin.**

NOTE: Recycle or properly dispose of used oil.

NOTE: Hold the motorcycle vertically while draining the engine oil to drain all oil.

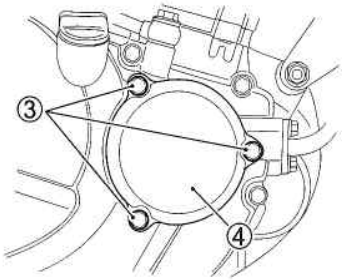

4. Remove the three bolts ③ holding the filter cover ④ in place.

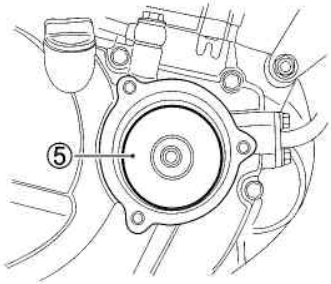

5. Remove the filter cover ④ and pull out the old filter element ⑤. Insert the new filter in the same position.

CAUTION

Using an oil filter with the wrong design can cause engine damage.

Use a genuine SUZUKI oil filter or an equivalent filter designed for your motorcycle.

CAUTION

Failure to insert the new element correctly can damage the engine. No oil flow will result if the element is inserted backwards.

Insert the open end of the new oil filter element into the engine.

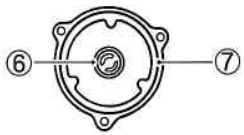

6. Check to be sure that the filter spring ⑥ and the cap "O" ring ⑦ are installed correctly.

NOTE: Install a new "O" ring each time the filter element is replaced.

7. Reinstall the oil filter cover and tighten the bolts securely.
8. Reinstall the drain plug and tighten it securely. Pour about 2400 ml (2.5 US qt) of the specified oil in the filler hole. (See FUEL AND OIL RECOMMENDATION section.)

NOTE: About 2300 ml (2.4 US qt) of oil will be required when changing oil only.

9. Reinstall the oil filler cap.

CAUTION

Engine damage may occur if you use oil that does not meet Suzuki's specifications.

Use the oil specified in the FUEL AND OIL RECOMMENDATION section.

10. Start the engine (while the motorcycle is outside on level ground) and allow it to idle for a few minutes.
11. Turn the engine off and wait approximately three minutes. Recheck the oil level on engine oil inspection window while holding the motorcycle vertically. The oil level should be at the "F" (full) mark. If it is lower than the "L" mark, add oil until it reaches the "F" mark. Inspect the area around the drain plug and oil filter cover for leaks.

CARBURETOR

The carburetor is factory set for the best performance. Do not attempt to alter its setting. There are two items of adjustment, however, under your care: idle speed and throttle cable play.

Idle Speed Adjustment

To adjust the idle speed properly, you need a tachometer. If you do not have one, ask your Suzuki dealer or a qualified mechanic to perform this adjustment.

1. Start up the engine and let the engine run until it warms up fully.

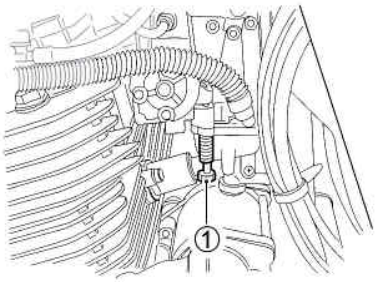

2. Turn the throttle stop screw ① in or out so that the engine idles at 1400 – 1600 r/min.

Throttle Cable Adjustment

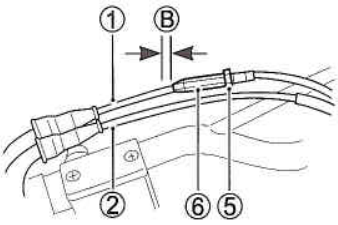

A twin throttle cable system is used in this motorcycle. Cable ① is for pulling and cable ② is for returning. To adjust the cable play, adjust the returning cable first and then adjust the pulling cable.

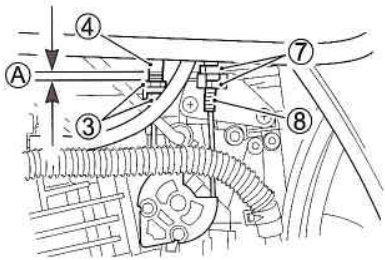

Returning cable play

The returning cable should be adjusted to have a thread length Ⓐ of 3.0 – 4.0 mm (0.12 – 0.16 in) as shown in the figure above. If the adjustment is necessary, adjust the thread length in the following way:

1. Loosen the lock nut ③.
2. Move the adjuster ④ to obtain the thread length Ⓐ of 3.0 – 4.0 mm (0.12 – 0.16 in).
3. Tighten the lock nut ③ securely.

Pulling cable play

The pulling cable should be adjusted to have a cable play Ⓑ of 0.5 – 1.0 mm (0.02 – 0.04 in) as shown in the figure. If the adjustment is necessary, adjust the cable play in the following way:

1. Turn the handlebar all the way to the left.
2. Loosen the lock nuts ⑤.
3. Turn the adjuster ⑥ to obtain the cable play Ⓑ of 0.5 – 1.0 mm (0.02 – 0.04 in). If necessary, loosen the lock nut ⑦. Turn the adjuster ⑧ to obtain the same cable play Ⓑ.
4. Tighten the lock nuts (⑤, ⑦) securely.

⚠WARNING

Inadequate throttle cable play can cause engine speed to rise suddenly when you turn the handlebars. This can lead to loss of rider control.

Adjust the throttle cable play so that engine idle speed does not rise due to handlebar movement.

FUEL HOSE

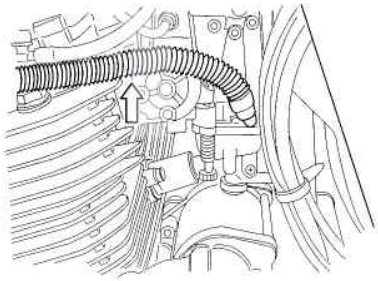

Inspect the fuel hose for damage and fuel leakage. If any defects are found, the fuel hose must be replaced.

CLUTCH ADJUSTMENT

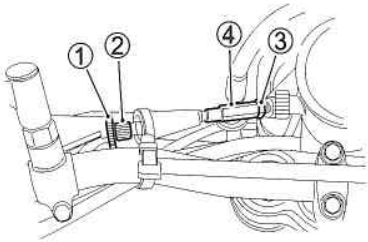

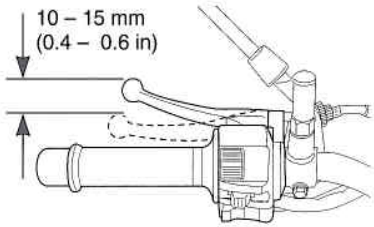

The play of the clutch lever should be 10 – 15 mm (0.4 – 0.6 in) as measured at the clutch lever end. If you find the play of the clutch incorrect, adjust it in the following way.

1. Loosen the lock nut ① and turn in the adjuster ② as far as it will go.
2. Loosen the lock nut ③ and relocate the adjuster ④ to obtain the correct play.
3. Minor adjustment can be made with the clutch lever side adjuster ②.
4. Tighten the lock nuts ① and ③.

DRIVE CHAIN

This motorcycle has a continuous drive chain constructed from special materials. It does not use a master link. The drive chain has special "O" rings that permanently seal grease inside. We recommend that you take your motorcycle to an authorized Suzuki dealer if the drive chain needs to be replaced.

⚠WARNING

Riding with the chain in poor condition or improperly adjusted can lead to an accident.

Inspect, adjust, and maintain the chain properly before each ride, according to this section.

The condition and adjustment of the drive chain should be checked before each use of the motorcycle. Always follow the guidelines below for inspecting and servicing the chain.

Inspecting the Drive Chain

When inspecting the chain, look for the following:

- Loose pins
- Damaged rollers
- Dry or rusted links
- Kinked or binding links
- Excessive wear
- Improper chain adjustment

If you find anything wrong with the drive chain condition or adjustment, correct the problem if you know how. If necessary, consult your authorized Suzuki dealer. Damage to the drive chain means that the sprockets may also be damaged. Inspect the sprockets for the following:

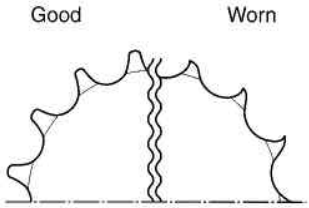

- Excessively worn teeth
- Broken or damaged teeth
- Loose sprocket mounting nuts

If you find any of these problems with your sprocket, consult your Suzuki dealer.

NOTE: The two sprockets should be inspected for wear when a new chain is installed and replace them if necessary.

NOTE: The chain is an endless type chain (no master link) for maximum strength. Chain replacement requires that the swingarm be removed. Trust this work only to a qualified technician. Do not install a master link type chain.

Drive Chain Cleaning and Oiling

Clean and oil the chain as follows:

1. Wash the chain with kerosene. Kerosene will lubricate and clean the chain.

⚠WARNING

Kerosene can be hazardous. Kerosene is flammable. Children or pets may be harmed from contact with kerosene.

Keep flames and smoking materials away from kerosene. Keep children and pets away from kerosene. If swallowed, do not induce vomiting. Call a physician immediately. Dispose of used kerosene properly.

CAUTION

Cleaning the chain with gasoline or commercial cleaning solvents can damage O-rings and ruin the chain.

Clean the drive chain with kerosene only.

2. Allow the chain to dry, then lubricate the links with Suzuki chain lube or an equivalent lubricant.

CAUTION

Some drive chain lubricants contain solvents and additives which could damage the O-rings in your chain.

Use Suzuki chain lube or an equivalent lubricant that is specifically intended for use with O-ring chains.

Drive Chain Adjustment

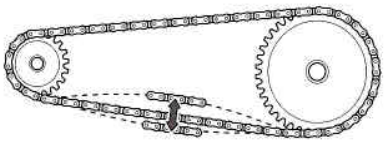

30 – 45 mm
(1.2 – 1.8 in)

Inspect the drive chain slack before each use of the motorcycle. The drive chain should be adjusted for 30 – 45 mm (1.2 – 1.8 in) of slack, as shown.

⚠WARNING

Too much chain slack can cause the chain to come off the sprockets, resulting in an accident or serious damage to the motorcycle.

Inspect and adjust the drive chain slack before each use.

To adjust the drive chain, follow the procedure below:

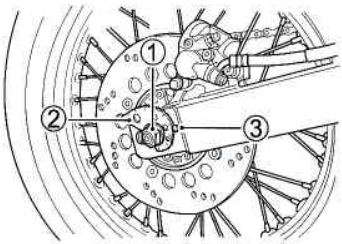

1. Loosen the axle nut ①.
2. Turn the right and left adjusters ② until the chain has 30 – 45 mm (1.2 – 1.8 in) of slack halfway between the engine sprocket and rear sprocket.
3. At the same time that the chain is being adjusted, the rear sprocket must be kept in perfect alignment with the front sprocket. To assist you in performing this procedure, there are reference marks ③ on the adjusters and each chain adjuster which are to be aligned with each other and to be used as a reference from one side to the other.
4. Tighten the axle nut ① securely. Replace the cotter pin with a new one.
5. Recheck the chain slack after tightening and readjust if necessary.

Rear axle nut tightening torque:
110 N·m (11.0 kgf-m, 79.5 lbf-ft)

BRAKES

This motorcycle has front and rear disk brakes.

⚠WARNING

Failure to inspect and properly maintain the brakes increases your chance of having an accident.

Inspect the brake system before each use according to the INSPECTION BEFORE RIDING section. Follow the MAINTENANCE SCHEDULE section to maintain your brake system.

NOTE: Operating in mud, water, sand or other extreme conditions can cause accelerated brake wear. If you operate your motorcycle under these conditions, the brakes must be inspected more often than recommended in the MAINTENANCE SCHEDULE.

Brake Fluid

FRONT

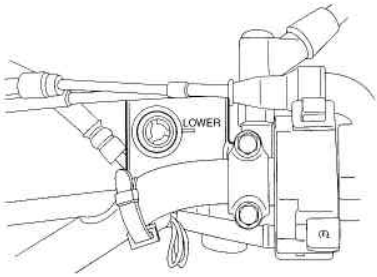

REAR

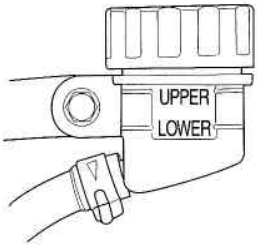

Check the brake fluid level in both the front and rear brake fluid reservoirs. If the level in either reservoir is below the lower mark, inspect for brake pad wear and leaks.

⚠WARNING

Brake fluid is harmful or fatal if swallowed, and harmful if it comes in contact with skin or eyes.

If swallowed, do not induce vomiting. Immediately contact a poison control center or a physician. If brake fluid gets in eyes, flush eyes with water and seek medical attention. Wash thoroughly after handling. Solution can be poisonous to animals. Keep out of the reach of children and animals.

⚠WARNING

Failure to keep the brake fluid reservoir full with proper brake fluid can be hazardous. The brakes may not work correctly without the proper amount and type of brake fluid. This could lead to an accident.

Inspect the brake fluid level before each use. Use only DOT4 brake fluid from a sealed container. Never use or mix different types of brake fluid. If there is frequent loss of fluid, take your motorcycle to a SUZUKI dealer or a qualified mechanic for inspection.

CAUTION

Spilled brake fluid can damage painted surfaces and plastic parts.

Avoid spilling any fluid when filling the reservoir. Wipe up spills immediately.

Brake Pads

FRONT

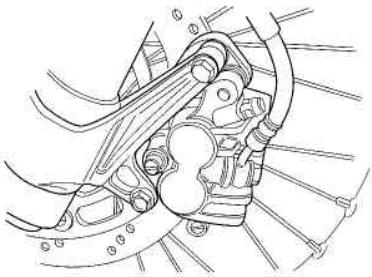

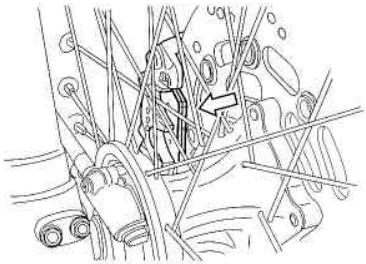

REAR

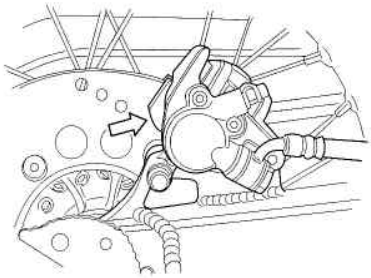

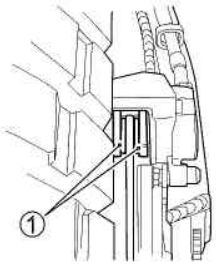

① Grooved wear limit line

Inspect the front and rear brake pads to see if they are worn down to the grooved wear limit line. If a front or rear pad is worn to the grooved limit line, both front or both rear pads must be replaced with new ones. After replacing either the front or rear brake pads, the brake lever or pedal must be pumped several times. This will extend the pads to their proper position.

⚠WARNING

Riding with worn brake pads will reduce braking performance and will increase your chance of having an accident.

Inspect brake pad wear before each use. Ask your SUZUKI dealer or a qualified mechanic to replace brake pads if any pad is worn to the limit.

⚠WARNING

Failure to extend brake pads after repair or replacement can cause poor braking performance and may result in an accident.

Before riding, "pump" the brake lever/pedal repeatedly until the brake pads are pressed against the brake disks and proper lever/pedal stroke and firm feel are restored.

NOTE: Do not squeeze/depress the brake lever/pedal when the pads are not in their positions. It is difficult to push the pistons back into position.

⚠ WARNING

Replacing only one or the two brake pads can result in uneven braking action.

Replace both pads together.

Rear Brake Adjustment

The rear brake pedal must be adjusted to set the clearance between the pedal and the footrest. Adjust the brake pedal as follows:

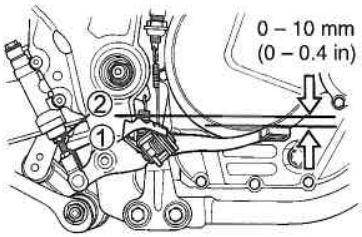

1. Loosen the lock nut ①, and turn the push rod ② to locate the pedal 0 – 10 mm (0 – 0.4 in) below the top face of the foot rest.
2. Retighten the lock nut ① to lock the push rod ② in the proper position.

CAUTION

An incorrectly adjusted brake pedal may force brake pads to rub against the disk at all times, causing damage to the pads and disk.

Follow the steps in this section to adjust the brake pedal properly.

Rear Brake Light Switch

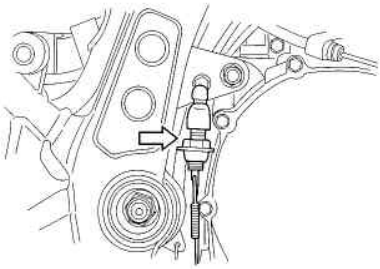

The rear brake light switch is located under the right frame cover. To adjust the brake light switch, hold the switch body and turn the adjuster so that the brake light will come on just before a pressure rise is felt when the brake pedal is depressed.

TIRES

⚠WARNING

Failure to follow these warnings may result in an accident due to tire failure. The tires on your motorcycle form the crucial link between your motorcycle and the road.

Follow these instructions:

- **Check tire condition and pressure, and adjust pressure before each ride.**
- **Avoid overloading your motorcycle.**
- **Replace a tire when worn to the specified limit, or if you find damage such as cuts or cracks.**
- **Always use the size and type of tires specified in this owner's manual.**
- **Balance the wheel after tire installation.**
- **Read this section of the owner's manual carefully.**

Tire Pressure and Loading

Proper tire pressure and proper tire loading are important factors. Overloading your tires can lead to tire failure and loss of motorcycle control.

Check tire pressure each time before you ride, and adjust tire pressure according to the table below. Tire pressure should only be checked and adjusted before riding since riding will heat up the tires and lead to higher inflation pressure readings.

Under-inflated tires make smooth cornering difficult and can result in rapid wear. Over-inflated tires cause a smaller amount of tire to be in contact with the road, which can contribute to skidding and loss of control.

Cold inflation tire pressure

	SOLO RIDING	DUAL RIDING
FRONT	150 kPa 1.50 kgf/cm² 22 psi	175 kPa 1.75 kgf/cm² 25 psi
REAR	175 kPa 1.75 kgf/cm² 25 psi	200 kPa 2.00 kgf/cm² 29 psi

Tire Condition and Type

Tire condition and tire type affect motorcycle performance. Cuts or cracks in the tires can lead to tire failure and loss of motorcycle control. Worn tires are susceptible to puncture failures and subsequent loss of motorcycle control. Tire wear also affects the tire profile, changing motorcycle handling characteristics.

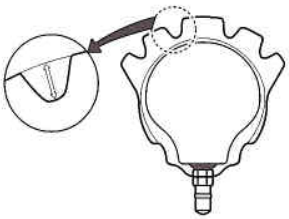

Check the condition of your tires each time before you ride. Replace tires if tires show visual evidence of damage such as cracks or cuts, or if tread depth is less than 4.0 mm (0.16 in).

NOTE: These wear limits will be reached before the wear bars molded into the tire make contact with the road.

When you replace a tire, be sure to replace it with a tire of the size listed below. If you use a different size of tire, motorcycle handling may be adversely affected, possibly resulting in loss of motorcycle control.

	Front	Rear
Size	90/90-21 M/C 54S	120/90-17 M/C 64S
Type	BRIDGESTONE TRAIL WING 41	BRIDGESTONE TRAIL WING 42

Be sure to balance the wheel after repairing a puncture or replacing the tire. Proper wheel balance is important to avoid variable wheel-to-road contact and to avoid uneven tire wear.

⚠WARNING

An improperly repaired, installed, or balanced tire can cause loss of control or shorten tire life.

- **Ask your SUZUKI dealer or a qualified mechanic to perform tire repair, replacement, and balancing because proper tools and experience are required.**
- **Install tires according to the rotation direction shown by arrows on the sidewall of each tire.**

SPOKE NIPPLE TIGHTNESS

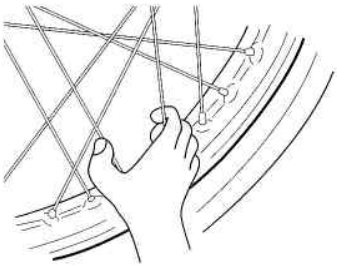

Check the tension to verify the tightness of the spoke nipples. The tension of the spokes can be checked by squeezing the spokes with your fingers. If a spoke nipple is loose, the spoke will bend more than the others. The tension can also be checked by hitting the spokes with a small metal bar. If the spoke nipple is loose, its sound will be dull.

To tighten the spoke nipples properly, tighten them equally to the specified torque. Loose and overtightened spoke nipples may cause unequal spoke tension and may result in wheel rim distortion. Contact your Suzuki dealer for this service.

SPARK ARRESTER

The muffler has a spark arrester which must be periodically cleaned to maintain good efficiency. Clean the spark arrester as follows:

⚠WARNING

A hot muffler can burn you. The muffler will be hot enough to burn you for some time after stopping the engine.

Wait until the muffler cools to avoid burns.

1. Shift into neutral.

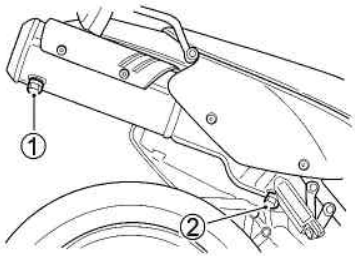

2. Remove the drain bolts, ① and ②.
3. Start the engine and rev it to 4000 rpm for a minute to blow out the accumulated carbon particles.

⚠WARNING

Running the engine indoors or in a garage can be hazardous. Exhaust gas contains carbon monoxide, a gas that is colorless and odorless and can cause death or severe injury.

Only run the engine outdoors where there is fresh air.

⚠WARNING

Blowing out the accumulated hot carbon particles where there is flammable material can cause a fire.

Clean the spark arrester in an open area away from flammable materials.

4. Stop the engine. Wait until the muffler cools, then replace the drain bolts and tighten them securely.

⚠WARNING

Running the engine with loose drain bolts or without drain bolts will allow hot carbon particles to escape. This can cause a fire.

Tighten the drain bolts securely.

SIDE STAND/IGNITION INTERLOCK SYSTEM

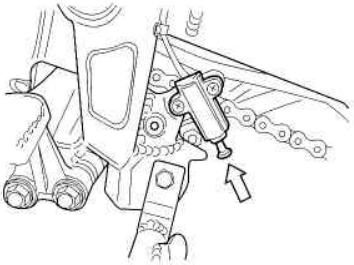

Check the side stand/ignition interlock system for proper operation as follows:

1. Sit on the motorcycle in the normal riding position, with the side stand up.
2. Shift into first gear, hold the clutch in, and start the engine.
3. While continuing to hold the clutch in, move the side stand to the down position.

If the engine stops running when the side stand is moved to the down position, then the side stand/ignition interlock system is working properly. If the engine continues to run with the side stand down and the transmission in gear, then the side stand/ignition interlock system is not working properly. Have your motorcycle inspected by an authorized Suzuki dealer or some other qualified service mechanic.

⚠WARNING

If the side stand/ignition interlock system is not working properly, it is possible to ride the motorcycle with the side stand in the down position. This may interfere with rider control during a left turn.

Check the side stand/ignition interlock system for proper operation before riding. Check that the side stand is returned to its full up position before starting off.

FRONT WHEEL REMOVAL

1. Place the motorcycle on the side stand.

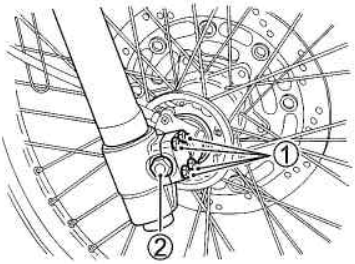

2. Loosen the axle holder nuts ①.
3. Loosen the axle shaft ②.
4. Place an accessory service stand or equivalent under the swingarm to help stabilize the rear end. Carefully position a jack under the engine and raise until the front wheel is slightly off the ground.

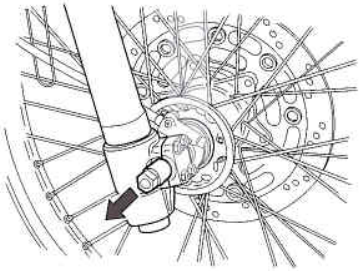

5. Draw out the axle shaft.
6. Slide the front wheel forward.

NOTE: Never squeeze the front brake lever with the wheel removed. It is very difficult to force the pads back into the caliper assembly.

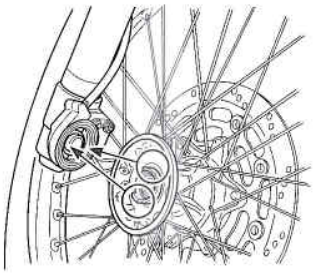

7. To reinstall the wheel assembly, reverse the sequence described above. Fit the slots of speedometer gear box to the projections of the wheel hub.
8. After installing the wheel, apply the brake several times to restore the proper lever stroke.

⚠WARNING

Failure to extend brake pads after installing the wheel can cause poor braking performance and may result in an accident.

Before riding, "pump" the brake repeatedly until brake pads are pressed against the brake disks and proper lever stroke and firm feel are restored. Also check that the wheel rotates freely.

⚠WARNING

Failure to torque bolts and nuts properly could lead to an accident.

Torque bolts and nuts to the proper specifications. If you are not sure of the proper procedure, have your authorized SUZUKI dealer or a qualified mechanic do this.

Front axle shaft tightening torque:
65 N·m (6.5 kgf-m, 47.0 lbf-ft)

Axle holder bolt tightening torque:
10 N·m (1.0 kgf-m, 7.0 lbf-ft)

NOTE: Be careful not to damage the oil seal when installing the front wheel.

REAR WHEEL REMOVAL

⚠WARNING

A hot muffler can burn you. The muffler will be hot enough to burn you for some time after stopping the engine.

Wait until the muffler cools to avoid burns.

1. Place the motorcycle on the side stand.

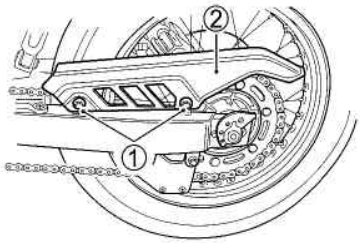

2. Remove the two bolts ① and the chain guard ②.

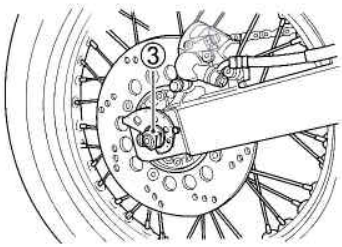

3. Remove the axle nut ③.

4. Place an accessory service stand or equivalent under the swingarm to lift the rear wheel slightly off the ground.

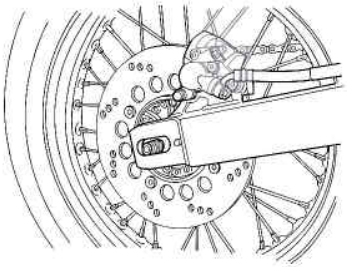

5. Draw out the axle.

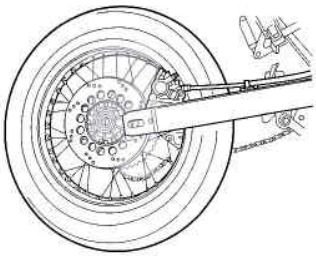

6. With the wheel moved forward, remove the chain from the sprocket.
7. Pull the rear wheel assembly rearward.

NOTE: Never depress the rear brake pedal with the rear wheel removed. It is very difficult to force the pads back into the caliper assembly.

8. To replace the wheel, reverse the complete sequence listed. Replace the cotter pin with a new one.
9. After installing the wheel, apply the brake several times and then check that the wheel rotates freely.

⚠WARNING

Failure to adjust the drive chain and failure to torque bolts and nuts properly could lead to an accident.

- **Adjust the drive chain as described in DRIVE CHAIN ADJUSTMENT section after installing the rear wheel.**
- **Torque bolts and nuts to the proper specifications. If you are not sure of the proper procedure, have your authorized SUZUKI dealer or a qualified mechanic do this.**

Rear axle nut tightening torque:
110 N·m (11.0 kgf-m, 79.5 lbf-ft)

⚠ WARNING

Failure to extend brake pads after installing the wheel can cause poor braking performance and may result in an accident.

Before riding, "pump" the brake pedal repeatedly until the brake pads are pressed against the brake disks and proper pedal stroke and firm feel are restored. Also check that the wheel rotates freely.

LIGHT BULB REPLACEMENT

The wattage rating of each bulb is shown in the following chart. When replacing a burned out bulb, always use the same wattage rating.

CAUTION

Using a light bulb with the wrong wattage rating can cause electrical system damage or shorten bulb life.

Always use the specified light bulb.

Headlight	12V 60/55W
Turn signal light	12V 21W
Brake light/Taillight	12V 21/5W
License plate light	12V 5W

Headlight

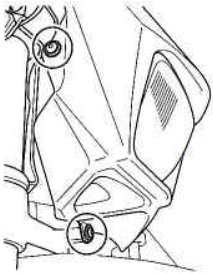

1. Remove the screws (right and left), and take off the headlight cover.

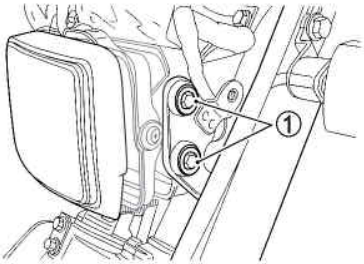

2. Remove the four bolts ①.

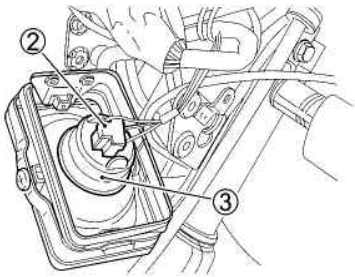

3. Disconnect the socket ② from the headlight.
4. Remove rubber cap ③.

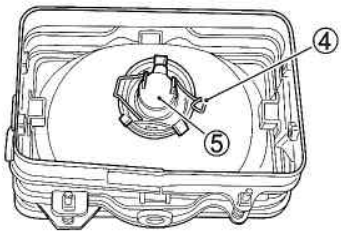

5. Unhook the spring ④.
6. Remove the bulb ⑤.
7. To install the headlight, reverse the procedure described above.

CAUTION

Oil from your skin may damage the headlight bulb or shorten its life.

Grasp the new bulb with a clean cloth.

Headlight Beam Adjustment
The headlight beam can be adjusted both horizontally and vertically if necessary.

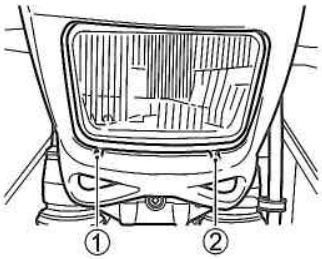

To adjust the beam vertically:
Turn the adjuster ① clockwise or counterclockwise.

To adjust the beam horizontally:
Turn the adjuster ② clockwise or counterclockwise.

Turn Signal Light

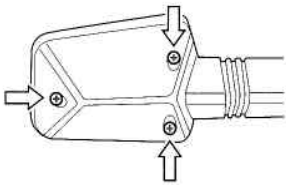

1. Remove the screws and the lens.

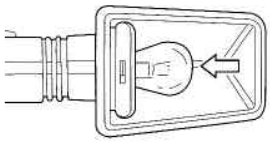

2. Push in on the bulb, turn it counterclockwise, and pull it out.
3. To fit the replacement bulb, push it in and turn it to the right while pushing.

CAUTION

Overtightening the screws when reinstalling the lens may cause the lens to crack.

Tighten the lens screws only until they are snug.

Brake Light/Taillight

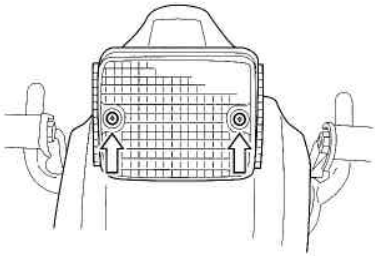

1. Loosen the screws and remove the lens.

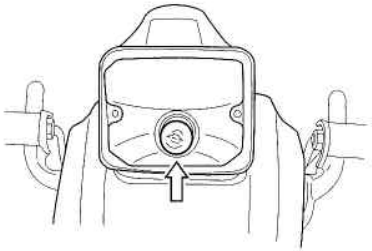

2. Push in on the bulb, turn it counterclockwise, and pull it out.
3. To fit the replacement bulb, push it in and turn it to the right while pushing.

CAUTION

Overtightening the screws when reinstalling the lens may cause the lens to crack.

Tighten the screws only until they are snug.

License Plate Light

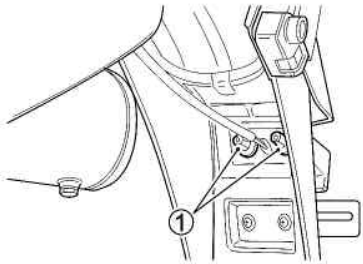

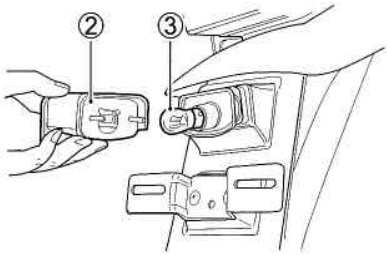

1. Remove the two nuts ① and the license plate lens assembly ②.
2. Push in on the bulb ③, turn it counterclockwise, and pull it out.
3. To fit the replacement bulb, push it in and turn it to the right while pushing.

FUSE

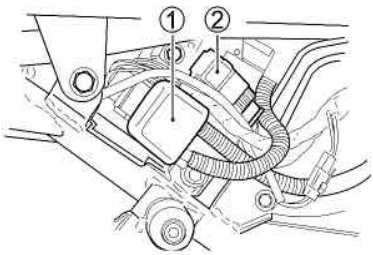

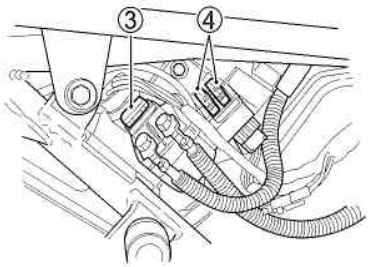

The fuses are located behind the right frame cover. The 30A main fuse and two 10A headlight fuses are equipped. If there is any electrical system failure, the fuse must be checked. It indicates a short-circuit or an overload in the electrical system. To check the fuse ③ or ④, remove the frame cover and remove the starter relay cover ① or the fuse box lid ②. 30A and a 10A spare fuse are provided.

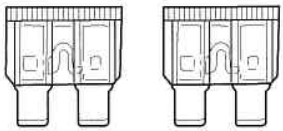

CAUTION

Installing a fuse of incorrect rating or using aluminum foil or wire instead of a fuse may seriously damage the electrical system.

Always replace a blown fuse with a fuse of the same type and rating. If the new fuse blows in a short time, consult your Suzuki dealer or a qualified mechanic immediately.

Fuse List

- 30A MAIN fuse protects all electrical circuits.
- 10A HEAD-HI fuse protects the headlight high beam and high beam indicator light.
- 10A HEAD-LO fuse protects the headlight low beam.

TROUBLESHOOTING

FUEL SYSTEM CHECK 8-2
IGNITION SYSTEM CHECK 8-3

TROUBLESHOOTING

This troubleshooting guide is provided to help you find the cause of some common complaints.

CAUTION

Failure to troubleshoot a problem correctly can damage your motorcycle. Improper repairs or adjustments may damage the motorcycle instead of fixing it. Such damage may not be covered under warranty.

If you are not sure about the proper action, consult your Suzuki dealer about the problem.

COMPLAINT: Engine is hard to start or does not start at all.

Something is probably wrong with the fuel system or ignition system.

FUEL SYSTEM CHECK

1. Make sure there is enough fuel in the fuel tank.
2. Check that the fuel valve is in the "ON" position.
3. Make sure there is enough fuel reaching the carburetor from the fuel valve.
   a. Place a container under the carburetor. Loosen the drain screw located under the carburetor. Drain the fuel from the carburetor into a container.

⚠WARNING

Fuel and fuel vapor are highly flammable and toxic. You can be burned or poisoned when handling fuel.

When draining the carburetor:
- **Stop the engine and keep flames, sparks, and heat sources away.**
- **Drain fuel only outdoors or in a well-ventilated area.**
- **Do not smoke.**
- **Wipe up spills immediately.**
- **Avoid breathing fuel vapor.**
- **Keep children and pets away.**
- **Dispose of drained fuel properly.**

   b. Place the empty container under the carburetor. Turn the fuel valve lever to the "PRI" position and see if the fuel flows from the drain hole.
   c. Turn the fuel valve lever to the "ON" position.
   d. Drain the fuel and tighten the drain screw.
   e. Push the electric starter button for several seconds to crank the engine referring to the STARTING THE ENGINE section.
   f. Loosen the drain screw and check that the carburetor is filled back up with fuel.
   g. Tighten the drain screw.

4. If fuel is reaching the carburetor, ignition system should be checked next.

IGNITION SYSTEM CHECK

1. Remove the two spark plugs and reattach them to the spark plug leads.
2. Prepare the motorcycle to start the engine by referring to the STARTING THE ENGINE section. While placing a spark plug with its base firmly on the engine, push the electric starter button. If the ignition system is operating properly, a blue spark should jump across the spark plug gap. If there is no spark, take your machine to your authorized Suzuki dealer.

⚠WARNING

Performing the spark test improperly can cause a high voltage electrical shock or an explosion.

Avoid performing this check if you are not familiar with this procedure, or if you have a heart condition or wear a pacemaker. Keep the spark plug away from the spark plug hole during this test.

COMPLAINT: Engine Stalls

1. Make sure there is enough fuel in the fuel tank.
2. Check to see that the spark plugs are not fouled. Remove the plugs and clean them. Replace them, if necessary.
3. Make sure the fuel valve is not clogged.
4. Check the idle speed. If necessary, adjust it using a tachometer. The correct idle speed is 1400 – 1600 r/min.

STORAGE PROCEDURE AND MOTORCYCLE CLEANING

STORAGE PROCEDURE 9-2
PROCEDURE FOR RETURNING TO SERVICE 9-3
CORROSION PREVENTION 9-3
MOTORCYCLE CLEANING 9-5
INSPECTION AFTER CLEANING 9-6

STORAGE PROCEDURE AND MOTORCYCLE CLEANING

STORAGE PROCEDURE

If your motorcycle is to be left unused for an extended period of time, it needs special servicing requiring appropriate materials, equipment and skill. For this reason, Suzuki recommends that you trust this maintenance work to your Suzuki dealer. If you wish to service the machine for storage yourself, follow the general guidelines below:

MOTORCYCLE

Clean the entire motorcycle. Place the motorcycle on the side stand on a firm, flat surface where it will not fall over. Turn the handlebars all the way to the left and lock the steering, and remove the ignition key.

FUEL

1. Fill the fuel tank to the top with fuel mixed with the amount of gasoline stabilizer recommended by the stabilizer manufacturer.
2. Drain the carburetor or run the engine for a few minutes until the stabilized gasoline fills the carburetor.

⚠WARNING

Fuel and fuel vapor are highly flammable and toxic. You can be burned or poisoned when handling fuel.

When draining the carburetor:

- **Stop the engine and keep flames, sparks, and heat sources away.**
- **Drain fuel only outdoors or in a well-ventilated area.**
- **Do not smoke.**
- **Wipe up spills immediately.**
- **Avoid breathing fuel vapor.**
- **Keep children and pets away.**
- **Dispose of drained fuel properly.**

ENGINE

1. Pour one tablespoon of motor oil into the spark plug hole. Reinstall the spark plug and crank the engine a few times.
2. Drain the engine oil thoroughly and refill the crankcase with fresh engine oil all the way up to the filler hole.
3. Cover the air cleaner intake and the muffler outlet with oily rags to prevent humidity from entering.

BATTERY

1. Remove the battery from the motorcycle.
2. Clean the outside of the battery with mild soap and remove corrosion from the terminals and wiring harness.
3. Store the battery in a room above freezing.

TIRES

Inflate tires to the normal pressure.

EXTERNAL

- Spray all vinyl and rubber parts with rubber protectant.
- Spray unpainted surfaces with rust preventative.
- Coat painted surfaces with car wax.

MAINTENANCE DURING STORAGE

Once a month, recharge the battery. The standard charging rate is 0.9A × 5 to 10 hours and the maximum rate is 4.0A × 1 hour. Never exceed the maximum charging rate.

PROCEDURE FOR RETURNING TO SERVICE

1. Clean the entire motorcycle.
2. Remove the oily rags from the air cleaner intake and muffler outlet.
3. Drain all the engine oil. Install a new oil filter and fill the engine with fresh oil as outlined in this manual.
4. Reinstall the battery.
5. Remove the spark plugs. Turn the engine a few times. Reinstall the spark plugs
6. Make sure that the motorcycle is properly lubricated.
7. Perform the INSPECTION BEFORE RIDING as listed in this manual.
8. Start the motorcycle as outlined in this manual.

CORROSION PREVENTION

It is important to take good care of your motorcycle to protect it from corrosion and keep it looking new for years to come.

Important Information About Corrosion

Common causes of corrosion

1. Accumulation of road salt, dirt, moisture, or chemicals in hard-to-reach areas.
2. Chipping, scratches, and any damage to treated or painted metal surfaces resulting from minor accidents or impacts from stones and gravel.

Road salt, sea air, industrial pollution, and high humidity will all contribute to corrosion.

How to Help Prevent Corrosion
Wash your motorcycle frequently, at least once a month. Keep your motorcycle as clean and dry as possible.

Remove foreign material deposits. Foreign material such as road salt, chemicals, road oil or tar, tree sap, bird droppings and industrial fallout may damage your motorcycle's finish. Remove these types of deposits as quickly as possible. If these deposits are difficult to wash off, an additional cleaner may be required. Follow the manufacturer's directions when using these special cleaners.

Repair finish damage as soon as possible. Carefully examine your motorcycle for damage to the painted surfaces. Should you find any chips or scratches in the paint, touch them up immediately to prevent corrosion from starting. If the chips or scratches have gone through to the bare metal, have a Suzuki dealer make the repair.

Store your motorcycle in a dry, well-ventilated area. If you often wash your motorcycle in the garage or if you frequently park it inside when wet, your garage may be damp. The high humidity may cause or accelerate corrosion. A wet motorcycle may corrode even in a heated garage if the ventilation is poor.

Cover your motorcycle. Exposure to mid-day sun can cause the colors in paint, plastic parts, and instrument faces to fade. Covering your motorcycle with a high-quality, "breathable" motorcycle cover can help protect the finish from the harmful UV rays in sunlight, and can reduce the amount of dust and air pollution reaching the surface. Your Suzuki dealer can help you select the right cover for your motorcycle.

MOTORCYCLE CLEANING

Washing the Motorcycle

When washing the motorcycle, follow the instructions below:

1. Remove dirt and mud from the motorcycle with running water. You may use a soft sponge or brush. Do not use hard materials which can scratch the paint.
2. Wash the entire motorcycle with mild detergent or car wash soap using a sponge or soft cloth. The sponge or cloth should be frequently soaked in the soap solution.

CAUTION

Radiator and oil cooler fins can be damaged by spraying high pressure water on them.

Do not spray high pressure water on the radiator and oil cooler fins.

NOTE: Avoid spraying or allowing water to flow over the following places:

- *Ignition switch*
- *Spark plugs*
- *Fuel tank cap*
- *Carburetor*
- *Brake master cylinders*

3. Once the dirt has been completely removed, rinse off the detergent with running water.
4. After rinsing, wipe off the motorcycle with a wet chamois or cloth and allow it to dry in the shade.
5. Check carefully for damage to painted surfaces. If there is any damage, obtain "touch-up" paint and "touch-up" the damage.

CAUTION

Cleaning with any alkaline or strong acid cleaner gasoline, brake fluid, or any other solvent will damage the motorcycle parts.

Clean only with soft cloth and warm water with mild detergent.

Waxing the Motorcycle

After washing the motorcycle, waxing is recommended to further protect and beautify the paint. Observe the precautions specified by the wax manufacturer.

INSPECTION AFTER CLEANING

For extended life of your motorcycle, lubricate according to "GENERAL LUBRICATION" section.

⚠ WARNING

Wet brakes can cause poor braking performance and may lead to an accident.

Avoid a possible accident by expecting longer stopping distances after washing your motorcycle. Apply brakes several times to let heat dry the brake pads or shoes.

Follow the procedures in the "INSPECTION BEFORE RIDING" section to check your motorcycle for any problems that may have arisen during your last ride.

CUSTOMER INFORMATION

EMISSION CONTROL WARRANTY 10-2
TAMPERING WITH NOISE CONTROL SYSTEM PROHIBITED 10-2
SERIAL NUMBER LOCATION 10-3
REPORTING SAFETY DEFECTS 10-4
LOCATION OF LABELS 10-5

CUSTOMER INFORMATION

EMISSION CONTROL WARRANTY

Suzuki Motor Corporation warrants to the ultimate purchaser and each subsequent purchaser that this vehicle is designed, built, and equipped so as to conform at the time of sale with all U.S. emission standards applicable at the time of manufacture, and that it is free from defects in materials and workmanship which would cause it not to meet these standards within its useful life. Useful life is defined for each class of motorcycle as 5 years or the corresponding number of kilometers (miles) shown in the chart below, whichever occurs first.

Vehicle class	Engine displacement	Useful Life Distance
Class I	50 to 169 cc	12000 km (7456 miles)
Class II	170 to 279 cc	18000 km (11185 miles)
Class III	280 cc and over	30000 km (18641 miles)

Failures, other than those resulting from defects in material or workmanship, which arise solely as a result of owner abuse and/or lack of proper maintenance are not covered by the warranty.

TAMPERING WITH NOISE CONTROL SYSTEM PROHIBITED

Federal law prohibits the following acts or the causing thereof;

1. the removal or rendering inoperative by any person other than for purposes of maintenance, repair, or replacement, of any device or element of design incorporated into any new vehicle for the purpose of noise control prior to its sale or delivery to the ultimate purchaser or while it is in use, or
2. the use of the vehicle after such device or element of design has been removed or rendered inoperative by any person.

Among those acts presumed to constitute tampering are the acts listed below:

- Removing or puncturing the muffler, baffles, header pipes, screen type spark arrester (if equipped) or any other component which conducts exhaust gases
- Replacing the exhaust system or muffler with a system or muffler not marked with the same model specific code as the code listed on the Motorcycle Noise Emission Control Information label, and certified to appropriate EPA noise standards

- Removing or puncturing the air cleaner case, air cleaner cover, baffles, or any other component which conducts intake air.

Whenever replacing parts on your motorcycle, Suzuki recommends that you use genuine Suzuki replacement parts or their equivalent.

SERIAL NUMBER LOCATION

You need to know the frame and engine serial numbers to get title documents for your motorcycle. You also need these numbers to help your dealer when you order parts.

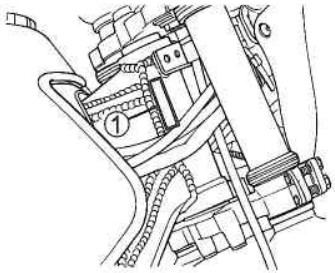

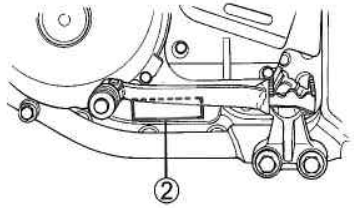

The frame number ① is stamped on the steering head tube as shown in the illustration. The engine serial number ② is stamped on the crankcase assembly.

Write down the serial numbers here for your future reference.

Frame No.:

Engine No.

REPORTING SAFETY DEFECTS

If you believe that your vehicle has a defect which could cause a crash or could cause injury or death, you should immediately inform the National Highway Traffic Safety Administration (NHTSA) in addition to notifying American Suzuki Motor Corp.

If NHTSA receives similar complaints, it may open an investigation, and if it finds that a safety defect exists in a group of vehicles, it may order a recall and remedy campaign. However, NHTSA cannot become involved in individual problems between you, your dealer, or American Suzuki Motor Corp.

To contact NHTSA, you may either call the Vehicle Safety Hot Line toll-free 1-888-327-4236 (TTY: 1-800-424-9153); go to http://www.safercar.gov; or write to: Administrator, NHTSA, 400 Seventh Street, SW., Washington DC 20590. You can also obtain other information about motor vehicle safety from http://www.NHTSA.gov.

To contact American Suzuki, owners in the continental United States can call toll-free 1-800-444-5077, or write to: American Suzuki Motor Corporation Motorcycle Customer Service P.O. Box 1100, Brea, CA 92822-1100.

For owners outside the continental United States, please refer to the distributor's address listed on your Warranty Information brochure.

LOCATION OF LABELS

Read and follow all of the warnings labeled on your motorcycle. Make sure you understand all of the labels. Keep the labels on your motorcycle. Do not remove them for any reason.

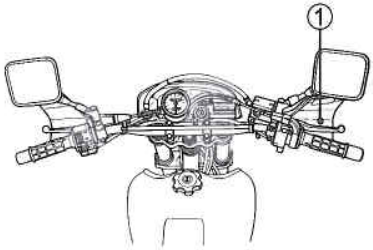

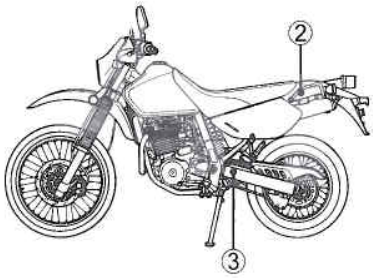

①

⚠ WARNING

Failure to follow these safety precautions may increase your risk of injury:

- Wear a helmet, eye protection, and bright protective clothing.
- Don't ride after consuming alcohol or other drugs.
- Slow down on slippery surfaces, unfamiliar terrain, or when visibility is reduced.
- Read owner's manual carefully.

②

The owner's manual contains important safety information and instructions which should be read carefully before operating the vehicle. If the vehicle has been resold, obtain the owner's manual from the previous owner or contact your local SUZUKI dealer for assistance.

③

⚠ WARNING

- Check tire condition, wear, and cold tire pressure before each ride.
- Replace only with tires of listed size and type.
- Read Owner's manual for more information.

COLD TIRE PRESSURE	SOLO RIDING			DUAL RIDING		
	kPa	kgf/cm²	psi	kPa	kgf/cm²	psi
FRONT	150	1.50	22	175	1.75	25
REAR	175	1.75	25	200	2.00	29

		FRONT	REAR
TIRE SIZE		90/90-21 M/C 54S	120/90-17 M/C 64S
TYPE	BRIDGESTONE	TRAIL WING-41	TRAIL WING-42

SPECIFICATIONS

DIMENSIONS AND CURB MASS

Overall length	2255 mm (88.8 in)
	2235 mm (88.0 in) ... Low seat conversion
Overall width	865 mm (34.1 in)
Overall height	1195 mm (47.0 in)
	1155 mm (45.5 in) ... Low seat conversion
Wheelbase	1490 mm (58.7 in)
	1475 mm (58.1 in) ... Low seat conversion
Ground clearance	265 mm (10.4 in)
	225 mm (8.9 in) ... Low seat conversion
Seat height	885 mm (34.8 in)
	845 mm (33.0 in) ... Low seat conversion
Curb mass	166 kg (365 lbs)

ENGINE

Type	Four-stroke, air-cooled, OHC
Number of cylinders	1
Bore	100 mm (3.937 in)
Stroke	82.0 mm (3.228 in)
Displacement	644 cm^2 (39.3 cu. in)
Compression ratio	9.5 : 1
Carburetor	MIKUNI BST40, single
Air cleaner	Polyurethane foam element
Starter system	Electric
Lubrication system	Wet sump

DRIVE TRAIN

Clutch	Wet multi-plate type
Transmission	5-speed constant mesh
Gearshift pattern	1-down, 4-up
Primary reduction ratio	2.178 (61/28)
Gear ratios, Low	2.416 (29/12)
2nd	1.625 (26/16)
3rd	1.238 (26/21)
4th	1.000 (21/21)
Top	0.826 (19/23)
Final reduction ratio	2.800 (42/15)
Drive chain	D.I.D.525V9, 110 links

CHASSIS

Front suspension	Telescopic, coil spring, oil damped
Rear suspension	Link type, coil spring, oil damped
Front fork stroke	260 mm (10.2 in)
	220 mm (8.7 in) ... Low seat conversion
Rear wheel travel	260 mm (10.2 in)
	220 mm (8.7 in) ... Low seat conversion
Caster	28° 30'
Trail	111 mm (4.37 in)
Steering angle	43° (right & left)
Turning radius	2.5 m (8.2 ft)
Front brake	Disk brake
Rear brake	Disk brake
Front tire size	90/90-21 M/C 54S, tube type
Rear tire size	120/90-17 M/C 64S, tube type

ELECTRICAL

Ignition type	Electronic ignition (CDI)
Spark plug	NGK CR10E or DENSO U31ESR-N
Battery	12V 28.8 kC(8 Ah)/10 HR
Generator	Three-phase A.C. generator
Fuse	30/10/10A
Headlight	12V 60/55W
Turn signal light	12V 21W
Brake light/Taillight	12V 21/5W
Speedometer light	12V 1.7W
Neutral indicator light	12V 2W
High beam indicator light	12V 2W
Turn signal indicator light	12V 2W
License plate light	12V 5W

CAPACITIES

Fuel tank, including reserve	13 L (3.4 US gal)
	12 L (3.2 US gal) ... California model
Reserve	3.0 L (0.8 US gal)
Engine oil, oil change	2300 ml (2.4 US qt)
With filter change	2400 ml (2.5 US qt)

INDEX

A

ACCESSORIES AND LOADING 1-5
ADDITIONAL CONSIDERATIONS WHEN RIDING OFF-HIGHWAY 1-7
AIR CLEANER 7-8
AIR CLEANER DRAIN CAP 7-11

B

BATTERY 7-7
BE EXTRA SAFETY-CONSCIOUS ON BAD WEATHER DAYS 1-4
BE STREET SMART 1-6
BRAKES 7-23
BREAK-IN 4-2

C

CARBURETOR 7-17
CARRYING A PASSENGER 5-7
CARRYING A PASSENGER, ON-ROAD 1-5
CLUTCH ADJUSTMENT 7-19
CONCLUSION 1-6
CORROSION PREVENTION 9-3

D

DRIVE CHAIN 7-20

E

EMISSION CONTROL WARRANTY 10-2
ENGINE OIL 2-3,7-14

F

FRAME COVER AND SEAT REMOVAL 7-6
FRONT WHEEL REMOVAL 7-32
FUEL 2-2
FUEL HOSE 7-19
FUEL SYSTEM CHECK 8-2
FUEL TANK CAP 3-11
FUEL VALVE 3-12
FUSE 7-39

G

GEARSHIFT LEVER 3-14
GENERAL LUBRICATION 7-5

H

HELMET HOLDER 3-15

I

IF A COLLISION IS IMMINENT, DO SOMETHING 1-3
IF YOU DON'T HAVE A HELMET, BUY A HELMET AND WEAR IT EVERY TIME YOU RIDE 1-2
IGNITION SWITCH 3-5
IGNITION SYSTEM CHECK 8-3
INSPECTION AFTER CLEANING 9-6
INSPECTION BEFORE RIDING 1-5,4-3
INSTRUMENT PANEL 3-7

K

KEY 3-5
KNOW YOUR LIMITS 1-4

L

LEFT HANDLEBAR 3-8
LIGHT BULB REPLACEMENT 7-35
LOCATION OF LABELS 10-5
LOCATION OF PARTS 3-2

M

MAINTENANCE SCHEDULE 7-2
MODIFICATION 6-4
MOST ACCIDENTS CAN BE AVOIDED 1-2
MOTORCYCLE CLEANING 9-5
MOTORCYCLE SAFETY FOUNDATION'S "RIDING TIPS AND PRACTICE GUIDE" HANDBOOK (FOR OWNERS IN USA) 1-6

N

NOTICE 7-2

P

PRACTICE AWAY FROM TRAFFIC 1-4
PROCEDURE FOR RETURNING TO SERVICE 9-3

R

REAR BRAKE PEDAL 3-14
REAR WHEEL REMOVAL 7-33
REPORTING SAFETY DEFECTS 10-4
RIDING ON HILLS 5-5
RIGHT HANDLEBAR 3-10

S

SEAT HEIGHT CHANGE 3-17
SERIAL NUMBER LOCATION 10-3
SIDE STAND 3-15
SIDE STAND/IGNITION INTERLOCK SYSTEM 7-31
SPARK ARRESTER 7-30
SPARK PLUGS 7-12
SPECIAL SITUATIONS REQUIRE SPECIAL CARE 1-3
SPOKE NIPPLE TIGHTNESS 7-29
STARTING OFF AND SHIFTING 5-3
STARTING THE ENGINE 5-2
STOPPING AND PARKING 5-6
STORAGE PROCEDURE 9-2
SUSPENSION ADJUSTMENT 3-16

T

TAMPERING WITH NOISE CONTROL SYSTEM PROHIBITED 10-2
TIRES 7-27
TOOLS 7-5

U

USING THE TRANSMISSION 5-4

⚠WARNING

Failure to follow these safety precautions may increase your risk of injury:

- Wear a helmet, eye protection, and bright protective clothing.
- Don't ride after consuming alcohol or other drugs.
- Slow down on slippery surfaces, unfamiliar terrain, or when visibility is reduced.
- Read owner's manual carefully.

99011-32E63-03A

K9 **SUZUKI MOTOR CORPORATION**
300 TAKATSUKA, MINAMI, HAMAMATSU, JAPAN Printed in Japan

SUZUKI

PARTS CATALOGUE

DR650SEM1

(JS1SP46A)

E24

SUZUKI

Way of Life!

2020-5

1ST EDITION

PREFACE

When it becomes necessary to replace parts on SUZUKI MOTORCYCLES, always use SUZUKI GENUINE PARTS which have passed a strict inspection which guarantees quality and performance.

This parts catalogue covers the list of all service parts for SUZUKI DR650SEM1.

INSTRUCTIONS FOR QUOTING THE CATALOGUE

1. DIMENSIONS

Dimensions of the parts in this catalogue are indicated in unit millimeters.

2. ABBREVIATIONS

Abbreviations used in this catalogue are as follows:

AR	: As required	NT	: Number of teeth
ASSY	: Assembly	OPT	: Optional
E.NO.	: Engine number	OS	: Over size
F.NO.	: Frame number	STD	: Standard
D	: Diameter of material	T	: Thickness
ID	: Inside diameter	US	: Under size
OD	: Outside diameter	W	: Width
L	: Length		
LH	: Right hand side		
RH	: Right hand side		

～100045 : Up to F.NO.100045

100046～ : From F.NO.100046

12 x 34 x 5.6····· Figures in the description column show the dimensions of parts.

ID OD T(or W,L)

→12345-56781 (Parts No.) : indicates that the parts number was changed to 12345-56781 and the new parts are interchangeable with the former ones but the former ones are not interchangeable with new ones.

←12345-56781 (Parts No.) : indicates that the former and new parts are interchangeable with each other and both are usable.

3. INNER PARTS OF ASSEMBLY

Part name with a dot (.) in front as shown in the description column indicates the component of the assembly also available individually.

4. MODIFICATION NOTICE

A parts bulletin will be sent to you on all occasions when changes in parts occur, including interchangeable modifications between new parts and old ones.

5. NOTE

5-1. There are some different parts from those of production models among spare parts for the administrative reasons and common use of them with other models.

5-2. In respect of rubber hoses and vinyl tubes, please be sure to use them by cutting off according to the length mentioned on parts catalogue or what is actually required on the vehicle.

5-3. Note that the drawings on the illustration page are for ready reference of spare parts number, not to be used as an assembly manual. When assembling, use "SUZUKI SERVICE MANUAL".

6. SPECIFICATION CODE

This catalogue contains the parts for the model designed for the following spec.;

spec. code : E24.

7. SERIAL FRAME NUMBER

DR650SEM1 : JS1SP46A007500987～

COLOR CHART
TABLEAU DES COULEURS

COLOR NO. NO DE COULEUR	COLOR DESCRIPTION DESCRIPTION DE COULEUR	COLOR NO. NO DE COULEUR	COLOR DESCRIPTION DESCRIPTION DE COULEUR
019	SLD.BLACK	YYG	CDY.DARING RED
13L	MET.BRIGHT SILVER		
1ZY	MET.URBAN LIGHT GRAY		
20F	CDY.PRESIDENT MAROON		
291	SLD.BLACK 50% GLOSS		
30H	SLD.SPECIAL WHITE NO.2		
3WX	BLACK		
8YM	30H,019		
B7R	1ZY,YYG,YLF,20F,019		
B7S	1ZY,YYG,YLF,019		
B7T	019,YKY,1ZY,YBA,30H		
B7U	019,YKY,1ZY,30H		
BYD	T5N,T5P,13L		
CT5	YD8,019		
J7A	1ZY,019		
T5N	LTHR.NOBLE GRAY		
T5P	LTHR.BLACK		
YBA	PRL.SUZUKI DEEP BLUE NO.2		
YD8	MET.SONIC SILVER		
YKY	PRL.VIGOR BLUE		
YLF	MET.THUNDER GRAY		
YPT	MET.THUNDER GLAY NO.2		

COLOR NO. NO DE COULEUR	COLOR DESCRIPTION DESCRIPTION DE COULEUR	COLOR NO. NO DE COULEUR	COLOR DESCRIPTION DESCRIPTION DE COULEUR

FIG. 101A

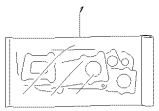

DR650SEM1_E24_101A
GASKET SET

FIG. 103A

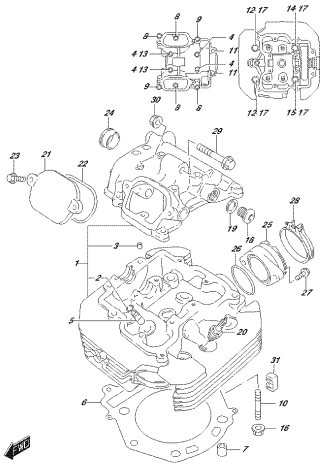

DR650SEM1_E24_103A
CYLINDER HEAD

FIG. 107A

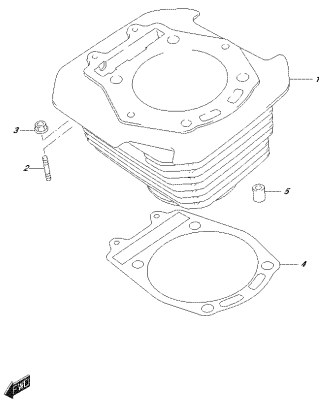

DR650SEM1_E24_107A
CYLINDER

FIG. 108A

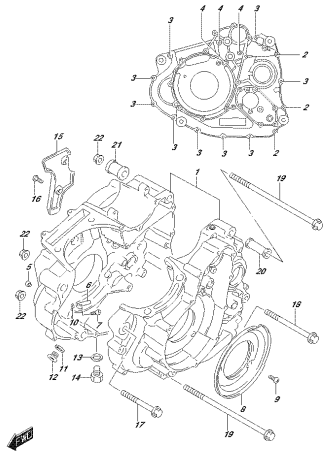

DR650SEM1_E24_108A
CRANKCASE

FIG. 112A

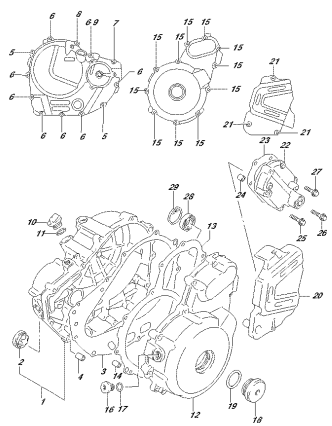

DR650SEM1_E24_112A
CRANKCASE COVER

FIG. 117A

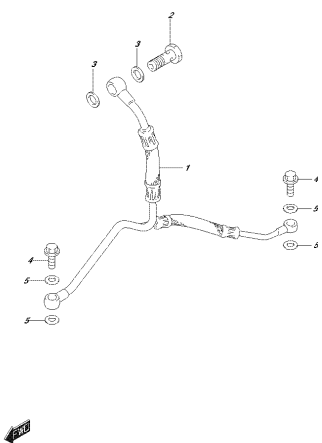

DR650SEM1_E24_117A
OIL PIPE

FIG. 120A

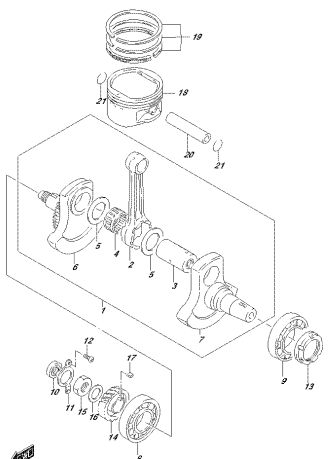

DR650SEM1_E24_120A
CRANKSHAFT

FIG. 122A

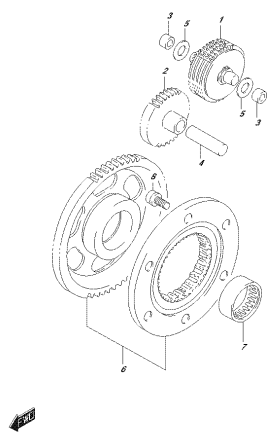

DR650SEM1_E24_122A
STARTER CLUTCH

FIG. 124A

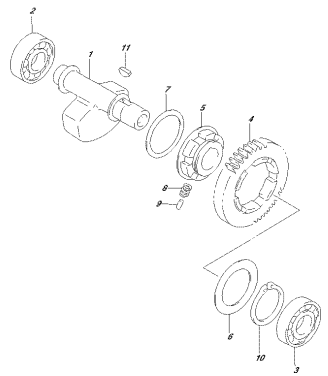

DRIVESHAFT_E24_124A
CRANKBALANCER

FIG. 126A

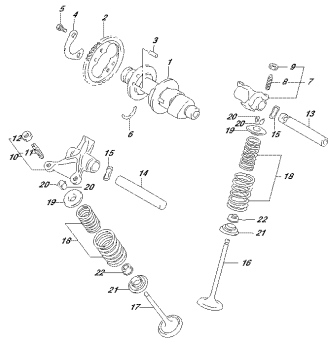

DRIVESHAFT_E24_126A
CAMSHAFT/VLVE

FIG. 127A

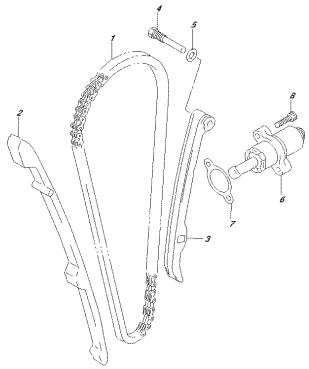

DRIVESHAFT_E24_127A
CAM CHAIN

FIG. 130A

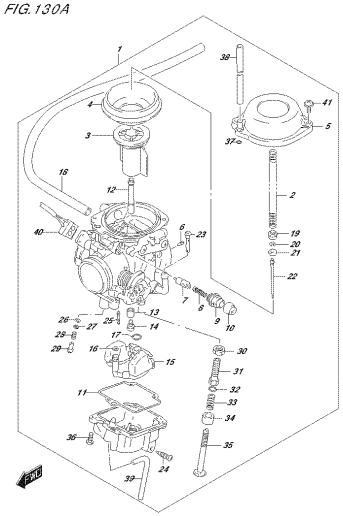

DRIVESHAFT_E24_130A
CARBURETOR

FIG. 155A

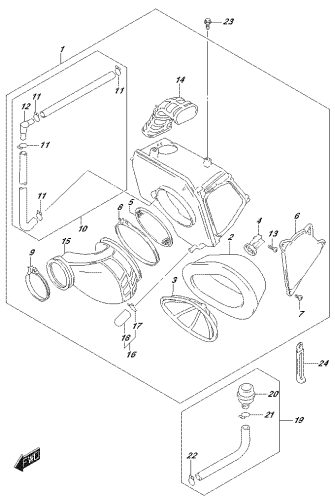

DRIVESHAFT_E24_155A
AIR CLEANER

FIG. 163A

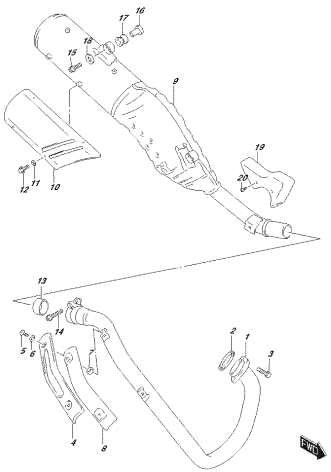

DRIVESHAFT_E24_163A
MUFFLER

FIG. 170A

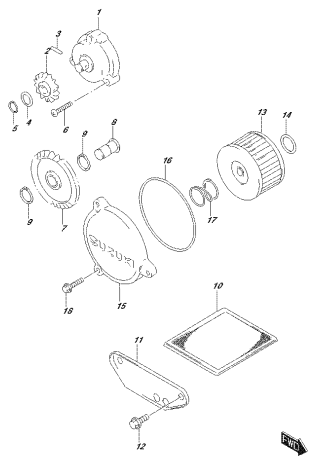

DRIVESHAFT_E24_170A
OIL PUMP

FIG. 178A

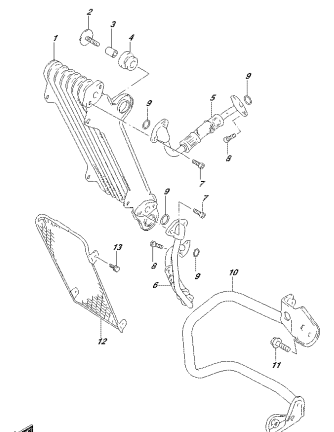

DRIVESHAFT_E24_178A
OIL COOLER

FIG.201A

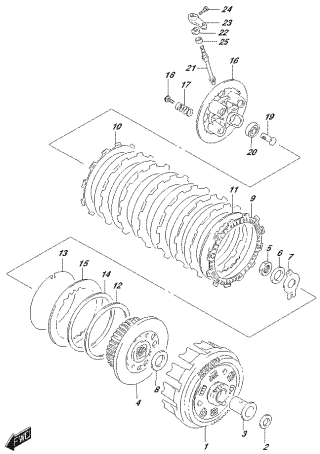

DR650SEM1_E24_201A
CLUTCH

FIG.206A

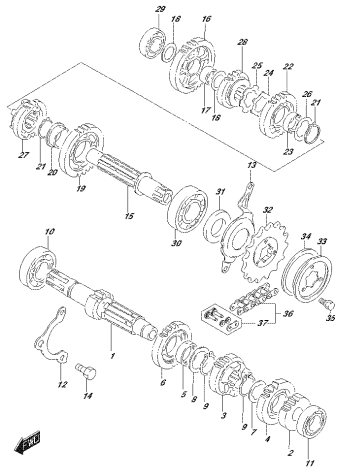

DR650SEM1_E24_206A
TRANSMISSION

FIG.212A

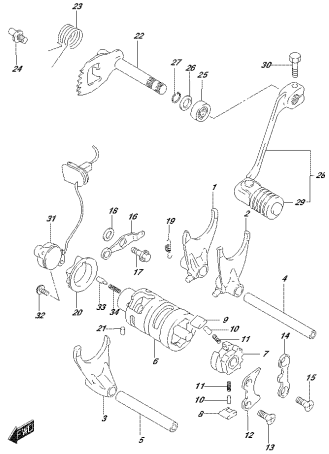

DR650SEM1_E24_212A
GEAR SHIFTING

FIG.301A

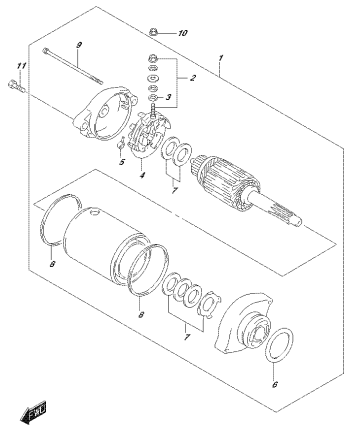

DR650SEM1_E24_301A
STARTING MOTOR

FIG.303A

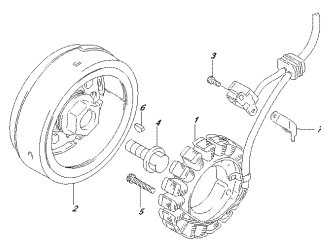

DR650SEM1_E24_303A
MAGNETO

FIG.310A

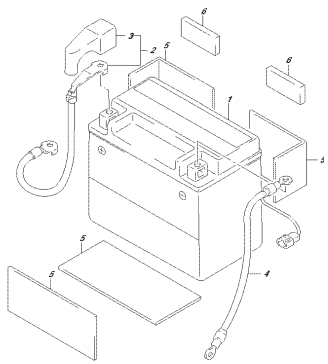

DR650SEM1_E24_310A
BATTERY

FIG.312A

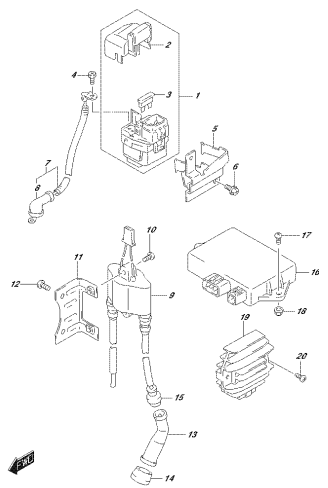

DR650SEM1_E24_312A
ELECTRICAL

FIG.330A

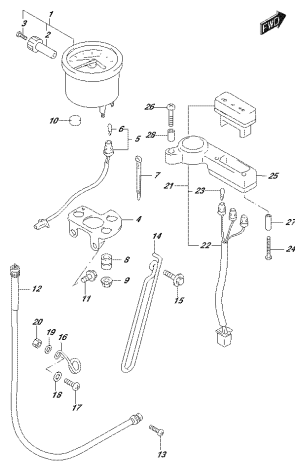

DR650SEM1_E24_330A
SPEEDOMETER

FIG.333A

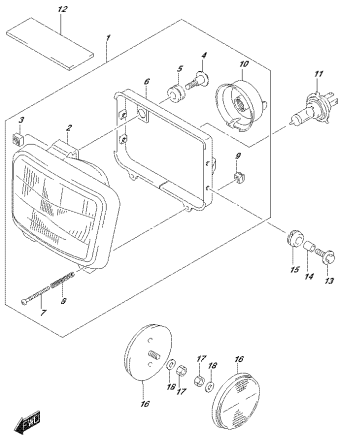

DR650SE(M1_E24_333A
HEADLAMP

FIG.334A

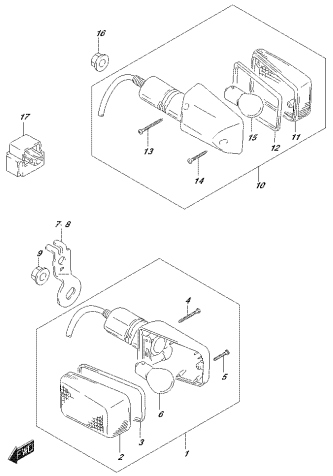

DR650SE(M1_E24_334A
TURNSIGNAL LAMP

FIG.339A

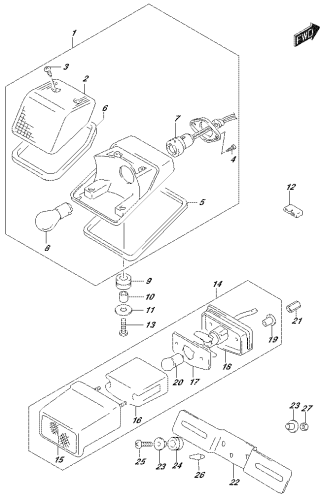

DR650SE(M1_E24_339A
REAR COMBINATION LAMP

FIG.350A

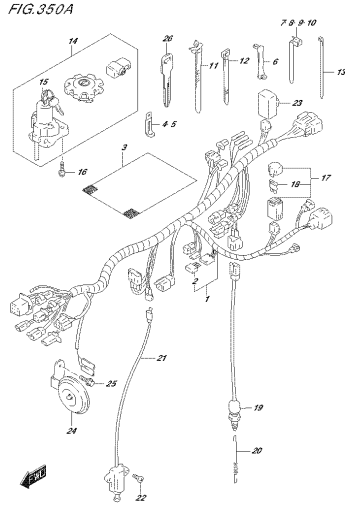

DR650SE(M1_E24_350A
WIRING HARNESS

FIG.355A

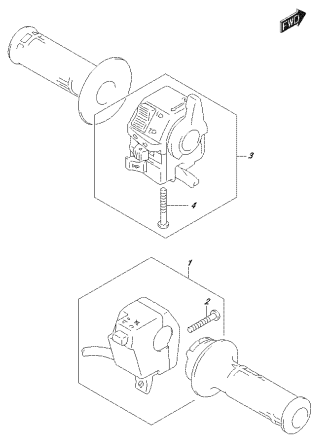

DR650SE(M1_E24_355A
HANDLE SWITCH

FIG.401A

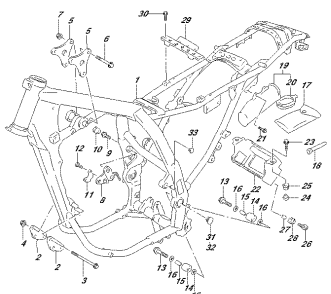

DR650SE(M1_E24_401A
FRAME

FIG.407A

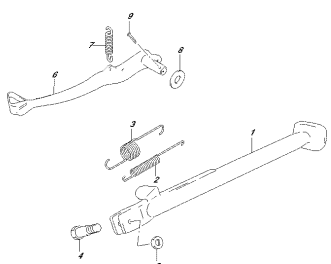

DR650SE(M1_E24_407A
STAND

FIG.415A

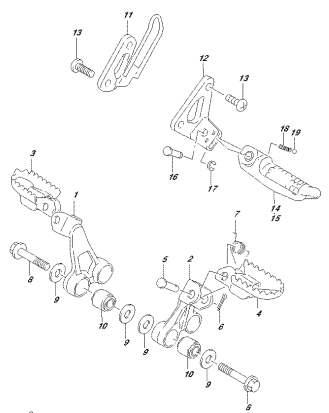

DR650SE(M1_E24_415A
FOOTREST

FIG.416A

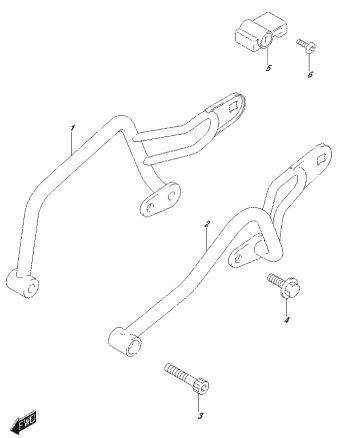

DR650SEM1_E24_416A
REAR STEP

FIG.420A

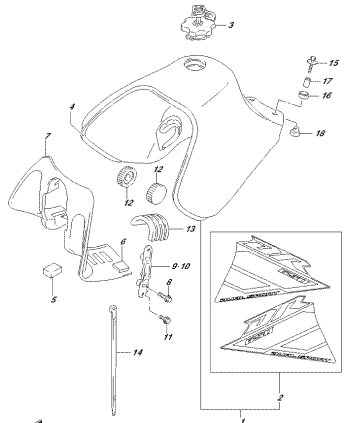

DR650SEM1_E24_420A
FUEL TANK

FIG.421A

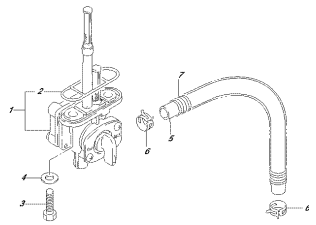

DR650SEM1_E24_421A
FUEL COCK

FIG.445A

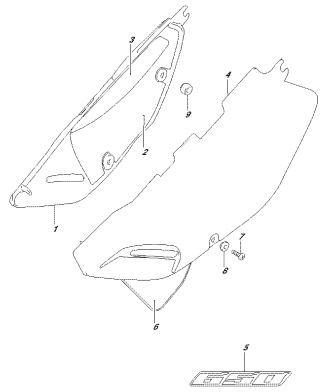

DR650SEM1_E24_445A
FRAME COVER

FIG.451A

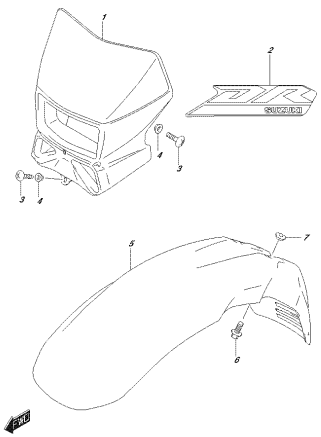

DR650SEM1_E24_451A
HEADLAMP HOUSING

FIG.462A

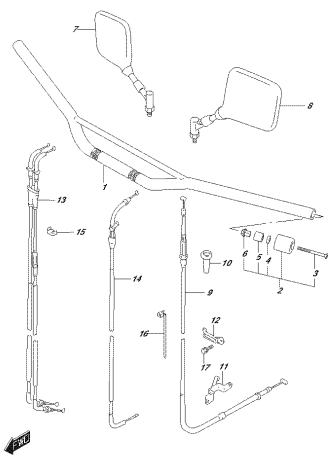

DR650SEM1_E24_462A
HANDLE BAR

FIG.468A

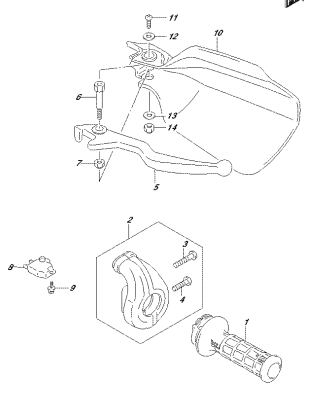

DR650SEM1_E24_468A
RH HANDLE LEVER

FIG.469A

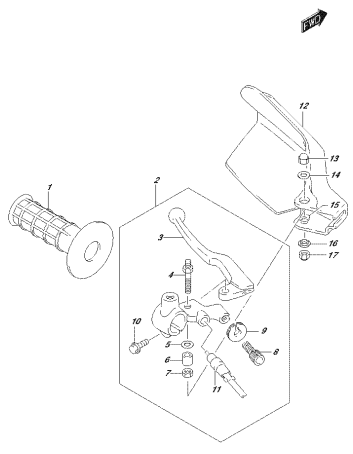

DR650SEM1_E24_469A
LH HANDLE LEVER

FIG.474A

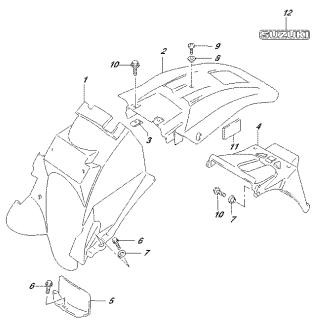

DR650SEM1_E24_474A
REAR FENDER

FIG.496A

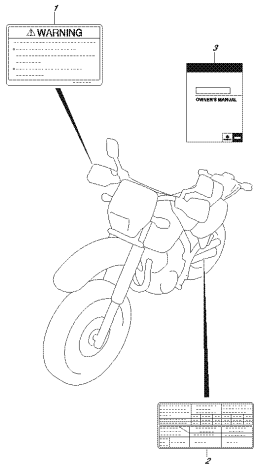

DR650SEM1_E24_496A
LABEL

FIG.505A

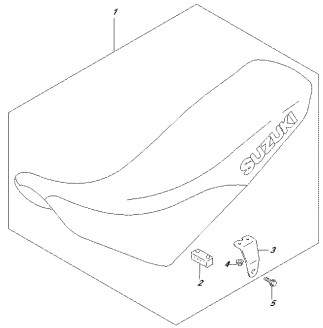

DR650SEM1_E24_505A
SEAT

FIG.521A

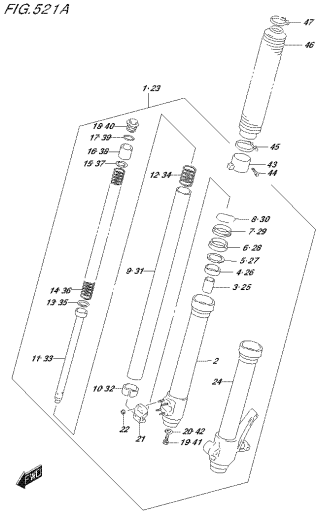

DR650SEM1_E24_521A
FRONT FORK DAMPER

FIG.524A

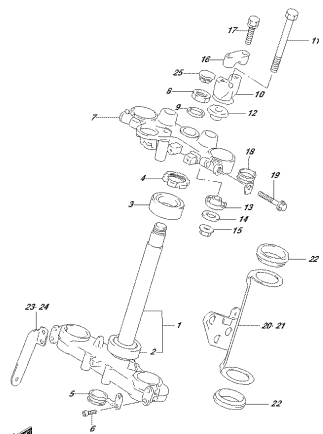

DR650SEM1_E24_524A
STEERING STEM

FIG.530A

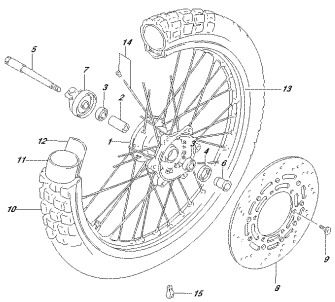

DR650SEM1_E24_530A
FRONT WHEEL

FIG.535A

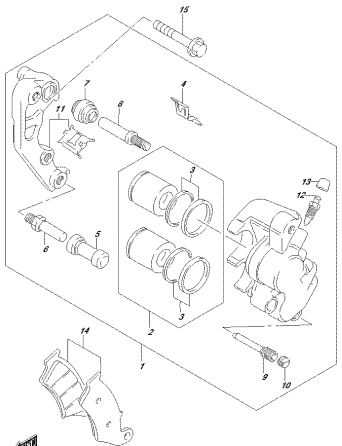

DR650SEM1_E24_535A
FRONT CALIPER

FIG.537A

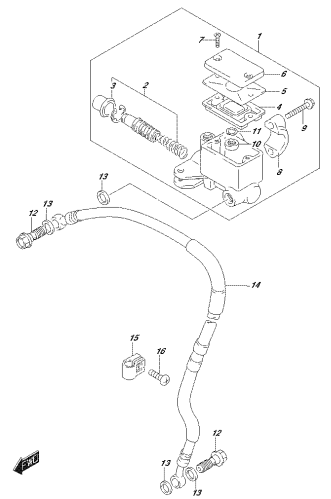

DR650SEM1_E24_537A
FRONT MASTER CYLINDER

FIG.541A

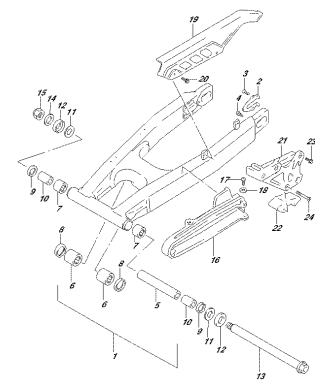

DR650SE(M1_E24_541A
REAR SWINGING ARM

FIG.543A

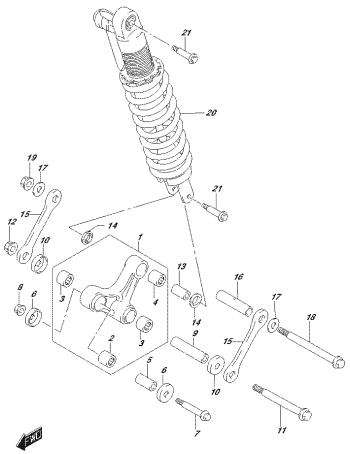

DR650SE(M1_E24_543A
REAR CUSHION LEVER

FIG.550A

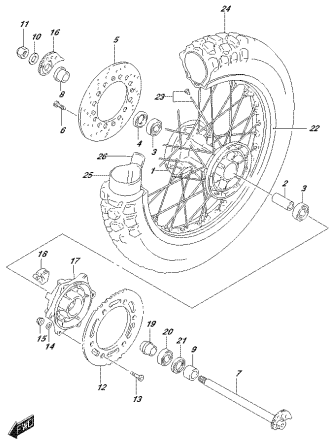

DR650SE(M1_E24_550A
REAR WHEEL

FIG.555A

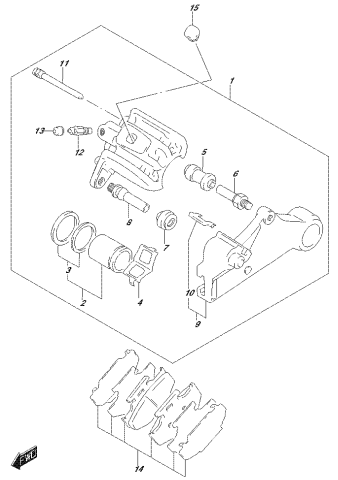

DR650SE(M1_E24_555A
REAR CALIPER

FIG.558A

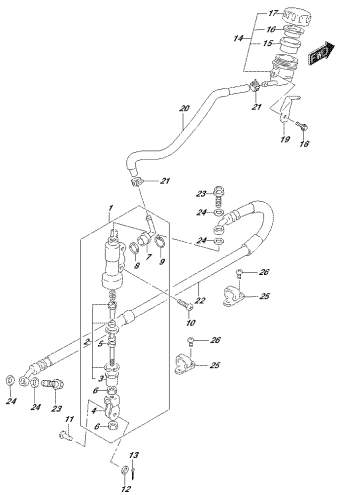

DR650SE(M1_E24_558A
REAR MASTER CYLINDER

FIG.101A

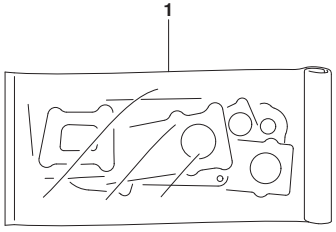

FIG.101A (1-B-2) GASKET SET

REF NO.	PART NO.	DESCRIPTION	Q'TY	REMARKS
1	11400-32874	GASKET SET	1	OPT
2	11141-32E00	.GASKET,CYLINDER HEAD	1	NOT ILLUSTRATED
3	11177-44B01	.O RING,INSPECTION CAP	1	NOT ILLUSTRATED
4	11241-04F20	.GASKET,CYLINDER	1	NOT ILLUSTRATED
5	11482-32E00	.GASKET,CLUTCH COVER	1	NOT ILLUSTRATED
6	11483-32E00	.GASKET,MAGNETO COVER	1	NOT ILLUSTRATED
7	11485-12D01	.GASKET,GEAR SHIFT COVER	1	NOT ILLUSTRATED
8	12837-24A10	.GASKET,TENSIONER ADJUSTER	1	NOT ILLUSTRATED
9	14181-22D01	.GASKET,EXHAUST PIPE	1	NOT ILLUSTRATED
10	09280-15007	.O-RING (D:2.4,ID:15.8)	1	NOT ILLUSTRATED
11	09280-17003	.O RING (D:3.1,ID:16.8)	1	NOT ILLUSTRATED
12	09280-46002	.O-RING (D:2.4,ID:46.0)	1	NOT ILLUSTRATED
13	09280-72001	.O RING (D:2.4,ID:73)	1	NOT ILLUSTRATED

FIG.103A

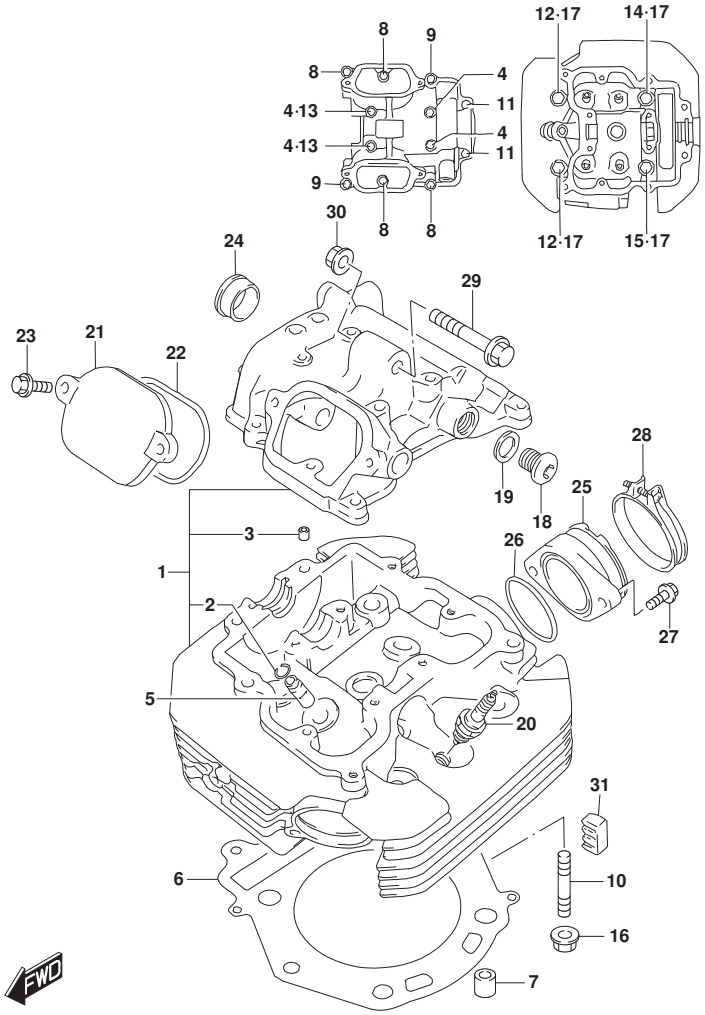

FIG.103A (1-B-3) CYLINDER HEAD

REF NO.	PART NO.	DESCRIPTION	Q'TY	REMARKS
1	11100-32E22	HEAD ASSY, CYLINDER	1	
2	09381-10004	.SNAP RING (10X85)	4	
3	09206-08001	.PIN (6.2X8X11)	2	
4	09103-06102	.BOLT (6X55)	4	
5	11115-32E70	GUIDE,VALVE (OS:0.3)	4	OPT
6	11141-32E00	GASKET,CYLINDER HEAD	1	
7	04211-13189	PIN	2	
8	01550-0625A	BOLT	4	
9	01550-0630A	BOLT (L:30)	2	
10	09108-08142	BOLT,STUD (L:30)	2	
11	09103-06167	BOLT (6X115)	2	
12	09103-10178	BOLT (10X180)	2	
13	09168-06023	GASKET (5.8X13X1.2)	2	
14	09103-10179	BOLT (L:190)	1	
15	09103-10180	BOLT (L:200)	1	
16	08316-1008A	NUT	2	
17	09168-10017	GASKET (10.5X22X2)	4	
18	09248-14011	PLUG (14X12)	2	
19	09168-14002	GASKET (13.8X18.8X4.8)	2	
20-1	#09482-00460	SPARK PLUG (CR10E)	2	
20-2	#09482-00461	SPARK PLUG (U31ESR-N)	2	
20-3	#09482-00458	SPARK PLUG (CR9E)	2	
20-4	#09482-00459	SPARK PLUG (U27ESR-N)	2	
21	11175-44B00	CAP,INSPECTION	2	
22	11177-44B01	O RING,INSPECTION CAP	2	
23	01550-0620A	BOLT	4	
24	09241-25007	PLUG (OD:30)	1	
25	13110-32E00	PIPE,INTAKE	1	
26	09280-46002	O-RING (D:2.4,ID:46.0)	1	
27	09126-06014	SCREW (6X16)	2	
28	09402-58208	CLAMP	1	
29	09103-08332	BOLT (8X53)	1	
30	08319-3108A	NUT	1	
31	11151-32E00	PAD,CYLINDER HEAD RUBBER	1	

FIG.107A

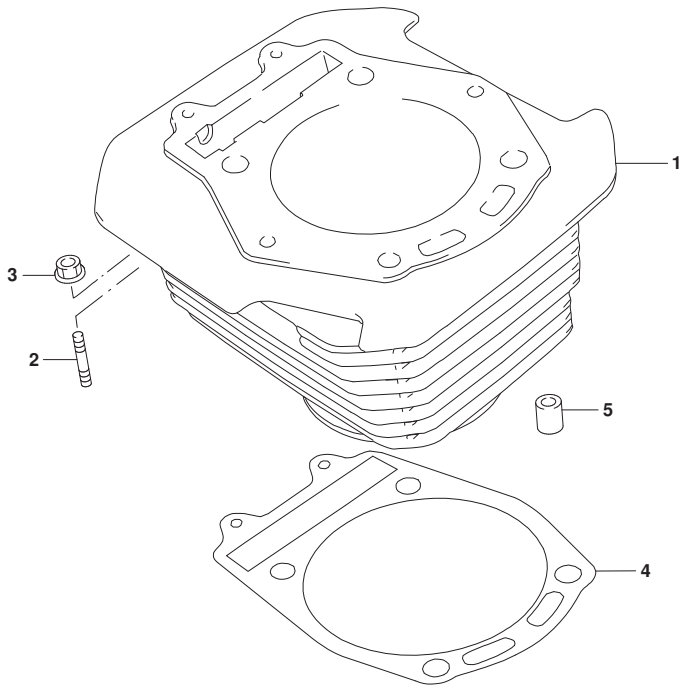

FIG.107A (1-B-4) CYLINDER

REF NO.	PART NO.	DESCRIPTION	Q'TY	REMARKS
1	11211-32E10-0F0	CYLINDER	1	
2	01421-0620A	BOLT,STUD	2	
3	08316-1006A	NUT	2	
4	11241-04F20	GASKET,CYLINDER	1	
5	04211-13189	PIN	2	

FIG.108A

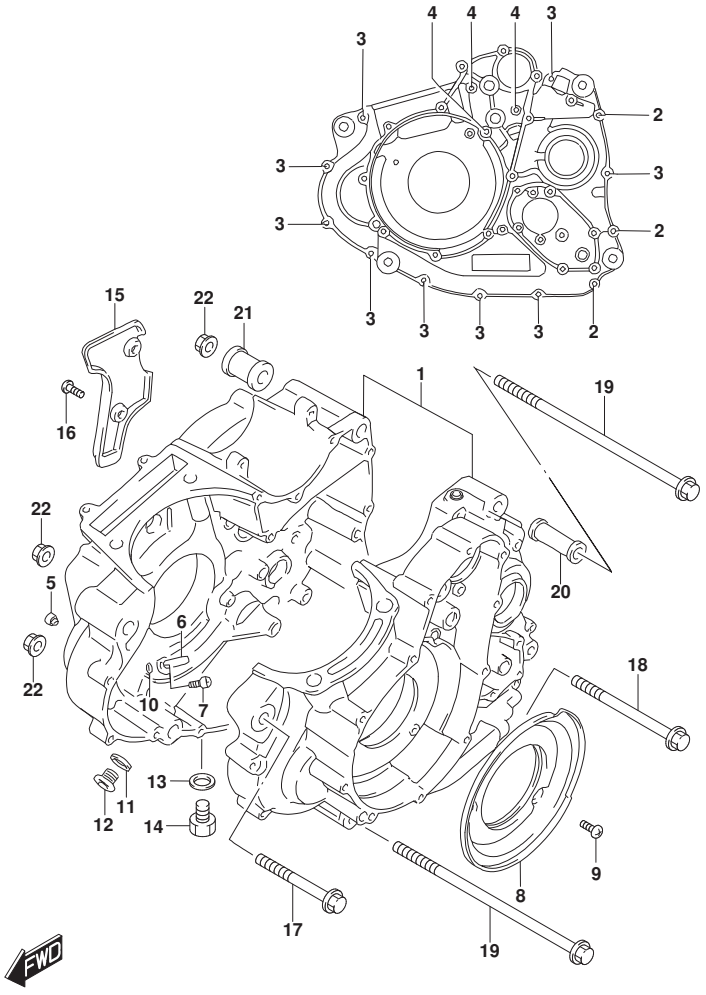

FIG.108A (1-B-5) CRANKCASE

REF NO.	PART NO.	DESCRIPTION	Q'TY	REMARKS
1	11300-32881	CRANKCASE SET	1	
2	01547-0660A	.BOLT	4	
3	01547-0640A	.BOLT	9	
4	01547-0680A	.BOLT	3	
5	11180-43410	.JET,OIL GALLERY	1	
6	11390-04F00	JET,PISTON COOLING	1	
7	09106-06075	BOLT (6X12)	1	
8	11323-32E00	SEPARATOR,CRANKCASE OIL	1	
9	02112-0612A	SCREW	3	
10	09280-04004	O-RING (D:1.2,ID:4)	1	
11	09168-14002	GASKET (13.8X18.8X4.8)	1	
12	09248-14011	PLUG (14X12)	1	
13	09168-14002	GASKET (13.8X18.8X4.8)	1	
14	09247-14026	PLUG (14X12)	1	
15	11317-32E00	COVER,BREATHER	1	
16	02112-0612A	SCREW	2	
17	09103-10110	BOLT (10X100)	1	
18	09103-10237	BOLT (10X130)	1	
19	09103-10239	BOLT (10X235)	2	
20	11610-45410	SPACER (L:65)	1	
21	11610-20C00	SPACER,ENGINE MOUNT,L27 (L:27)	1	
22	09159-10115	NUT (M10)	4	

FIG.112A

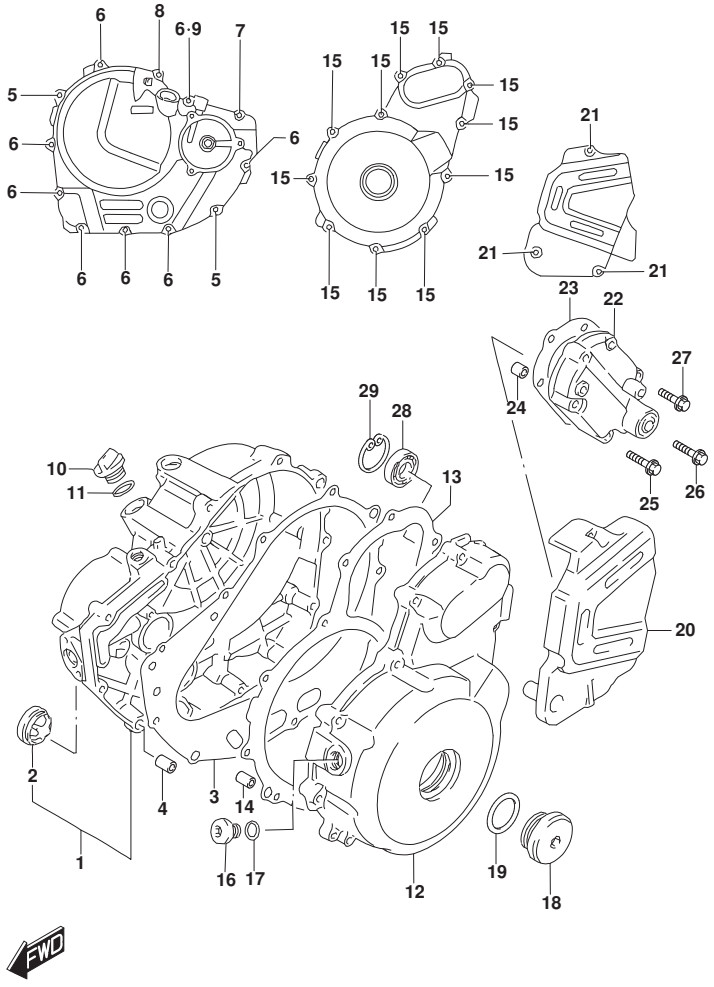

FIG.112A (1-B-6) CRANKCASE COVER

REF NO.	PART NO.	DESCRIPTION	Q'TY	REMARKS
1	11340-32E00	COVER,CLUTCH	1	
2	11971-33210	.LENS,OIL LEVEL CHECK	1	
3	11482-32E00	GASKET,CLUTCH COVER	1	
4	04211-09149	PIN (8.5X18X2.3)	2	
5	01547-0645A	BOLT	2	
6	01547-0635A	BOLT	8	
7	01547-0630A	BOLT	1	
8	01547-0625A	BOLT	1	
9	09168-06023	GASKET (5.8X13X1.2)	1	
10	09259-20019	PLUG (20X10)	1	
11	09280-17003	O RING (D:3.1,ID:16.8)	1	
12	11351-32E01	COVER,MAGNETO	1	
13	11483-32E00	GASKET,MAGNETO COVER	1	
14	04211-09149	PIN (8.5X18X2.3)	1	
15	01547-0630A	BOLT	11	
16	09248-14011	PLUG (14X12)	1	
17	09168-14002	GASKET (13.8X18.8X4.8)	1	
18	09259-36016-20H	PLUG (36X10,SILVER)	1	
19	09280-33004	O-RING (D:3.1,ID:32.7)	1	
20	11361-32E00	COVER,ENG SPROCKET	1	
21	01547-0635A	BOLT	3	
22	11371-12D30	COVER,GEAR SHF	1	
23	11485-12D01	GASKET,GEAR SHIFT COVER	1	
24	04211-09149	PIN (8.5X18X2.3)	2	
25	01547-0635A	BOLT	1	
26	01547-0630A	BOLT	4	
27	01547-0620A	BOLT	1	
28	09262-12001	BEARING (12X28X8)	1	
29	08331-41289	CIRCLIP	1	

FIG.117A

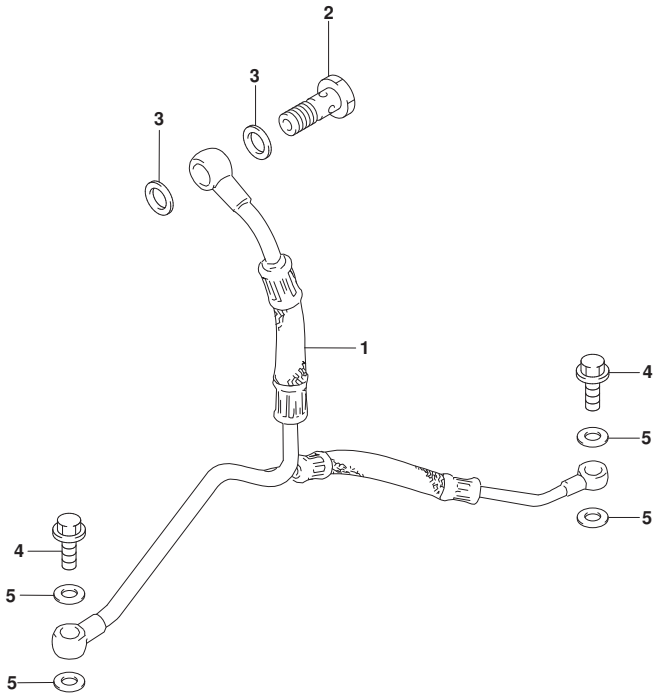

FIG.117A (1-B-7) OIL PIPE

REF NO.	PART NO.	DESCRIPTION	Q'TY	REMARKS
1	16480-32E10	PIPE,T/M&CSHAFT OIL	1	
2	09360-12008	UNION (12X27)	1	
3	09168-12017	GASKET (12X17X1)	2	
4	09360-10066	UNION (10X24)	2	
5	09168-10007	GASKET (10.1X16X1)	4	

FIG.120A

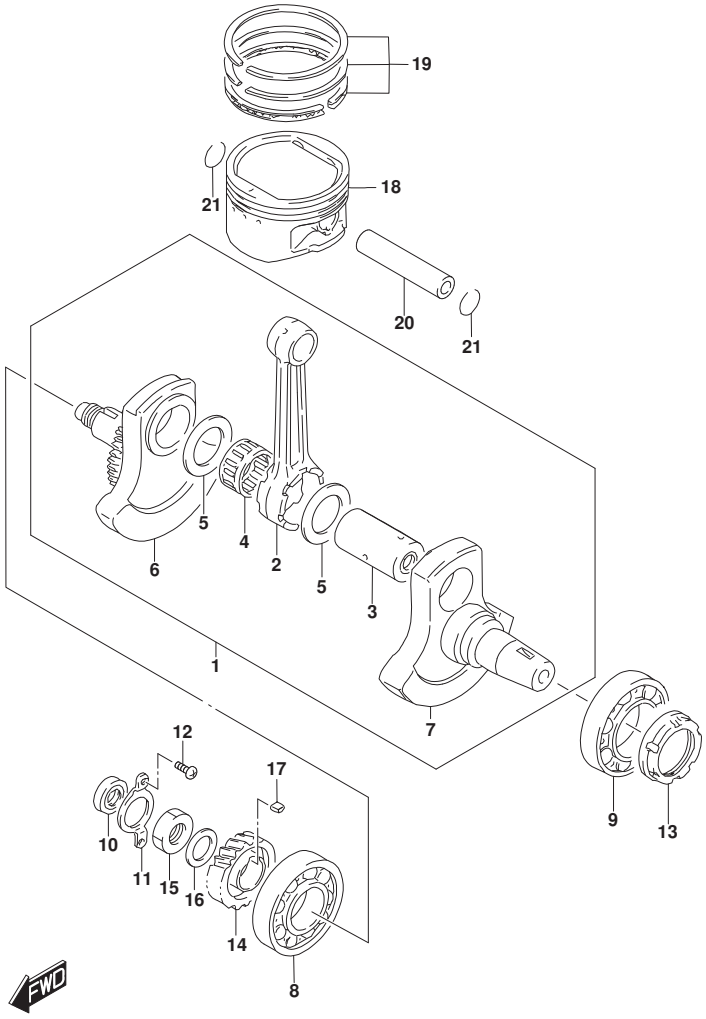

FIG.120A (1-B-8) CRANKSHAFT

REF NO.	PART NO.	DESCRIPTION	Q'TY	REMARKS
1	12000-32820	CRANKSHAFT SET	1	
2	12161-32E00	.CONNROD	1	
3	12211-32E00	.PIN,CRANK	1	
4	09263-37004-0C0	.BEARING (37X47X25)	1	
5	09160-37006	.WASHER (37X55X1)	2	
6	12221-32810	.CRANKSHAFT SET,RH	1	
7	12261-32E00	.CRANKSHAFT LH	1	
8	09262-40008	BEARING (40X80X18)	1	
9	09262-45011	BEARING (45X85X19)	1	
10	09282-16002	OIL SEAL (16X30X6)	1	
11	12548-37400	PLATE, RH	1	
12	02112-0508A	SCREW	2	
13	12664-04F00	NUT,CRANKSHAFT BRG LH	1	
14	21111-32E00	GEAR,PRIMARY DRIVE (NT:28)	1	
15	09140-20013	NUT	1	
16	09164-20003	WASHER	1	
17	09420-05007	KEY	1	
18	12111-32E00-0F0	PISTON	1	
19	12140-32E10	RING SET,PISTON	1	
20	12151-14A01	PIN,PISTON	1	
21	09381-23003	CIRCLIP	2	

FIG.122A

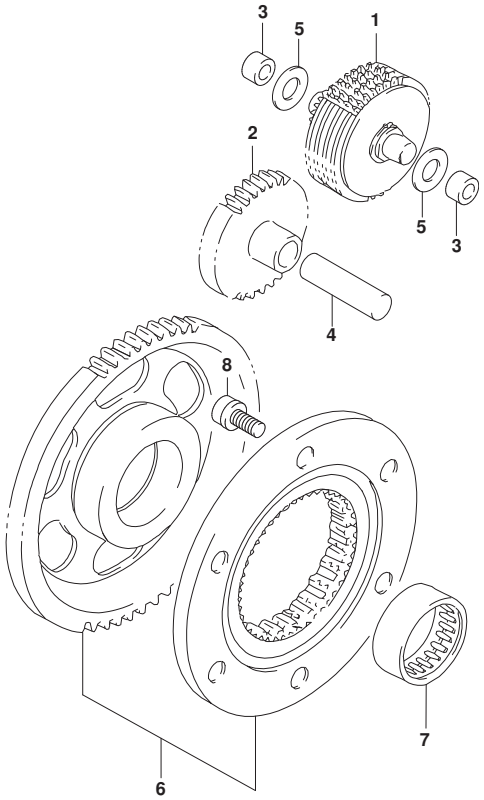

FIG.122A (1-B-9) STARTER CLUTCH

REF NO.	PART NO.	DESCRIPTION	Q'TY	REMARKS
1	12600-12D01	LIMITER ASSY,STARTER IDLE GEAR (NT:44)	1	
2	12612-12D01	GEAR,STARTER IDLE,NO.2 (NT:18/27)	1	
3	12618-31D01	BUSH,LIMITER GEAR SHAFT	2	
4	09202-12002	PIN	1	
5	08211-10221	WASHER	2	
6	12600-09860	CLUTCH SET,STARTER (NT:73)	1	
7	09263-31009	BEARING (31X39X17.8)	1	
8	09106-08106	BOLT (8X20)	6	

FIG.124A

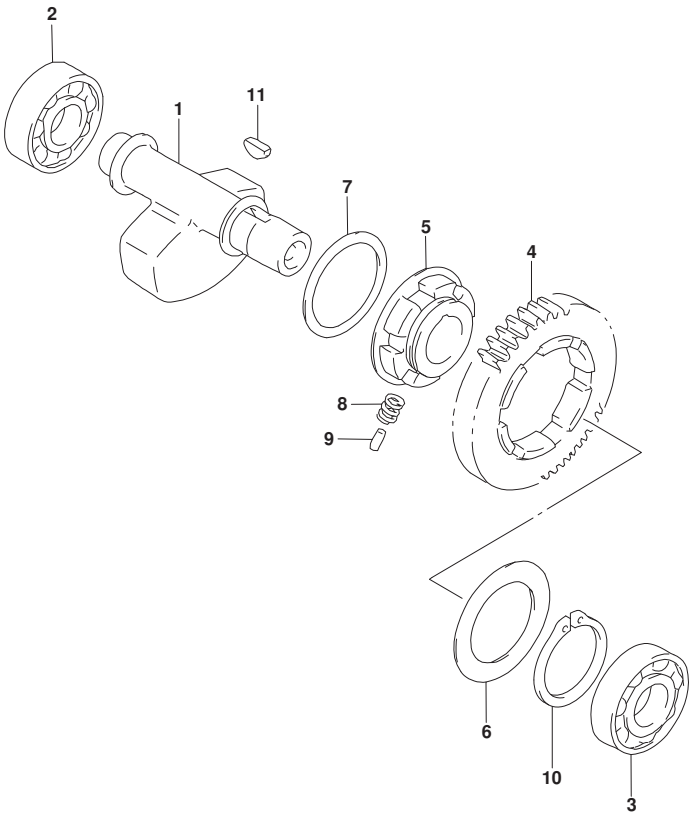

FIG.124A (1-B-10) CRANK BALANCER

REF NO.	PART NO.	DESCRIPTION	Q'TY	REMARKS
1	12651-32E00	BALANCER,CRANK	1	
2	09262-22029	BEARING (22X56X16)	1	
3	09262-20121	BEARING (20X47X14)	1	
4	12666-32E00	GEAR,CRK BAL DRIVEN (NT:43)	1	
5	12669-32E00	RACE,CRK BAL DRIVEN GR INNER	1	
6	09164-38003	WASHER	1	
7	08211-38582	WASHER	1	
8	09440-09031	SPRING	6	
9	09202-04017	PIN (4.5X9.5)	3	
10	08331-31383	CLIP	1	
11	09420-04008	KEY (B:4,D:16,H6.5)	1	

FIG.126A

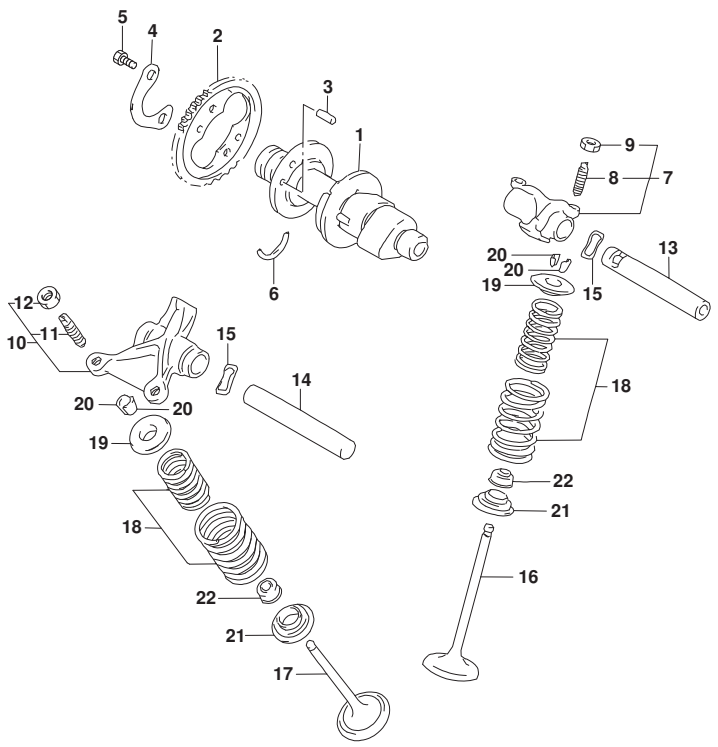

FIG.126A (1-B-11) CAMSHAFT/VALVE

REF NO.	PART NO.	DESCRIPTION	Q'TY	REMARKS
1	12710-32E01	CAMSHAFT	1	
2	12741-32E00	SPROCKET,CAM SHAFT (NT:38)	1	
3	09261-05005	PIN (5X8)	1	
4	12747-44B00	WASHER,SPROCKET	1	
5	09100-06166	BOLT (6X10.5)	2	
6	09390-22002	C RING	1	
7	12840-32E00	ARM,VALVE ROCKER,IN	1	
8	12842-38A00	.SCREW,TAPPET ADJUSTING	2	
9	12843-32400	.NUT,ADJUSTING SCREW	2	
10	12850-32E00	ARM,VALVE ROCKER,EX	1	
11	12842-38A00	.SCREW,TAPPET ADJUSTING	2	
12	12843-32400	.NUT,ADJUSTING SCREW	2	
13	12861-14D50	SHAFT,VALVE ROCKER ARM,IN	1	
14	12871-14D50	SHAFT,VALVE ROCKER ARM,EX	1	
15	09164-12018	WASHER (12.7X18.1X0.2)	2	
16	12911-19B00	VALVE,INTAKE	2	
17	12912-42A00	VALVE,EXHAUST	2	
18	12920-32E00	SPRING SET,VALVE	4	
19	12931-33201	RETAINER,VALVE SPRING	4	
20	12932-24400	COTTER,VALVE	8	
21	12933-81400	SEAT,VALVE SPRING	4	
22	09289-05015	OIL SEAL (5.5X11X8.2)	4	

FIG.127A

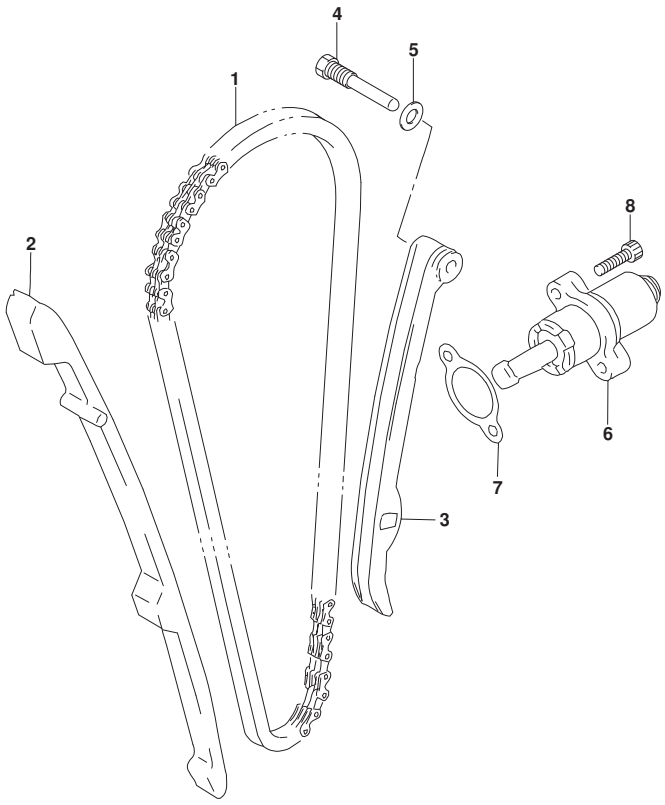

FIG.127A (1-B-12) CAM CHAIN

REF NO.	PART NO.	DESCRIPTION	Q'TY	REMARKS
1	12760-32E00	CHAIN,CAM SHAFT DRIVE (120LE)	1	
2	12771-32E00	GUIDE,CAM CHAIN	1	
3	12811-32E00	TENSIONER,CAM CHAIN	1	
4	12812-32400	BOLT,CAM CHAIN TENSIONER	1	
5	09168-08008	GASKET (8.2X14X1)	1	
6	12830-32E00	ADJUSTER ASSY,TENSIONER	1	
7	12837-24A10	GASKET,TENSIONER ADJUSTER	1	
8	07130-0625A	BOLT	2	

FIG.130A

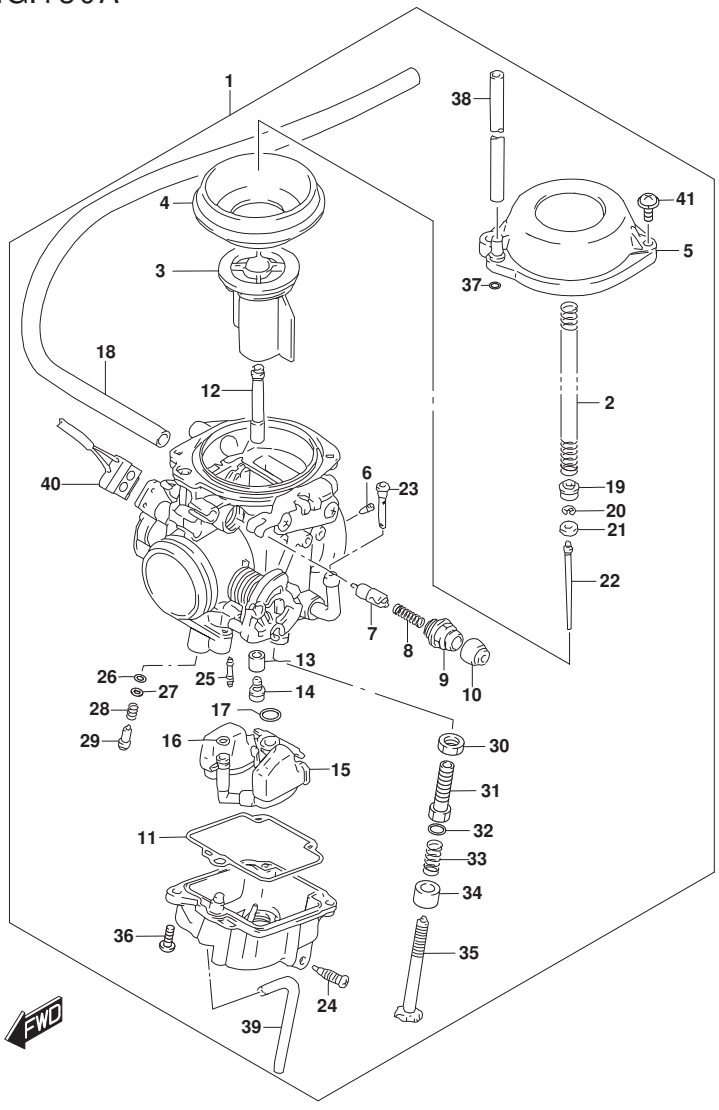

FIG.130A (1-B-13) CARBURETOR

REF NO.	PART NO.	DESCRIPTION	Q'TY	REMARKS
1	13200-32E31	CARBURETOR ASSY	1	
2	13417-17D00	.SPRING	1	
3	13501-32E00	.VALVE,PISTON	1	
4	13507-07D02	.DIAPHRAGM	1	
5	13502-41C00	.COVER,DIAPHRAGM	1	
6	09493-20007	.JET,AIR (#1.0)	1	
7	13411-12D00	.PLUNGER	1	
8	13417-22010	.SPRING	1	
9	13418-43410	.HOLDER,GUIDE	1	
10	13681-04011	.CAP	1	
11	13258-44B00	.GASKET,FLOAT CHAMBER	1	
12	09494-00884	.JET,NEEDLE (Y-5M)	1	
13	13331-07D00	.RING	1	
14	09491-28010	.JET, MAIN (#140)	1	
15	13250-12EH0	.FLOAT/NEEDLE VALVE ASSY	1	
16	13374-46710	.O-RING	1	
17	13374-35C00	.O RING,NEEDLE VALVE SEAT	1	
18	13683-32E01	.HOSE	1	
19	13331-12D00	.RING	1	
20	13394-31210	.CLIP,NEEDLE	1	
21	13387-07D00	.RING	1	
22	13383-32E00	.NEEDLE,JET (6F19-3)	1	
23	13236-12C00	.FILTER	1	
24	13247-13A00	.SCREW,DRAIN	1	
25	09492-42010	.JET, PILOT (#42.5)	1	
26	13295-29900	.O-RING	1	
27	13291-29900	.WASHER (14X17)	1	
28	13268-47070	.SPRING (NT:45)	1	
29	13279-47070	.SCREW,PILOT (1 1/2)	1	
30	13607-37010	.NUT	1	
31	13267-31D00	.ADJUSTER	1	
32	13615-43010	.WASHER	1	
33	13271-33C00	.SPRING	1	
34	13432-95210	.RING	1	
35	13267-31D10	.ADJUSTER	1	

FIG.130A

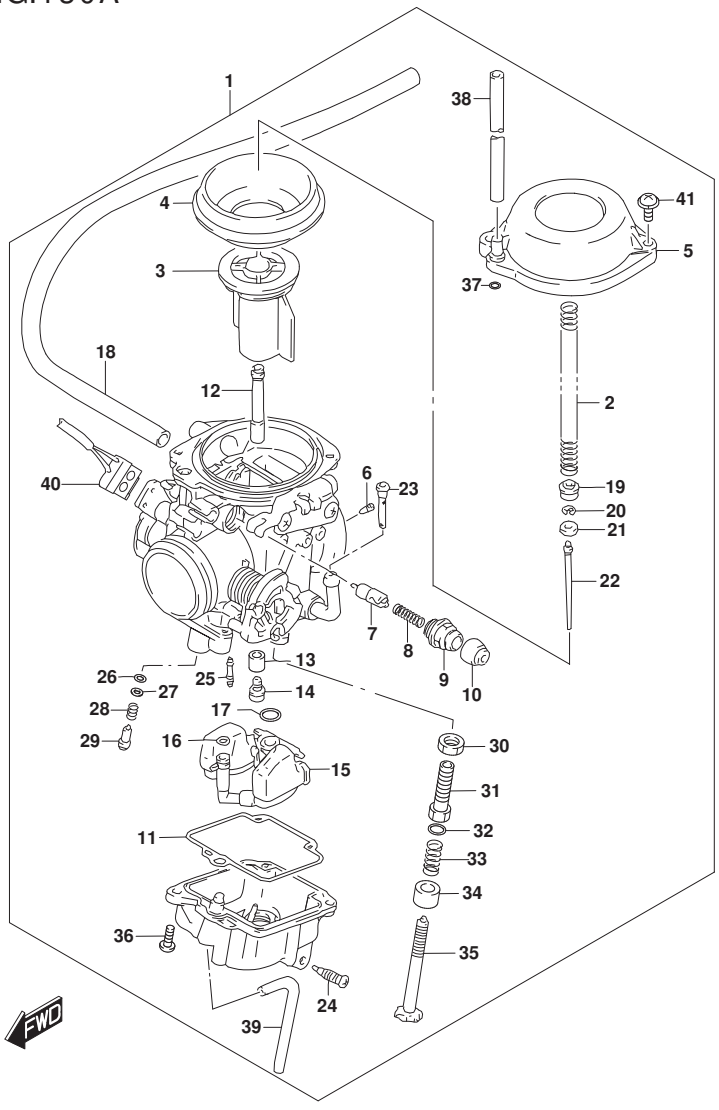

FIG.130A (1-B-14) CARBURETOR

REF NO.	PART NO.	DESCRIPTION	Q'TY	REMARKS
36	13601-05148-XC0	.SCREW (6X14)	2	
37	13278-02340	.O-RING	1	
38	09355-45855-600	.HOSE (4.5X8.5X600)	1	
39	13684-32E11	.HOSE	1	
40	13630-38E00	.SWITCH,THROTTLE	1	
41	02112-7516A	.SCREW	2	

FIG.155A

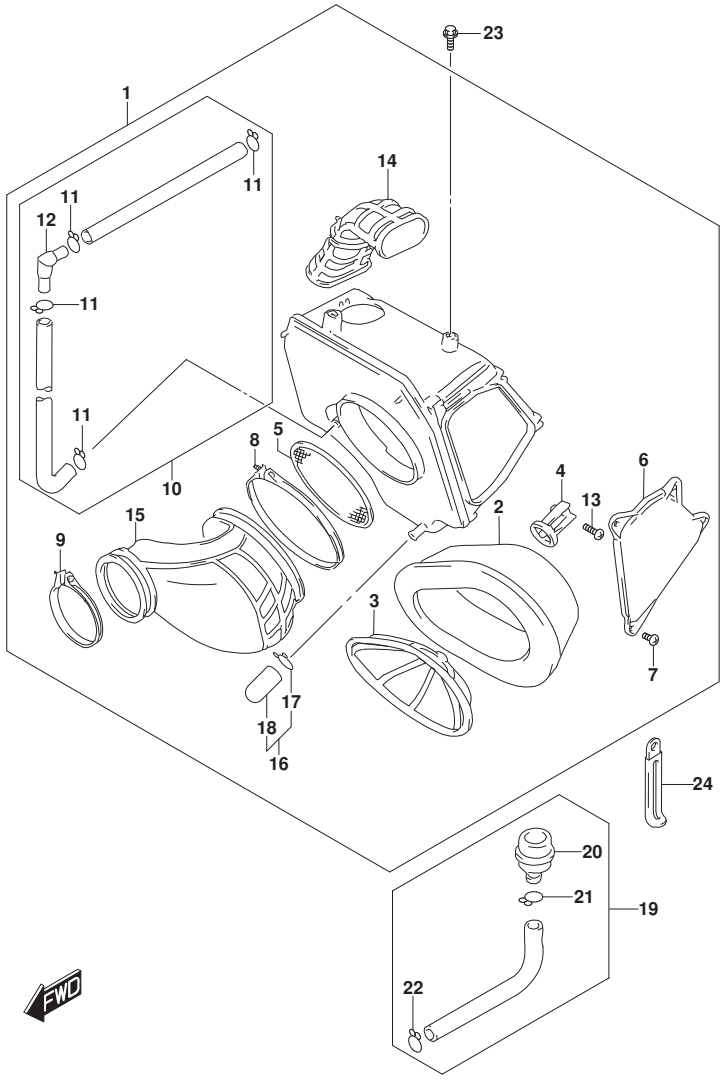

FIG.155A (1-B-15) AIR CLEANER

REF NO.	PART NO.	DESCRIPTION	Q'TY	REMARKS
1	13700-32E00	CLEANER ASSY,AIR	1	
2	13780-32E00	.FILTER	1	
3	13791-32E00	.HOLDER,FILTER	1	
4	13792-32E00	.STOPPER,HOLDER	1	
5	13810-14D02	.TRAP,FRAME	1	
6	13740-32E00	.CAP,CLEANER	1	
7	02142-0512A	.SCREW	4	
8	13826-14D01	.CLAMP,OUTLET TUBE (CLEANER SIDE)	1	
9	09402-64203	.CLAMP (L:25)	1	
10	13850-32E00	.TUBE ASSY,BREATHER	1	
11	09401-14301	..CLIP	4	
12	13858-14D20	..JOINT	1	
13	02142-0620A	.SCREW	1	
14	13891-32E00	.TUBE,INLET	1	
15	13881-32E00	.TUBE,OUTLET	1	
16	13856-19B03	.PLUG ASSY,DRAIN	1	
17	09401-14101	..CLIP (ID:14.5)	1	
18	13859-41B10	..PLUG	1	
19	13800-32E00	CLEANER ASSY,AIR,NO.2	1	
20	18780-32E00	.FILTER,2ND AIR CLEANER	1	
21	09401-16401	.CLIP (ID:16.5)	1	
22	09401-14301	.CLIP	1	
23	01550-0612A	BOLT	3	
24	09404-06030	CLAMP (L:80)	1	

FIG.163A

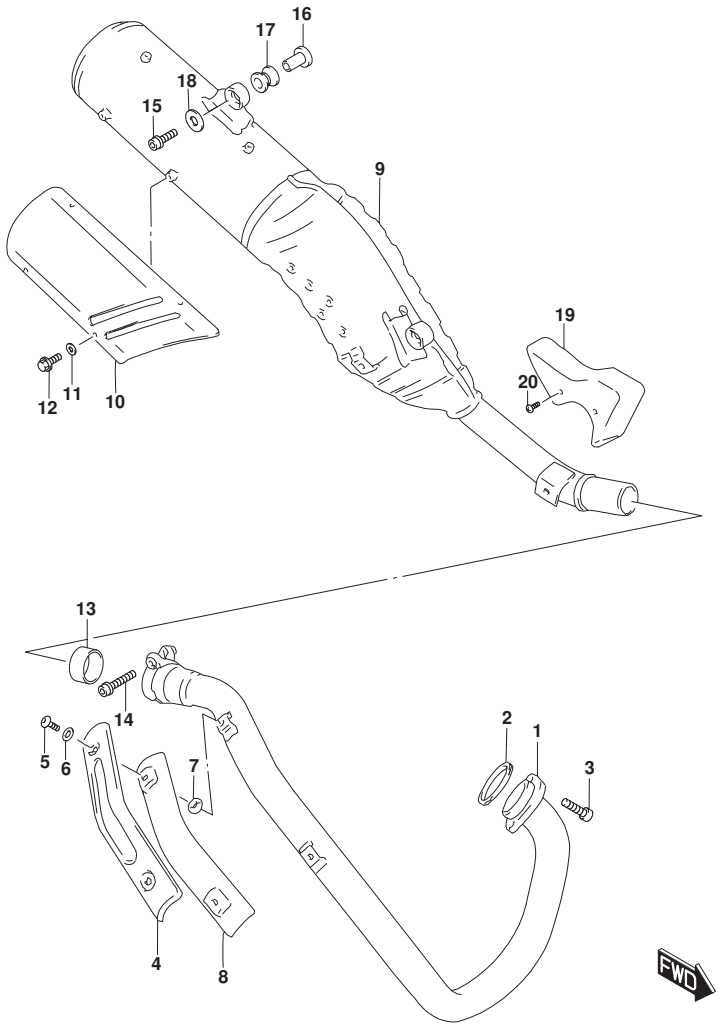

FIG.163A (1-B-16) MUFFLER

REF NO.	PART NO.	DESCRIPTION	Q'TY	REMARKS
1	14150-32E20	PIPE, EXHAUST	1	
2	14181-22D01	GASKET,EXHAUST PIPE	1	
3	07130-0825A	BOLT	2	
4	14180-32E00	COVER,EXH PIPE	1	
5	09139-06091	SCREW (6X12)	2	
6	09160-06082	WASHER (6.5X13X1.0)	2	
7	09168-06122	GASKET (6X16X1.4)	2	
8	14186-32E00	COVER,EXH PIPE INNER	1	
9	14310-32E21	BODY,MUFFLER	1	
10	14781-32E00	COVER,MUF	1	
11	09160-06082	WASHER (6.5X13X1.0)	4	
12	09139-06078	SCREW (6X10)	4	
13	14771-32E00	CONNECTOR,MUF	1	
14	07120-0835A	BOLT	1	
15	09106-08193	BOLT (8X30)	3	
16	09180-08151	SPACER (8.6X12X17.5)	3	
17	09320-12043	CUSHION	3	
18	09160-08135	WASHER (8.5X28X1.5)	3	
19	14782-32E01	COVER, CONNECTOR CLAMP	1	
20	09139-06078	SCREW (6X10)	2	

FIG.170A

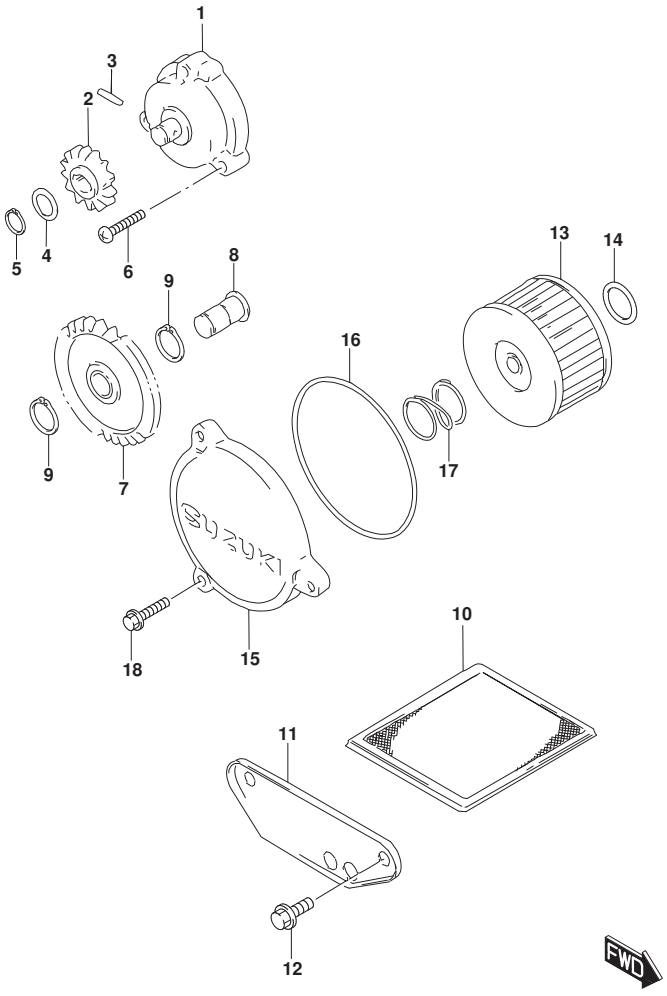

FIG.170A (1-C-2) OIL PUMP

REF NO.	PART NO.	DESCRIPTION	Q'TY	REMARKS
1	16400-32E00	PUMP ASSY,ENG OIL	1	
2	16331-32E00	GEAR,ENG OIL PUMP DRIVEN (NT:15)	1	
3	09261-04009	PIN (4X15.8)	1	
4	09181-10186	SHIM (10X20X0.5)	1	
5	08331-31109	CIRCLIP	1	
6	02112-0625A	SCREW	3	
7	16321-32E00	GEAR,OIL PUMP DRIVE (NT:30)	1	
8	16322-32E01	SHIFT,ENG OIL PUMP DRIVE GEAR	1	
9	08331-3112A	CIRCLIP	2	
10	16520-32E01	STRAINER,ENG OIL	1	
11	16523-32E00	CAP,OIL STRAINER	1	
12	09103-06285	BOLT (6X12)	2	
13	16510-37450	FILTER ASSY,ENG OIL	1	
14	09280-15007	O-RING (D:2.4,ID:15.8)	1	
15	16512-14D00	CAP,OIL FILTER	1	
16	09280-72001	O RING (D:2.4,ID:73)	1	
17	09440-21006	SPRING	1	
18	01547-0616A	BOLT	3	

FIG.178A

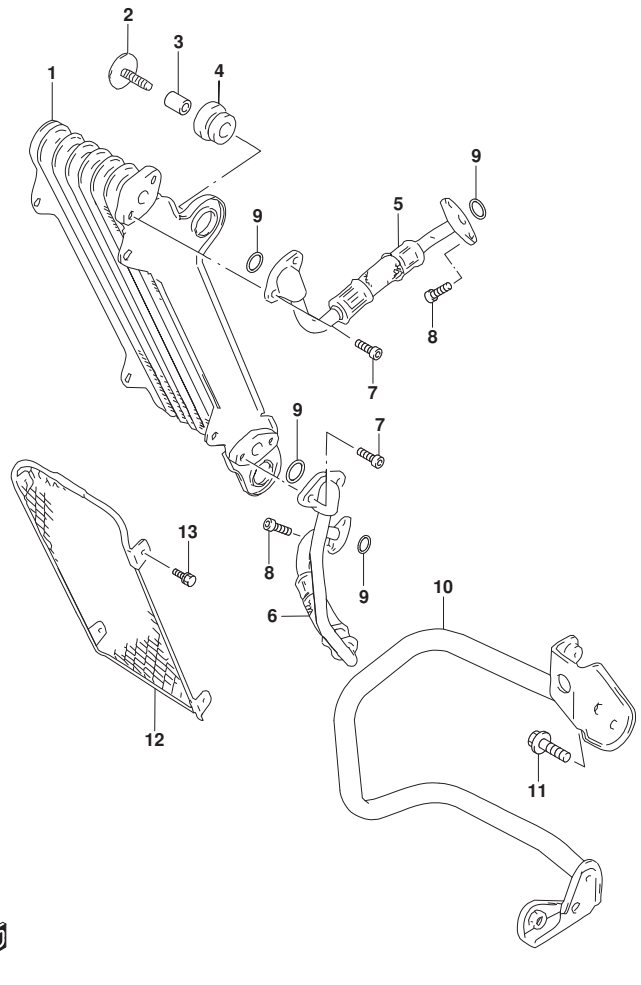

FIG.178A (1-C-3) OIL COOLER

REF NO.	PART NO.	DESCRIPTION	Q'TY	REMARKS
1	16600-32E00	COOLER ASSY,OIL	1	
2	09116-08120	BOLT (8X28)	2	
3	09180-08193	SPACER (8.5X12X17)	2	
4	16629-12D00	CUSHION,OIL COOLER	2	
5	16460-32E00	HOSE,OIL COOLER,UPPER	1	
6	16470-32E00	HOSE,OIL COOLER LOWER	1	
7	07130-0616A	BOLT	4	
8	01547-0616A	BOLT	4	
9	09280-12012	O-RING (D:2.4,ID:11.8)	4	
10	16640-32E11	GUARD,OIL COOLER	1	
11	01550-0820A	BOLT	1	
12	16650-32E00	BUMPER,OIL COOLER	1	
13	02162-0510B	SCREW	4	

FIG.201A

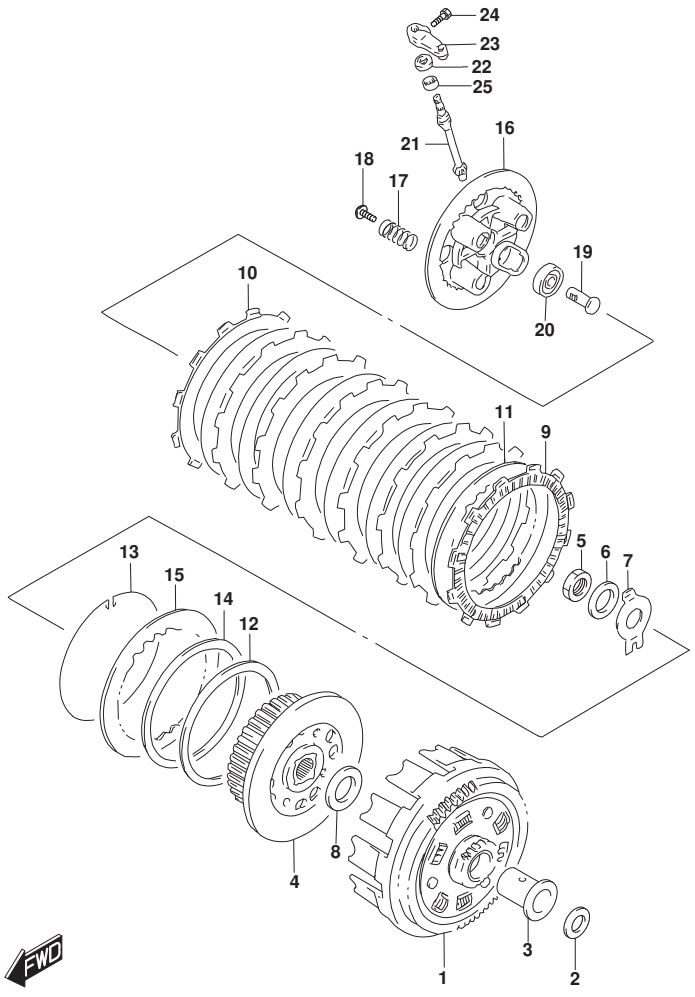

FIG.201A (1-C-4) CLUTCH

REF NO.	PART NO.	DESCRIPTION	Q'TY	REMARKS
1	21200-44B21	GEAR ASSY,PRIMARY DRIVEN (NT:6 1/20)	1	
2	09160-22032	WASHER (22X32X3)	1	
3	21251-32E00	SPACER,PRIMARY DRIVEN GEAR	1	
4	21410-44B00	HUB,CLUTCH SLEEVE	1	
5	09140-20001	NUT	1	
6	09164-20002	WASHER	1	
7	09169-20005	WASHER (20.2X44X1(13))	1	
8	09160-22068	WASHER (22X44X2)	1	
9	21441-31D00	PLATE,CLUTCH DRIVE (T:3)	7	
10	21441-44B01	PLATE,CLUTCH DRIVE (T:3)	1	
11	21451-44B00	PLATE,CLUTCH DRIVEN,NO.1 (T:1.6)	7	
12	21471-49100	SEAT, WAVE WASHER	1	
13	21481-45100	RING, WAVE WASHER STOPPER	1	
14	09164-00003	WASHER (117X132.5X1.20)	1	
15	21451-49200	PLATE, DRIVEN NO.2 (T:2)	1	
16	21462-31D00	DISK,CLUTCH PRESSURE	1	
17	09440-20016	SPRING	4	
18	09116-06168	BOLT (6X16)	4	
19	23165-31D00	RACK,CLUTCH RELEASE	1	
20	08150-62007	BEARING	1	
21	23261-32E00	PINION,CLUTCH RELEASE	1	
22	09285-10004	OIL SEAL (10X17X5)	1	
23	23271-31D00	ARM,CLUTCH RELEASE	1	
24	01500-0616A	BOLT	1	
25	09263-12024	BEARING (12X16X10)	1	

FIG.206A

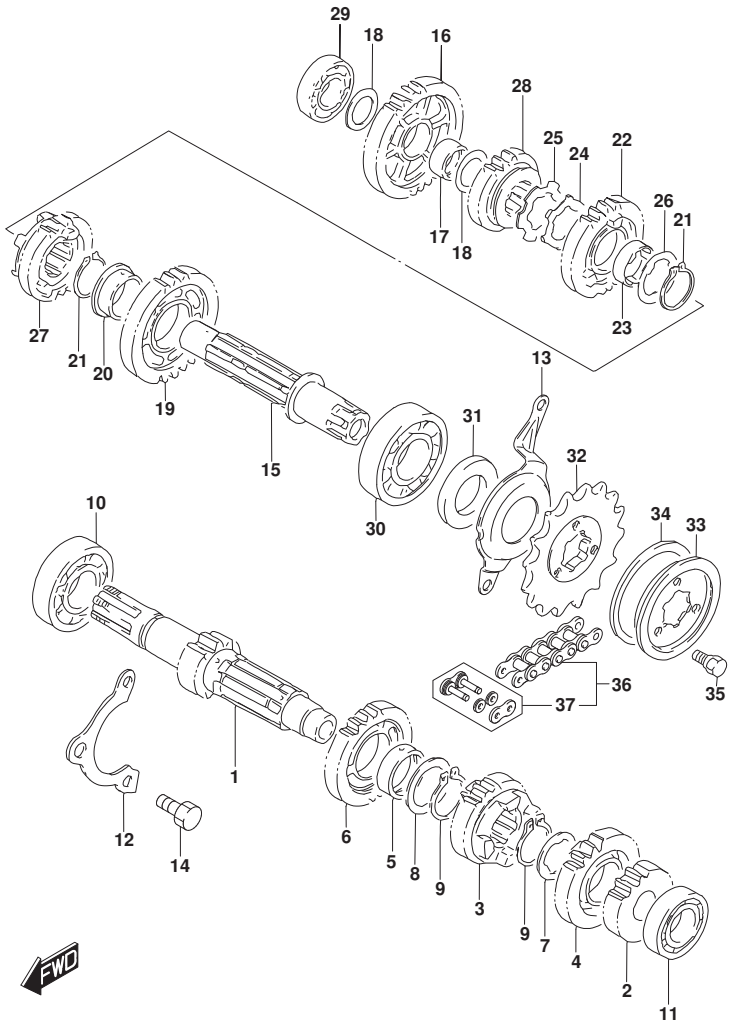

FIG.206A (1-C-5) TRANSMISSION

REF NO.	PART NO.	DESCRIPTION	Q'TY	REMARKS
1	24120-14810	SHAFT SET,CNTR (NT:12)	1	
2	24221-14A10	GEAR,2ND DRIVE (NT:16)	1	
3	24231-12D21	GEAR,3RD DRIVE (NT:21)	1	
4	24241-14A10	GEAR,4TH DRIVE (NT:21)	1	
5	24252-19F00	BUSH	1	
6	24251-14A10	GEAR,5TH DRIVE (NT:23)	1	
7	09167-25012	WASHER,LOCK (25.1X31X1.0)	1	
8	09181-25167	SHIM (25X34X1)	1	
9	09380-25003	SNAP RING	1	
10	09262-22028	BEARING (22X56X16)	1	
11	09262-17046	BEARING (17X40X12)	1	
12	24741-14A00	RETAINER,CNTR SHAFT BRG	1	
13	24751-32E00	RETAINER,DRIVE SHAFT OIL SEAL	1	
14	01500-0816A	BOLT	3	
15	24130-14A10	SHAFT,DRIVE	1	
16	24311-14A01	GEAR,1ST DRIVEN (NT:29)	1	
17	09300-20032	BUSH (20X24X13)	1	
18	09181-20195	SHIM (20X30X1)	2	
19	24321-14A10	GEAR,2ND DRIVEN (NT:26)	1	
20	09301-25002	BUSH	1	
21	09380-25003	SNAP RING	1	
22	24331-14A20	GEAR,3RD DRIVEN (NT:26)	1	
23	24332-24510	BUSH,DRIVEN GEAR	1	
24	09169-25001	WASHER (25.1X37X2.5)	1	
25	09167-25013	WASHER,LOCK (25.1X41X1.5)	1	
26	09167-25016	WASHER,LOCK (25.5X35X1)	1	
27	24341-14A10	GEAR,4TH DRIVEN (NT:21)	1	
28	24351-14A10	GEAR,5TH DRIVEN (NT:19)	1	
29	09262-20059	BEARING (20X42X12)	1	
30	09262-25125	BEARING (25X62X17)	1	
31	09283-25108	OIL SEAL (25X44X7)	1	
32	27511-31D00	SPROCKET,ENGINE (NT:15)	1	
33	27512-44B00	PLATE,ENGINE SPROCKET	1	
34	27517-37400	DAMPER	1	
35	09111-06039	BOLT (6X13)	3	

FIG.206A

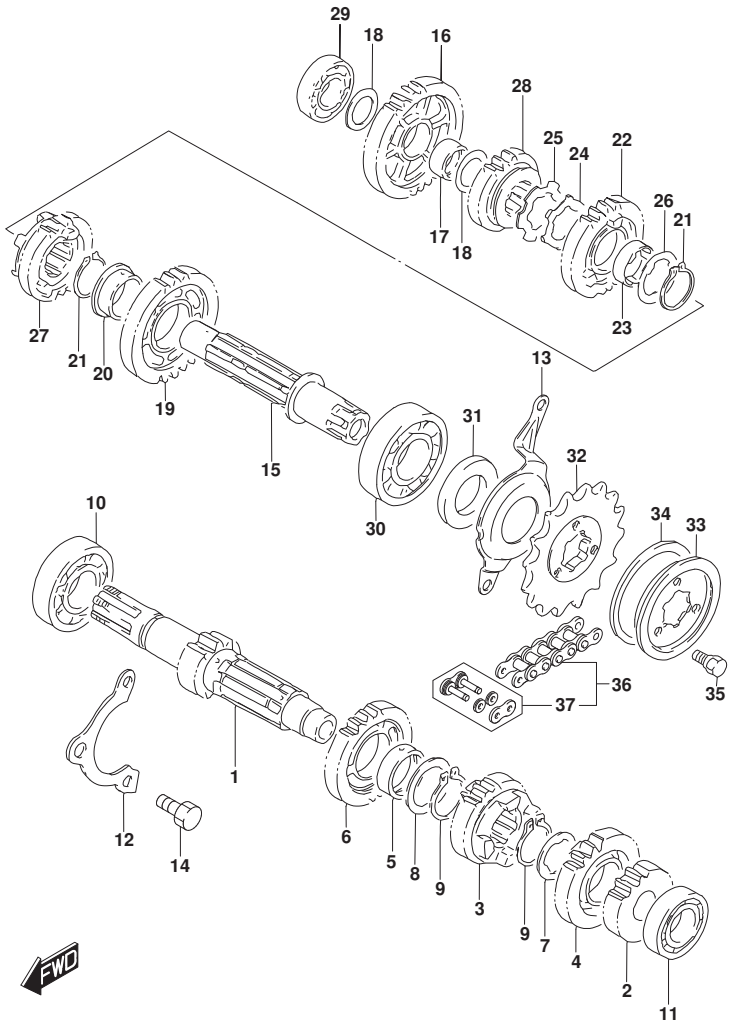

FIG.206A (1-C-6) TRANSMISSION

REF NO.	PART NO.	DESCRIPTION	Q'TY	REMARKS
36	27600-32C90-110	CHAIN, DRIVE	1	
37	27620-32C90	.JOINT SET, CHAIN	1	

FIG.212A

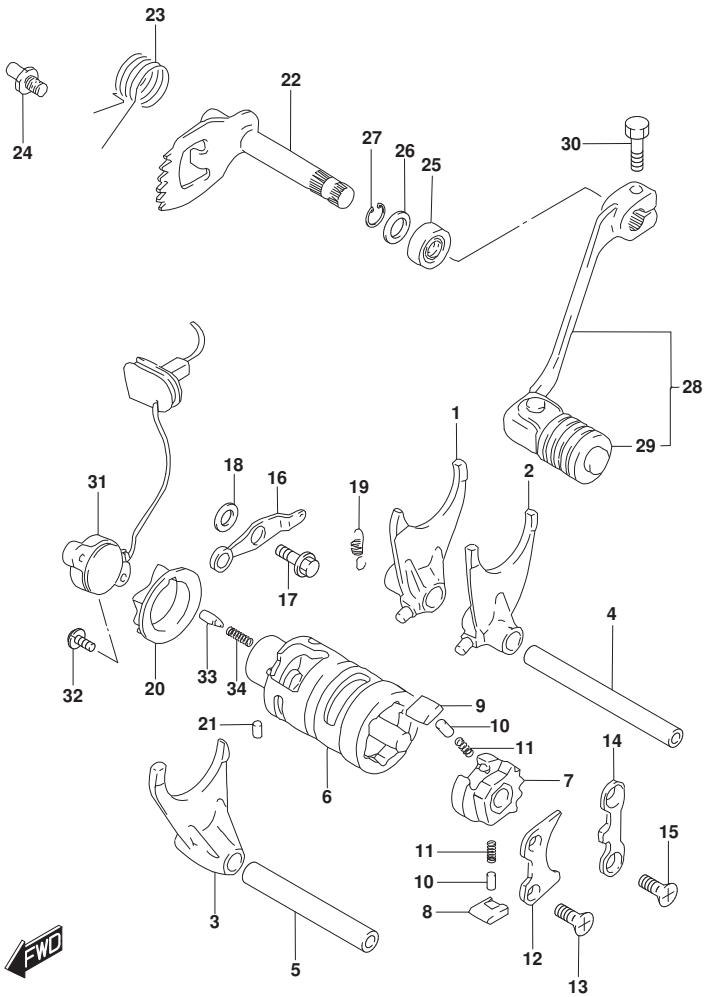

FIG.212A (1-C-7) GEAR SHIFTING

REF NO.	PART NO.	DESCRIPTION	Q'TY	REMARKS
1	25211-37401	FORK,GEAR SHIFT NO,1	1	
2	25221-37401	FORK,GEAR SHIFT,NO,2	1	
3	25231-14A01	FORK,GEAR SHIFT,NO.3	1	
4	25411-20A11	SHAFT,GEAR SHIFT FORK (L:95)	1	
5	25421-14A02	SHAFT,GEAR SHIFT FORK (L:75)	1	
6	25310-37400	CAM, GEAR SHIFTING	1	
7	25322-31310	GEAR,GEAR SHIFT CAM DRIVEN (NT :13)	1	
8	25323-34201	PAWL,GEAR SHIFT,NO.1	1	
9	25324-34201	PAWL,GEAR SHIFT,NO.2	1	
10	09261-05003	PIN (5X8)	2	
11	09440-04003	SPRING	2	
12	25331-14A00	LIFTER,GEAR SHIFT POLE	1	
13	09126-06011	SCREW (6X12)	2	
14	25341-40001	GUIDE, CAM	1	
15	09126-06011	SCREW (6X12)	2	
16	25350-37400	STOPPER	1	
17	09111-06054	BOLT (6X14.6)	1	
18	08211-06141	WASHER	1	
19	09443-08020	SPRING	1	
20	25381-37401	PLATE,GEAR SHIFT CAM STOPPER	1	
21	04221-04069	PIN	1	
22	25510-32E00	SHAFT,GEAR SHIFT	1	
23	09444-26023	SPRING	1	
24	25671-01011	STOPPER,GEAR SHIFT ARM	1	
25	09285-10004	OIL SEAL (10X17X5)	1	
26	08212-12201	WASHER	1	
27	08331-3112A	CIRCLIP	1	
28	25600-32E00	LEVER ASSY,GEAR SHIFT	1	
29	25652-03D00	.RUBBER,GEAR SHIFT PEDAL	1	
30	01500-0620A	BOLT	1	
31	37720-32E00	BASE ASSY,GEAR SHIFT TERM	1	
32	09106-05023	BOLT (5X16)	2	
33	09209-05011	PIN (5X15.5)	1	
34	09440-04010	SPRING	1	

FIG.301A

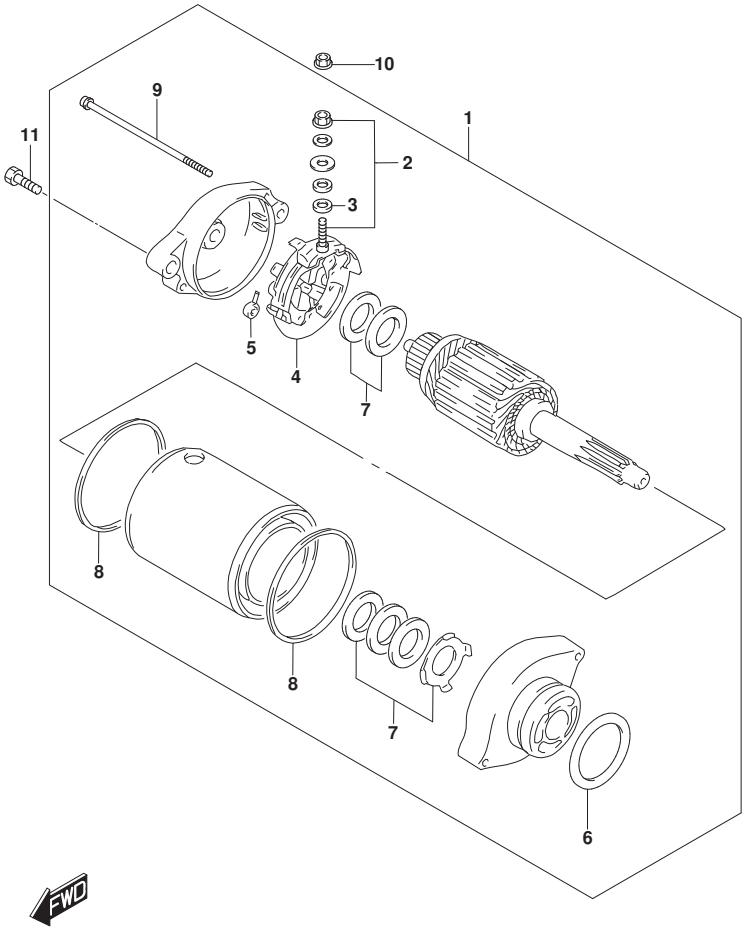

FIG.301A (1-C-8) STARTING MOTOR

REF NO.	PART NO.	DESCRIPTION	Q'TY	REMARKS
1	31100-32E01	MOTOR ASSY,STARTING	1	
2	31130-38B00	.TERMINAL SET,BRUSH	1	
3	31143-49040	.O-RING	1	
4	31132-38B00	.HOLDER SET,BRUSH	1	
5	31135-38B00	.SPRING,BRUSH	4	
6	31156-48B00	.O RING (D:2.1,ID;34.7)	1	
7	31170-32E00	.WASHER SET	1	
8	31264-31300	.O RING	2	
9	31280-26D00	.BOLT	2	
10	08361-3506A	NUT	1	
11	01547-0630A	BOLT	2	

FIG.303A (1-C-9) MAGNETO

REF NO.	PART NO.	DESCRIPTION	Q'TY	REMARKS
1	32101-32E01	STATOR ASSY	1	
2	32102-32E00	ROTOR ASSY	1	
3	07130-0510A	BOLT	2	
4	09103-14001	BOLT (14X43)	1	
5	07130-0630A	BOLT	3	
6	09420-05007	KEY	1	
7	32371-32E00	CLAMP,MAGNETO LEAD	1	

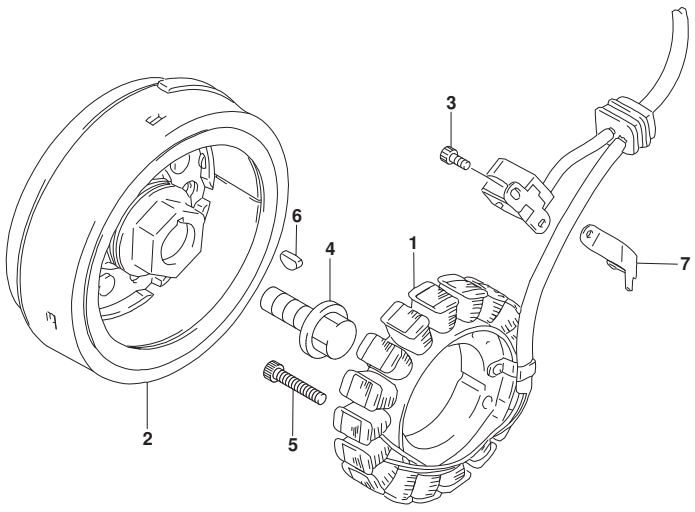

FIG.310A

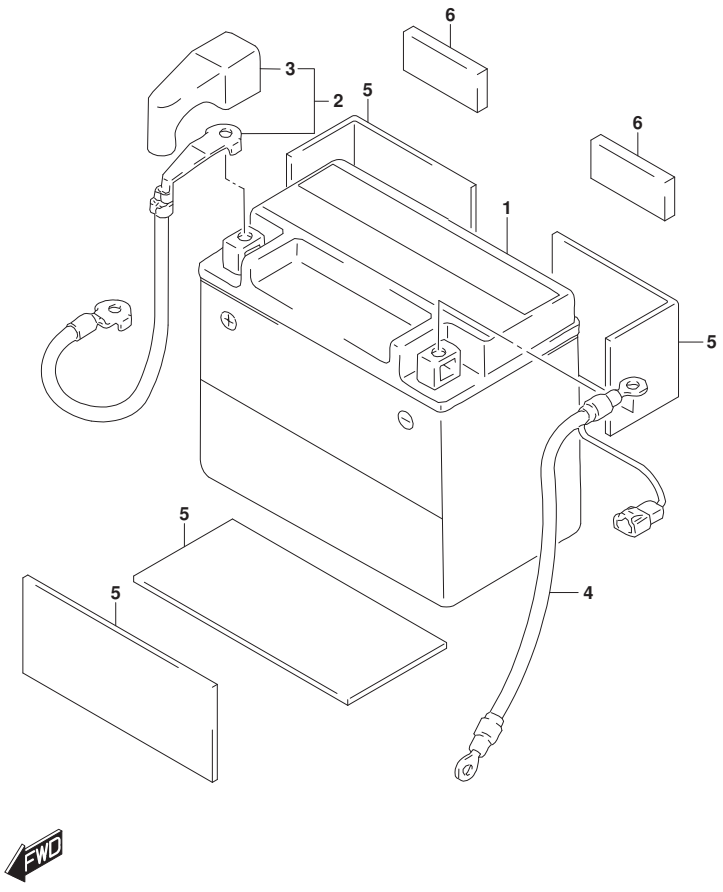

FIG.310A (1-C-10) BATTERY

REF NO.	PART NO.	DESCRIPTION	Q'TY	REMARKS
1	33630-32C00	BATTERY (YTX9-BS,12V,8AH)	1	
2	33820-32E00	WIRE,BATTERY PLUS	1	
3	33624-32E00	.CAP,BATTERY PLUS TERMINAL	1	
4	33860-32E00	WIRE,BATTERY MINUS	1	
5	33651-37000	PROTECTOR (170X95X3.0)	4	CUT AS REQUIRED
6	33652-08420	PROTECTOR (70X100X6)	2	CUT AS REQUIRED

FIG.312A

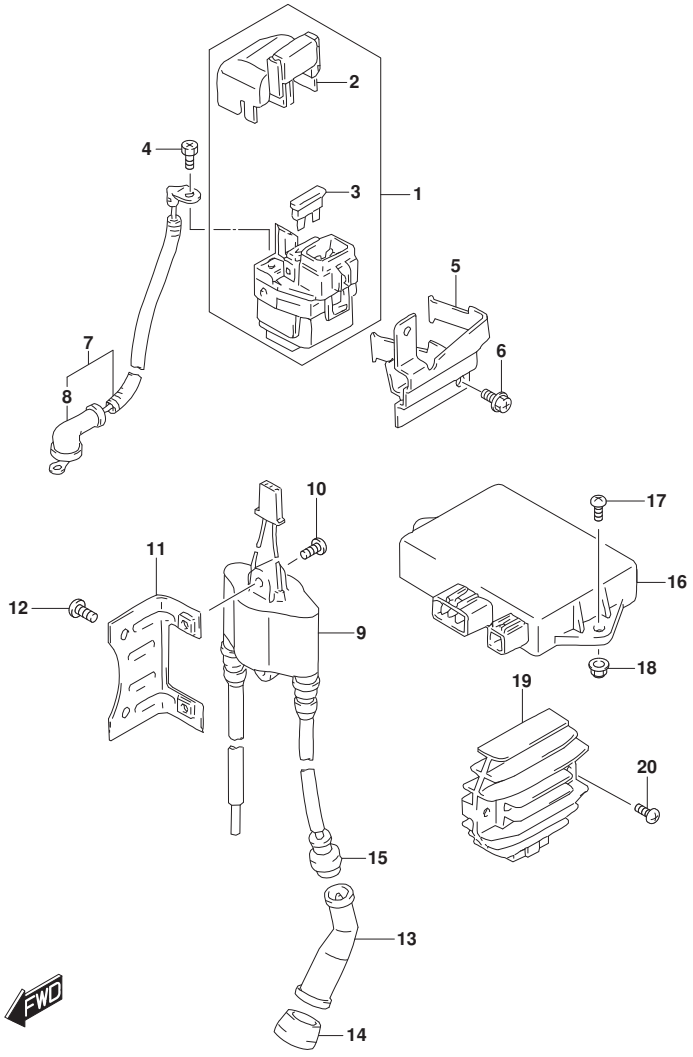

FIG.312A (1-C-11) ELECTRICAL

REF NO.	PART NO.	DESCRIPTION	Q'TY	REMARKS
1	31800-26E00	RELAY ASSY,STARTING MOTOR	1	
2	31861-26E00	.COVER,STARTER RELAY	1	
3	09481-30101	.FUSE (30A)	2	
4	09128-06013	SCREW (6X8)	2	
5	31890-32E00	BRACKET,STG MOT RLY	1	
6	02162-0608A	SCREW	2	
7	33810-32E00	WIRE,STARTER MOTOR	1	
8	31861-48B10	.CAP,STARTER MOTOR LEAD	1	
9	33410-32E00	COIL ASSY,IGNITION	1	
10	02142-0625A	SCREW	2	
11	33416-32E00	BRACKET,IGNITION COIL	1	
12	02142-0610A	SCREW	2	
13	33510-43010	CAP,SPARK PLUG	2	
14	33541-47D00	SEAL,SPARK PLUG	2	
15	33542-38B00	SEAL,HIGH TENSION CORD (SIDE)	2	
16	32900-32E10	CDI UNIT	1	
17	02162-0620C	SCREW	2	
18	08319-3106A	NUT	2	
19	32800-32E00	RECTIFIER ASSY	1	
20	02162-0620C	SCREW	2	

FIG.330A

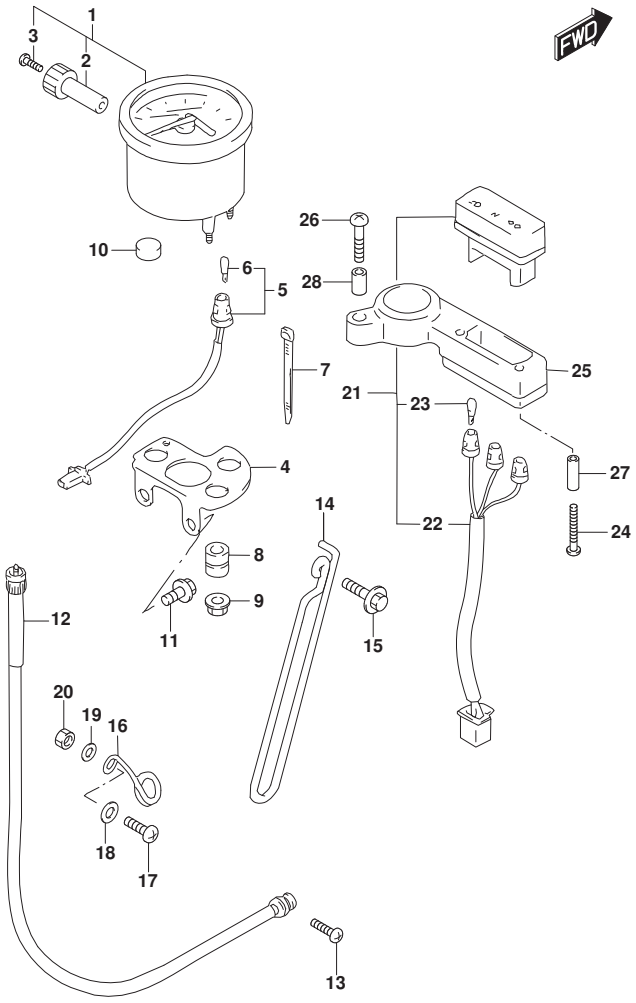

FIG.330A (1-C-12) SPEEDOMETER

REF NO.	PART NO.	DESCRIPTION	Q'TY	REMARKS
1	34120-32E20	SPEEDOMETER (KILO)	1	
2	34124-44B30	.KNOB,TRIP	1	
3	34184-12D00	.SCREW,TRIP KNOB	1	
4	34950-32E10	BRACKET,METER	1	
5	34170-15D21	SOCKET	1	
6	#09471-12108	.BULB (12V1.7W)	1	
7	34954-42A90	CLAMP	1	
8	34189-30921	CUSHION	3	
9	09159-06076	NUT (M6)	3	
10	34167-42A90	CUSHION	2	
11	01550-0612A	BOLT	2	
12	34910-32E00	CABLE ASSY,SPEEDOMETER	1	
13	02112-0516B	SCREW	1	
14	34938-14D21	GUIDE,SPEEDOMETER CABLE	1	
15	09116-06167	BOLT (6X20)	1	
16	34938-14D30	GUIDE,METER CABLE NO.2	1	
17	02142-0616B	SCREW	1	
18	09160-06109	WASHER (6.5X18X1.6)	1	
19	09169-06053	WASHER	1	
20	08310-0006B	NUT	1	
21	36380-32E10	BOX ASSY,PILOT LAMP	1	
22	36394-32E00	.SOCKET & CORD	1	
23	09471-12118	.BULB (13.5V2W)	3	
24	03511-1435B	SCREW	2	
25	36382-32E00	HOLDER,PILOT BOX	1	
26	09139-06029	SCREW (6X25)	1	
27	09180-04024	SPACER (4.5X6.5X25)	2	
28	09180-06251	SPACER (6.1X8X15.5)	1	

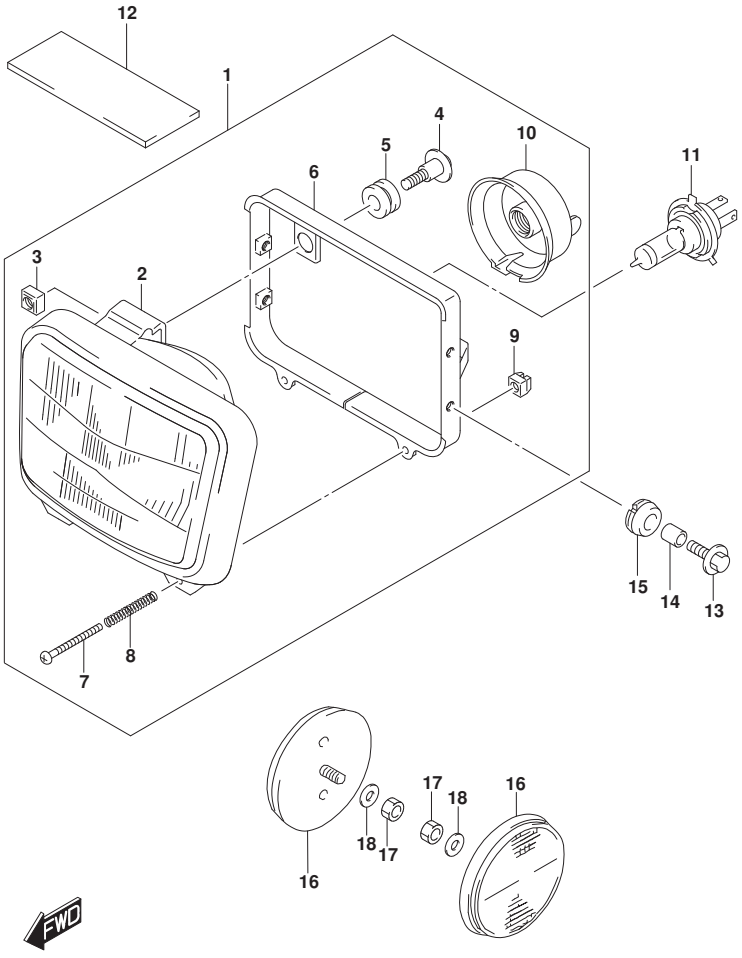

FIG.333A (1-C-13) HEADLAMP

REF NO.	PART NO.	DESCRIPTION	Q'TY	REMARKS
1	35100-12ED0-999	HEADLAMP ASSY	1	
2	35121-12EA0	.UNIT ASSY	1	
3	35135-12E20	.NUT,ADJUSTING	2	
4	35135-45900	.NUT	1	
5	35136-38A00	.SCREW,MOUNTING	1	
6	35139-45230	.CUSHION	1	
7	35141-12ED0	.HOUSING	1	
8	35151-12EA0	.SCREW,ADJUSTING	2	
9	35154-12EA0	.SPRING,ADJUSTING	2	
10	35173-01440	.COVER,SOCKET	1	
11	#09471-12185	BULB (12V60/55W,H4)	1	
12	36920-44A01	CUSHION,HEADLAMP	2	
13	09116-06167	BOLT (6X20)	4	
14	09180-06310	SPACER (6.5X10X10)	4	
15	09320-09018	CUSHION	4	
16	35950-14A11	REFLEX REFLECTOR ASSY,FR SIDE	2	
17	08313-1005B	NUT	2	
18	08321-0105B	WASHER,LOCK	2	

FIG.334A

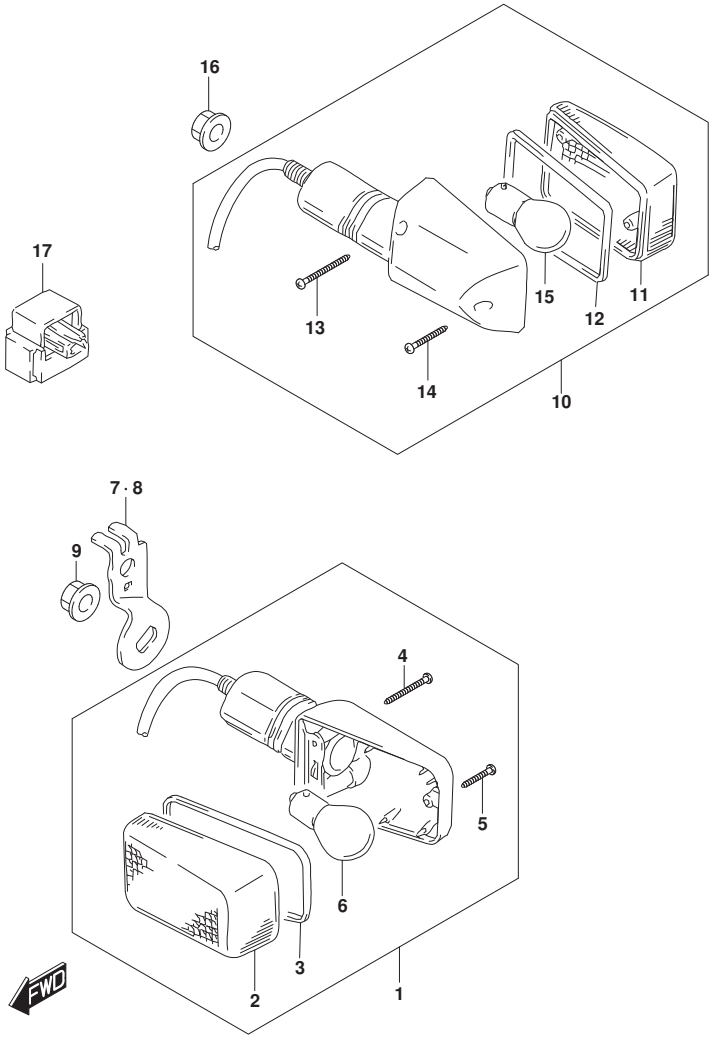

FIG.334A (1-C-14) TURNSIGNAL LAMP

REF NO.	PART NO.	DESCRIPTION	Q'TY	REMARKS
1	35601-29E30	LAMP ASSY,FRONT TURNSIGNAL	2	
2	35612-17C20	.LENS	2	
3	35613-27A00	.GASKET	2	
4	35623-27A00	.SCREW (3X30)	4	
5	35725-40511	.SCREW (3X20)	2	
6	09471-12045	.BULB (12V21W)	2	
7	35671-32E00	BRACKET,FRONT RH	1	
8	35681-32E00	BRACKET,FRONT LH	1	
9	08316-1010A	NUT	2	
10	35603-29E90	LAMP ASSY,REAR TURNSIGNAL	2	
11	35652-17C20	.LENS	2	
12	35613-27A00	.GASKET	2	
13	35623-27A00	.SCREW (3X30)	4	
14	35725-40511	.SCREW (3X20)	2	
15	09471-12045	.BULB (12V21W)	2	
16	08316-1010A	NUT	2	
17	38610-26E01	RELAY ASSY	1	

FIG.339A

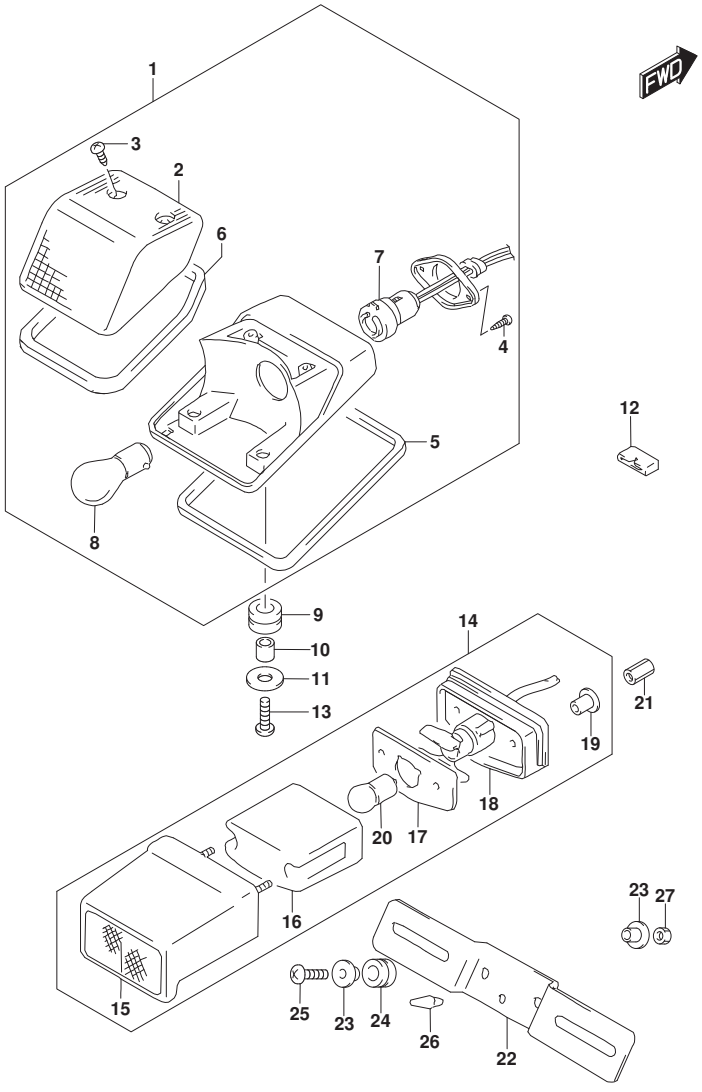

FIG.339A (1-C-15) REAR COMBINATION LAMP

REF NO.	PART NO.	DESCRIPTION	Q'TY	REMARKS
1	35710-32E01	LAMP ASSY, TAIL	1	
2	35712-13E00	.LENS	1	
3	03211-0412A	.SCREW	2	
4	03211-0412B	.SCREW	2	
5	35713-13E00	.GASKET	1	
6	35713-32E00	.GASKET	1	
7	35718-32E01	.SOCKET & CORD	1	
8	09471-12083	.BULB (12V21/5W)	1	
9	09320-09016	CUSHION (9X18X9.5)	2	
10	09180-06267	SPACER (6.5X9X12.5)	2	
11	09160-06088	WASHER (6.5X20X1.6)	2	
12	09329-02002	CUSHION	1	
13	02112-0620A	SCREW	2	
14	35910-32E00	LAMP ASSY,LICENSE	1	
15	35917-17C10	.COVER,LENS	1	
16	35912-38A20	.LENS	1	
17	35913-38A30	.GASKET	1	
18	35761-24B31	.CUSHION	1	
19	35766-24B30	.SPACER	2	
20	09471-12140	.BULB (12V5W)	1	
21	09140-04006	NUT	2	
22	35927-00A10	BRACKET,LICENSE PLATE	1	
23	09169-06073	WASHER (6.1X17.0X4.8)	4	
24	09320-09016	CUSHION (9X18X9.5)	2	
25	02142-0620A	SCREW	2	
26	09321-06030	CUSHION	1	
27	08310-0006A	NUT	2	

DR650SEM1_E24_339A
REARCOMBINATION LAMP

FIG.350A

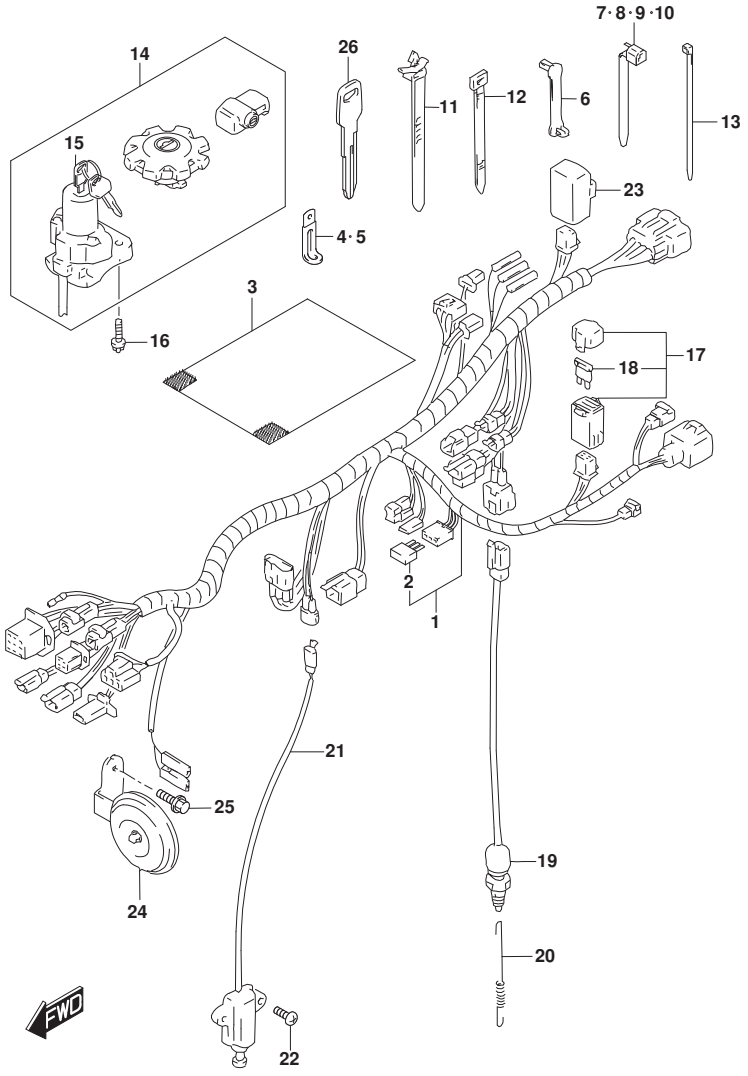

FIG.350A (1-C-16) WIRING HARNESS

REF NO.	PART NO.	DESCRIPTION	Q'TY	REMARKS
1	36610-32E30	HARNESS,WIRING	1	
2	36611-38A10	.DIODE	1	
3	36618-15D21	COVER,WIRING HARNESS	1	
4	09404-08422	CLAMP,WIRING HARNESS (L:80)	1	
5	09404-06429	CLAMP (L:45)	2	
6	09407-03401	CLAMP (L:33)	5	
7	09407-11401	CLAMP (L:95)	3	
8	09407-14403	CLAMP (L:125)	4	
9	09407-18402	CLAMP (L:165)	5	
10	09407-25401	CLAMP (L:235)	1	
11	09407-11402	CLAMP (L:90)	1	
12	09407-12402	CLAMP (L:120)	2	
13	09407-10404	CLAMP (L:100)	1	
14	37000-04832	LOCK SET	1	
15	37100-04F10	.LOCK ASSY,STEERING	1	
16	09139-08016	BOLT (8X20)	2	
17	36740-32E00	BOX ASSY,FUSE	1	
18	09481-10101	.FUSE (10A)	2	
19	37740-32E00	SWITCH ASSY,STOP LAMP	1	
20	09443-06016	SPRING	1	
21	37840-44X50	SWITCH ASSY,SIDE STAND	1	
22	02112-0616B	SCREW	2	
23	38740-24X50	RELAY ASSY	1	
24	38500-32E00	HORN ASSY	1	
25	01550-0612A	BOLT	1	
26	37146-33E00	KEY,BLANK	1	OPT

FIG.355A

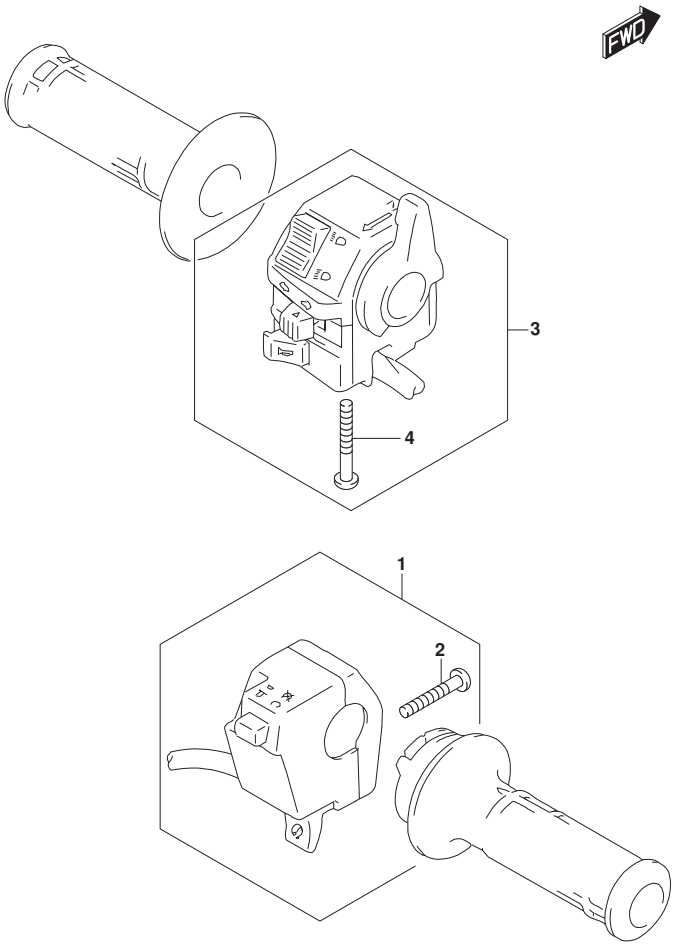

FIG.355A (1-D-2) HANDLE SWITCH

REF NO.	PART NO.	DESCRIPTION	Q'TY	REMARKS
1	37200-32E31	SWITCH ASSY,HANDLE RH	1	
2	09125-05066	.SCREW (5X25)	2	
3	37400-32E00	SWITCH ASSY,HANDLE LH	1	
4	02112-0545B	.SCREW	2	

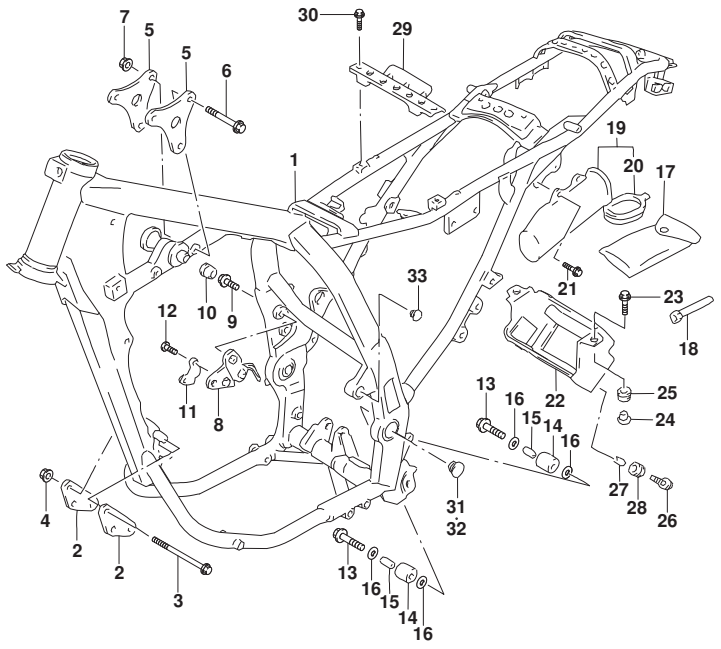

FIG.401A (1-D-3) FRAME

REF NO.	PART NO.	DESCRIPTION	Q'TY	REMARKS
1	41100-32E50-YPT	FRAME (GLAY)	1	
2	09159-06043	.NUT	3	
3	41911-32E00	PLATE,ENG MTG,FRONT	2	
4	09103-08139	BOLT (8X100)	2	
5	08319-3108A	NUT	2	
6	41991-32E00	PLATE,ENG MTG,UPPER	2	
7	09103-08339	BOLT (8X55)	2	
8	08319-3108A	NUT	2	
9	41930-32E00-019	PLATE,ENG MTG,REAR RH (BLACK)	1	
10	01550-0820A	BOLT	2	
11	09250-20012	PLUG (OD:22)	2	
12	43251-32E00	BRACKET,STOP SWITCH	1	
13	02162-0616B	SCREW	1	
14	09103-08178	BOLT (8X38)	2	
15	43911-13E00	ROLLER,CHAIN CONTROL,UPPER	2	
16	09180-08215	SPACER (8.6X12.2X26.5)	2	
17	08211-08201	WASHER	4	
18	09800-21084	TOOL ASSY	1	
19	09816-00100	SPANNER,BOX (16)	1	
20	41550-32E00	HOLDER,TOOL	1	
21	41552-37210	.CAP, TOOL HOLDER	1	
22	09116-06006	BOLT (6X16)	2	
23	41540-32E00	HOLDER,BATTERY	1	
24	09116-06167	BOLT (6X20)	2	
25	09169-06065	WASHER (8.5X20X8)	2	
26	09320-08021	CUSHION (8.5X20X8)	3	
27	09116-06213	BOLT (6X16)	1	
28	09180-06038	SPACER (6.1X9X7.5)	1	
29	41561-32E00	PLATE,BATTERY FITTING	1	
30	01550-0610B	BOLT	2	
31	43585-32E00	PLUG,FRAME PIVOR RH	1	
32	43595-32E00	PLUG,FRAME PIVOR LH	1	
33	43586-32E00	PLUG,,FRAME BOSS	1	

FIG.407A

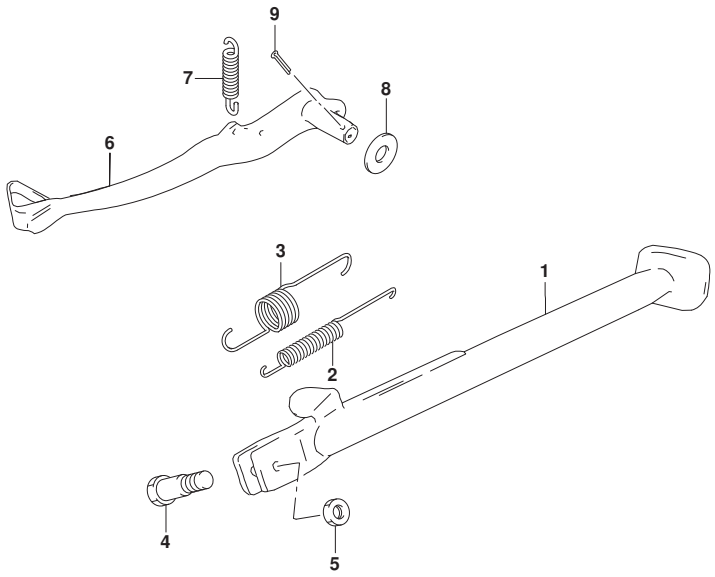

FIG.407A (1-D-4) STAND

REF NO.	PART NO.	DESCRIPTION	Q'TY	REMARKS
1	42310-32E20	STAND,PROP	1	
2	09443-12045	SPRING	1	
3	09443-19010	SPRING	1	
4	09111-10047	BOLT (10X30)	1	
5	09159-10097	NUT	1	
6	43110-32E00	PEDAL,BRAKE	1	
7	09443-11030	SPRING	1	
8	09160-15049	WASHER (15.5X24X2.3)	1	
9	04111-3025A	PIN	1	

FIG.415A

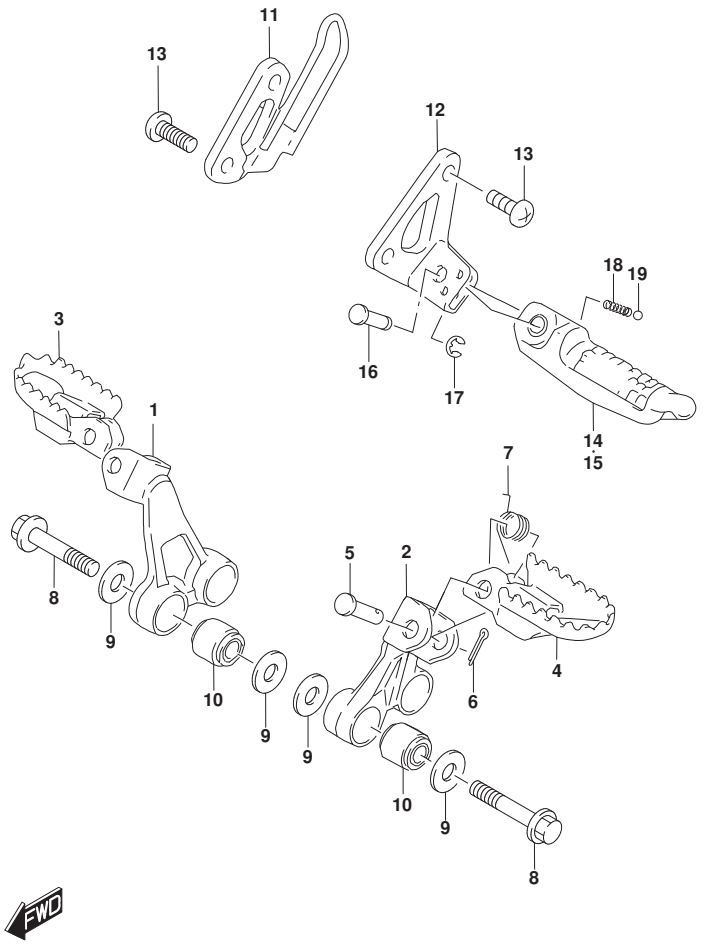

FIG.415A (1-D-5) FOOTREST

REF NO.	PART NO.	DESCRIPTION	Q'TY	REMARKS
1	43510-32E00	BRACKET,FRONT FOOTREST RH	1	
2	43520-32E00	BRACKET,FRONT FOOTREST LH	1	
3	43550-03B00-019	FOOTREST,FR RH (BLACK)	1	
4	43560-03B00-019	FOOTREST,FR LH (BLACK)	1	
5	09200-10013	PIN	2	
6	04111-2020A	PIN	2	
7	09448-15004	SPRING	2	
8	09103-10232	BOLT (10X50)	4	
9	09160-10124	WASHER (10.1X23X2.3)	4	
10	09319-10033	BUSH (10.2X25X19)	4	
11	43650-32E00-019	BRACKET,PILLION FOOT RH (BLACK)	1	
12	43750-32E00-019	BRACKET,PILLION FOOT LH (BLACK)	1	
13	09106-08161	BOLT (8X20)	4	
14	43610-23E00	BAR,PILLION FOOTREST RH	1	
15	43710-23E00	BAR,PILLION FOOTREST LH	1	
16	09208-08011	PIN	2	
17	08332-1106B	E RING	2	
18	09440-05005	SPRING	2	
19	06111-07004	BALL	2	

FIG.416A

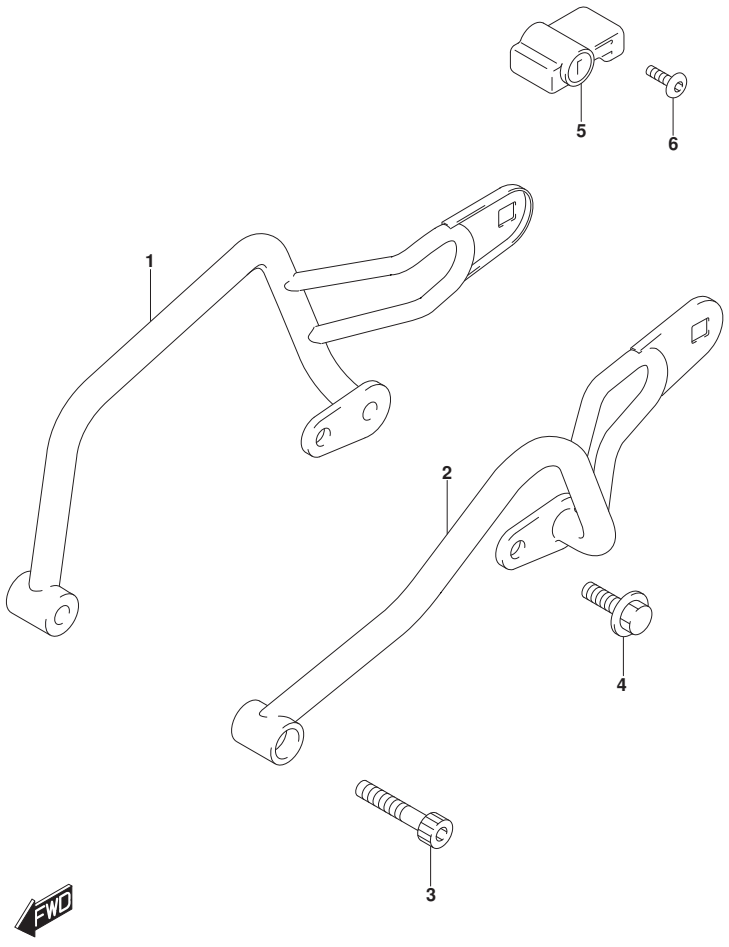

FIG.416A (1-D-6) REAR GRIP

REF NO.	PART NO.	DESCRIPTION	Q'TY	REMARKS
1	43970-32E10-YPT	GRIP,RR RH (GLAY)	1	
2	43980-32E10-YPT	GRIP,RR LH (GLAY)	1	
3	07130-0825A	BOLT	2	
4	01550-0816A	BOLT	2	
5	95700-41821	LOCK SET,HELMET	1	
6	09139-06089	SCREW (6X14)	1	

FIG.420A

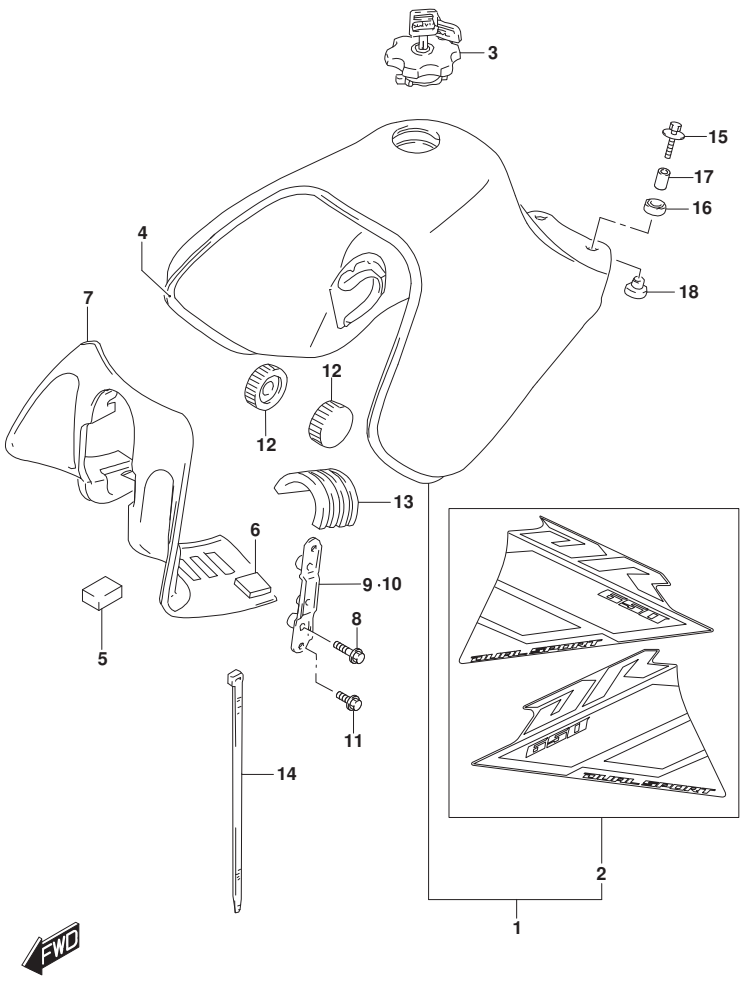

FIG.420A (1-D-7) FUEL TANK

REF NO.	PART NO.	DESCRIPTION	Q'TY	REMARKS
1-1	49100-32E60-019	TANK ASSY,FUEL (BLACK)	1	BODY COLOR:019
1-2	49100-32E60-30H	TANK ASSY,FUEL (WHITE)	1	BODY COLOR:30H
2-1	68110-32EG0-B7R	.TAPE SET,FUEL TANK	1	BODY COLOR:019
2-2	68110-32EG0-B7T	.TAPE SET,FUEL TANK	1	BODY COLOR:30H
3	44200-13831	CAP SET,FUEL TANK FILLER	1	
4	68241-32E00	MOLDING,FUEL TANK	1	
5	63411-35B00	CUSHION (20X40X10)	2	
6	44613-13600	CUSHION (25X35X7)	2	
7	44271-32E00	COVER,FUEL TANK,FRONT	1	
8	09116-06210	BOLT (6X12)	4	
9	44280-32E10	BRACKET, FRONT COVER RH	1	
10	44290-32E10	BRACKET, FRONT COVER LH	1	
11	01550-0625A	BOLT	4	
12	44511-12D00	CUSHION,FUEL TANK,FRONT	2	
13	44541-13E00	CUSHION,FUEL TANK,UPPER	1	
14	09407-25402	CLAMP (L:248)	1	
15	09116-06214	BOLT (6X30)	2	
16	09320-14022	CUSHION (14.5X24X8)	2	
17	09180-06271	SPACER (6.5X9X18)	2	
18	09320-10071	CUSHION (9X24X18)	2	

FIG.421A (1-D-8) FUEL COCK

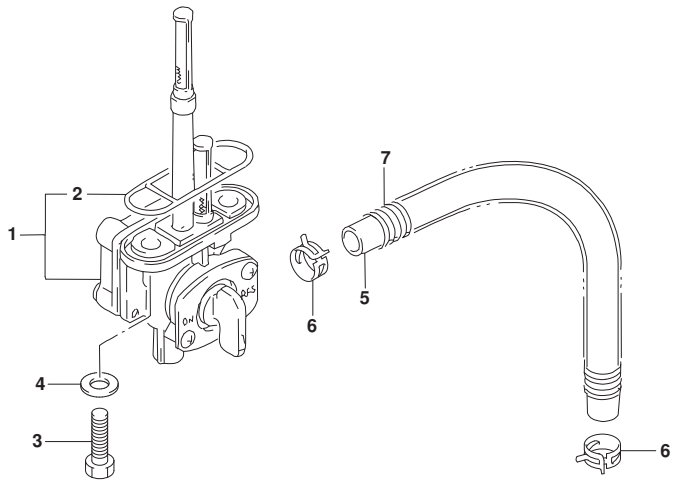

REF NO.	PART NO.	DESCRIPTION	Q'TY	REMARKS
1	44300-32E01	COCK ASSY,FUEL	1	
2	44348-87421	.GASKET,JOINT	1	
3	09128-06006	BOLT (6X20)	2	
4	09168-06026	GASKET (6.4X11.5X0.84)	2	
5	09343-07518	HOSE (7X11X160)	1	
6	09401-10409	CLIP (ID:10.5)	2	
7	09440-13041	SPRING	1	

FIG.445A

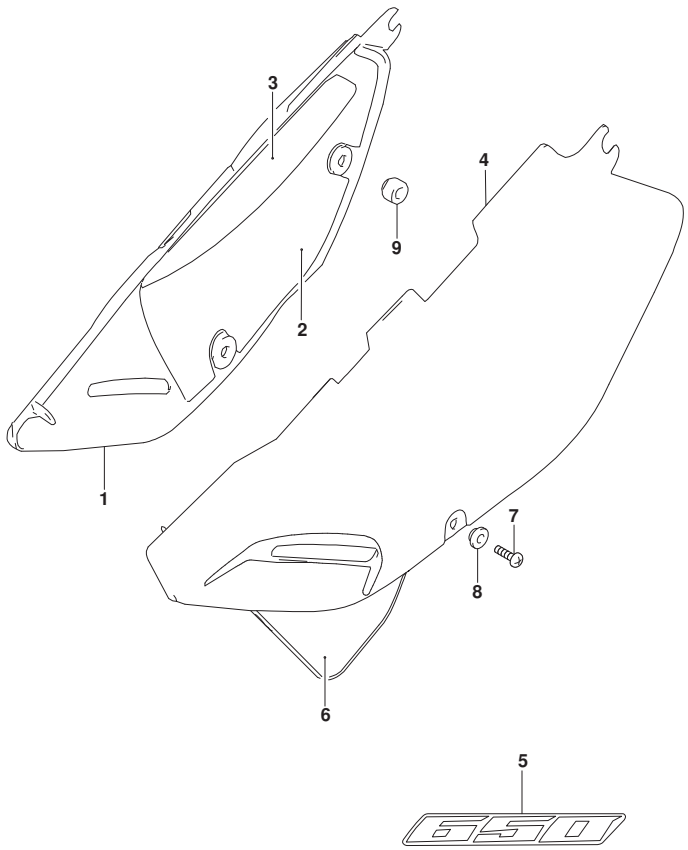

FIG.445A (1-D-9) FRAME COVER

REF NO.	PART NO.	DESCRIPTION	Q'TY	REMARKS
1-1	47111-32E10-019	COVER,FRAME RH (BLACK)	1	BODY COLOR:019
1-2	47111-32E10-30H	COVER,FRAME RH (WHITE)	1	BODY COLOR:30H
2	47166-32E00	SHIELD,FRAME COVER,R,NO.1	1	
3	47167-32E00	SHIELD,FRAME COVER,R,NO.2	1	
4-1	47211-32E10-019	COVER,FRAME LH (BLACK)	1	BODY COLOR:019
4-2	47211-32E10-30H	COVER,FRAME LH (WHITE)	1	BODY COLOR:30H
5-1	68135-32E80-J7A	EMBLEM,"650" (GRAYBLACK)	2	BODY COLOR:019
5-2	68135-32E80-8YM	EMBLEM,"650" (WHITE,BLACK)	2	BODY COLOR:30H
6	68146-32E00	TAPE LOWER	1	
7	02142-0616A	SCREW	2	
8	09169-06028	WASHER	2	
9	09321-10019	CUSHION	2	

FIG.451A

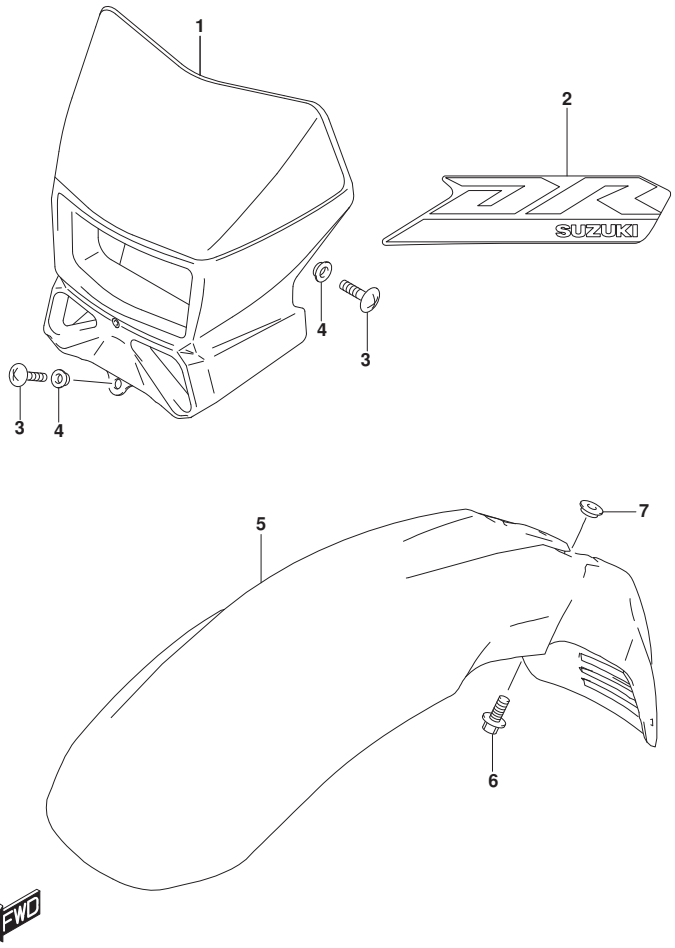

FIG.451A (1-D-10) HEADLAMP HOUSING

REF NO.	PART NO.	DESCRIPTION	Q'TY	REMARKS
1-1	51811-29F50-019	COVER,HEADLAMP (BLACK)	1	BODY COLOR:019
1-2	51811-29F50-30H	COVER,HEADLAMP (WHITE)	1	BODY COLOR:30H
2-1	68725-29FD0-B7S	TAPE,HEADLAMP COVER	1	BODY COLOR:019
2-2	68725-29FD0-B7U	TAPE,HEADLAMP COVER	1	BODY COLOR:30H
3	02142-0612A	SCREW	3	
4	09169-06032	WASHER	3	
5-1	53111-13E00-019	FENDER,FRONT (BLACK)	1	BODY COLOR:019
5-2	53111-13E00-30H	FENDER,FRONT (WHITE)	1	BODY COLOR:30H
6	09116-06170	BOLT (6X16)	4	
7	09169-06073	WASHER (6.1X17.0X4.8)	4	

FIG.462A

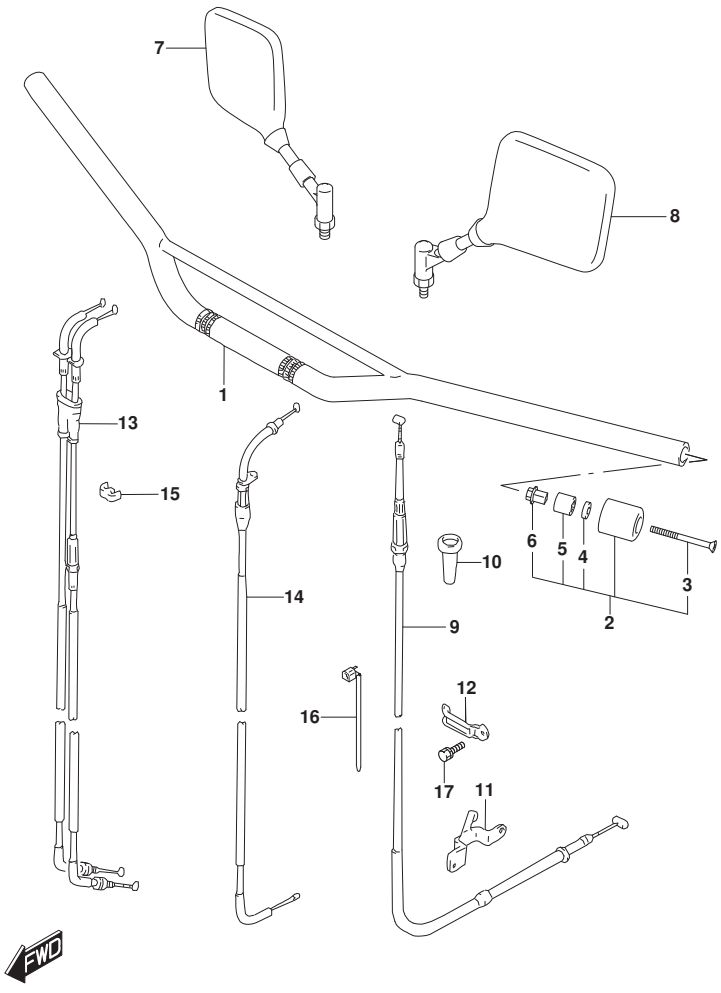

FIG.462A (1-D-11) HANDLEBAR

REF NO.	PART NO.	DESCRIPTION	Q'TY	REMARKS
1	56110-32E00-291	HANDLEBAR (BLACK)	1	
2	56200-29832	BALANCER SET,HANDLEBAR	2	
3	02122-0660B	.SCREW	2	
4	09160-06131	.WASHER (6.5X16X4)	2	
5	56272-10G20	.EXPANDER,HANDLE BALANCER	2	
6	56273-10G10	.NUT,HANDLE BALANCER	2	
7	56500-06G30	MIRROR ASSY,REAR VIEW RH	1	
8	56600-06G30	MIRROR ASSY,REAR VIEW LH	1	
9	58200-32E01	CABLE ASSY,CLUTCH	1	
10	58273-31001	BOOT,CLUTCH CABLE	1	
11	58634-32E00	STOPPER,CLUTCH CABLE	1	
12	09403-09328	CLAMP	1	
13	58300-32E00	CABLE ASSY,THROTTLE	1	
14	58410-32E00	CABLE,STARTER	1	
15	09408-00066	CLIP	1	
16	09407-25401	CLAMP (L:235)	1	
17	01550-0612A	BOLT	1	

FIG.468A

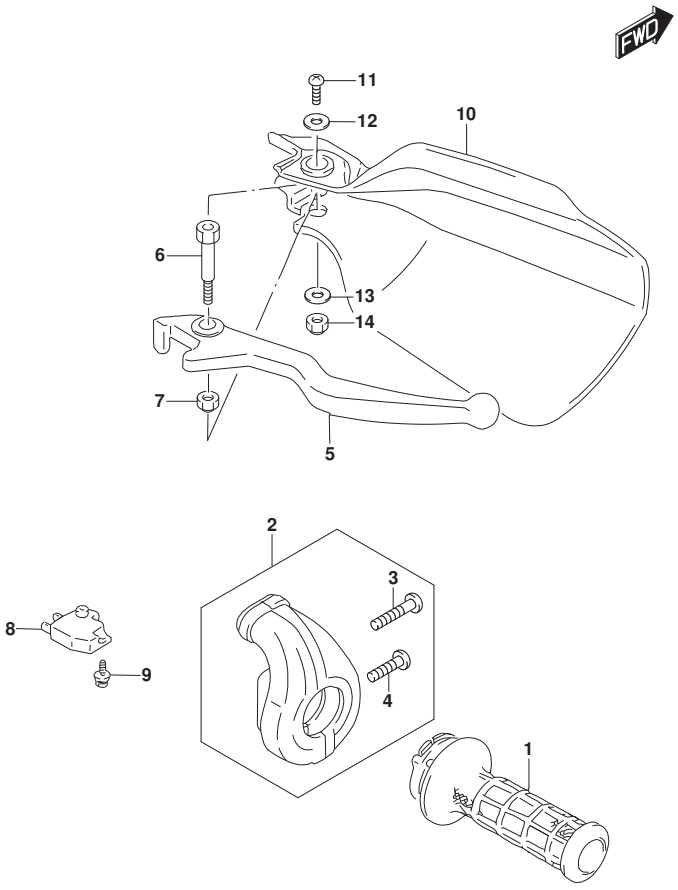

FIG.468A (1-D-12) RH HANDLE LEVER

REF NO.	PART NO.	DESCRIPTION	Q'TY	REMARKS
1	57110-12D11	GRIP,THROTTLE	1	
2	57100-14D00	CASE ASSY,THROTTLE	1	
3	02112-0525B	.SCREW	1	
4	02112-0520B	.SCREW	1	
5	57421-13001	LEVER,BRAKE	1	
6	57431-05D00	BOLT,BRAKE LEVER PIVOT	1	
7	57433-09F00	NUT,LEVER PIVOT	1	
8	57460-14J02	SWITCH ASSY,FR BRAKE	1	
9	57465-17C00	.SCREW	1	
10-1	57341-05D10-019	COVER,KNUCKLE RH (BLACK)	1	BODY COLOR:019
10-2	57341-05D10-30H	COVER,KNUCKLE RH (WHITE)	1	BODY COLOR:30H
11	02142-0510B	SCREW	1	
12	09160-05017	WASHER (5.5X16X1.2)	1	
13	09160-06130	WASHER (6.5X16X1.6)	1	
14	08319-2106A	NUT	1	

FIG.469A

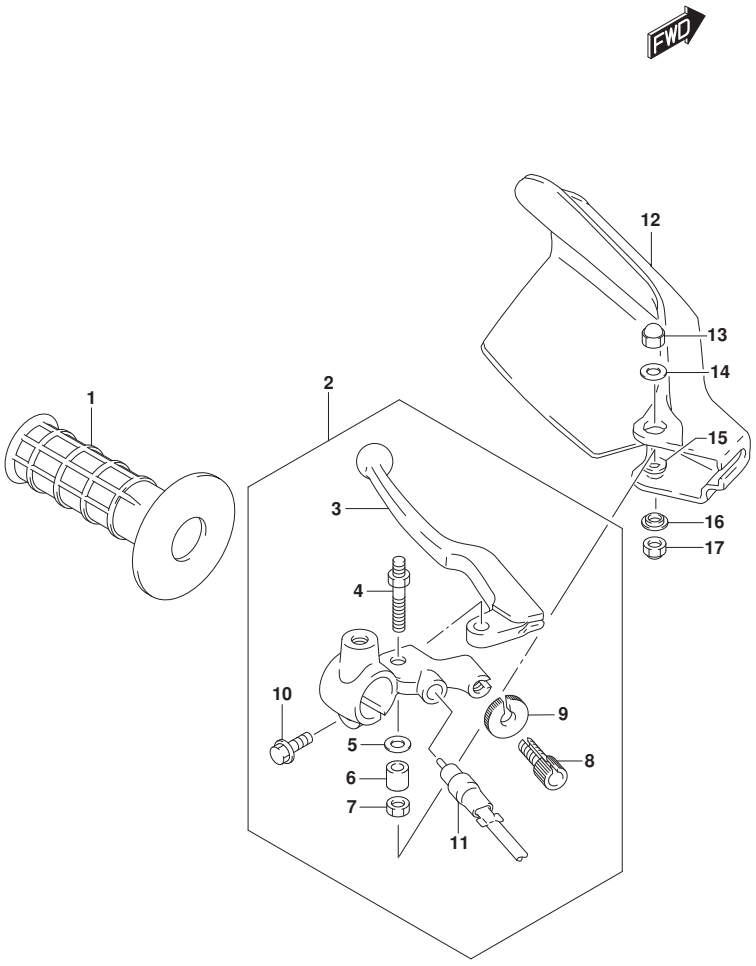

FIG.469A (1-D-13) LH HANDLE LEVER

REF NO.	PART NO.	DESCRIPTION	Q'TY	REMARKS
1	57211-12D00	GRIP,L	1	
2	57500-12E30	LEVER ASSY,CLUTCH	1	
3	57421-12E30	.LEVER,CLUTCH	1	
4	57531-12E30	.BOLT,PIVOT	1	
5	57533-12E30	.WASHER	1	
6	57532-12E30	.SPACER	1	
7	08319-2106B	.NUT	1	
8	57441-45C00	.ADJUSTER,WIRE	1	
9	57442-45C00	.NUT,LOCK	1	
10	01547-0620B	.BOLT	1	
11	57560-13E02	.SWITCH ASSY,CLUTCH	1	
12-1	57541-31D20-019	COVER,KNUCKLE LH (BLACK)	1	BODY COLOR:019
12-2	57541-31D20-30H	COVER,KNUCKLE LH (WHITE)	1	BODY COLOR:30H
13	08313-1006B	NUT	1	
14	09160-06154	WASHER (6.5X20X1.6)	1	
15	09160-06019	WASHER (6.5X16X1.2)	1	
16	09169-06055	WASHER	1	
17	08319-2106A	NUT	1	

FIG.474A

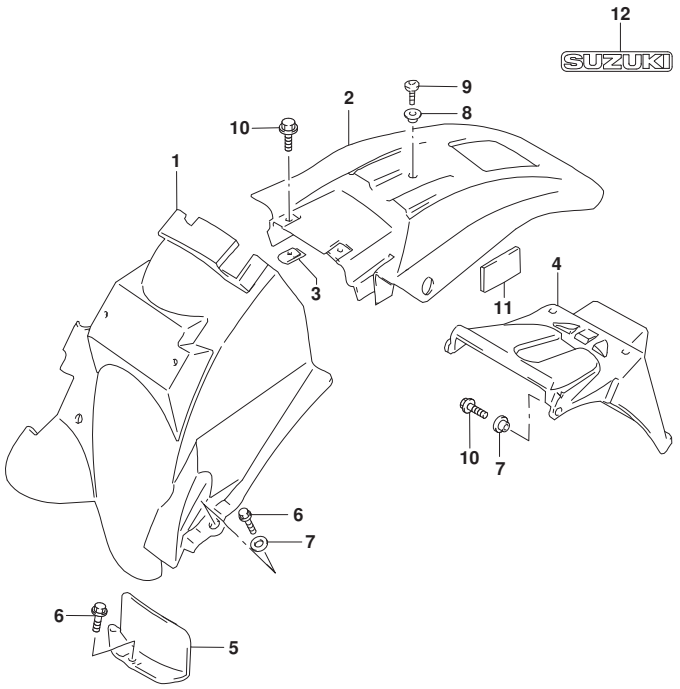

FIG.474A (1-D-14) REAR FENDER

REF NO.	PART NO.	DESCRIPTION	Q'TY	REMARKS
1	63112-32E00	BODY,REAR FENDER FRONT	1	
2-1	63113-32E20-019	BODY,REAR FENDER REAR (BLACK)	1	BODY COLOR:019
2-2	63113-32E20-30H	BODY,REAR FENDER REAR (WHITE)	1	BODY COLOR:30H
3	47153-19C01	PLATE,FRAME COVER	2	
4	63311-32E00	EXTENSION,REAR FENDER	1	
5	63411-32E00	MUD GUARD,REAR FENDER	1	
6	09113-06001	BOLT (6X16)	4	
7	09169-06073	WASHER (6.1X17.0X4.8)	4	
8	09169-06053	WASHER	1	
9	09139-06024	SCREW (6X16)	1	
10	01550-0616B	BOLT	6	
11	63149-01C00	CUSHION (25X40X3)	2	
12-1	68177-04A00-CT5	EMBLEM, "SUZUKI" (SILVER,BLACK)	1	BODY COLOR:019
12-2	68177-04A00-8YM	EMBLEM, "SUZUKI" (WHITE,BLACK)	1	BODY COLOR:30H

FIG.496A

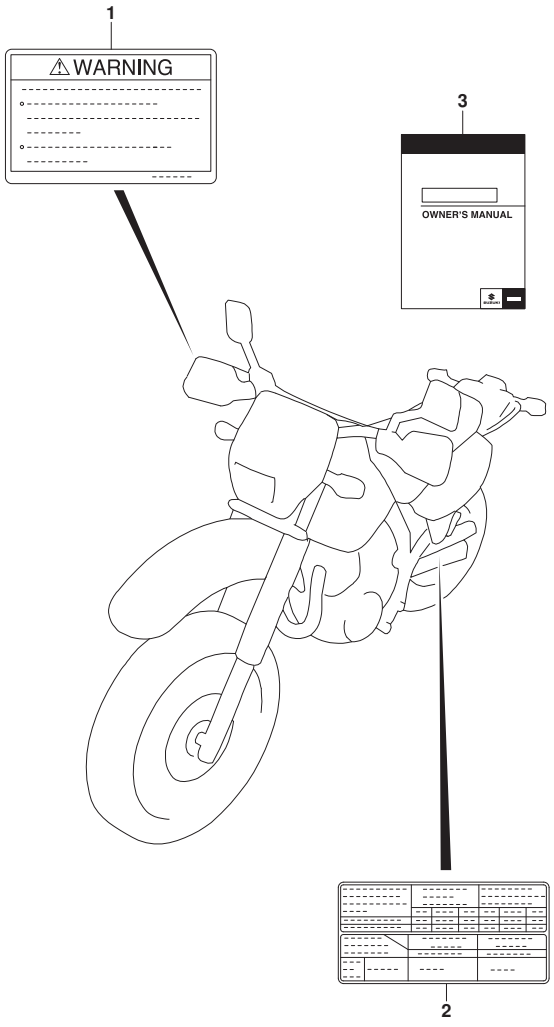

FIG.496A (1-D-15) LABEL

REF NO.	PART NO.	DESCRIPTION	Q'TY	REMARKS
1	68319-02K01	LABEL,GENERAL WARNING	1	
2	68332-32E01	LABEL	1	
3	99011-32E75-01A	MANUAL,OWNER'S	1	

FIG.505A

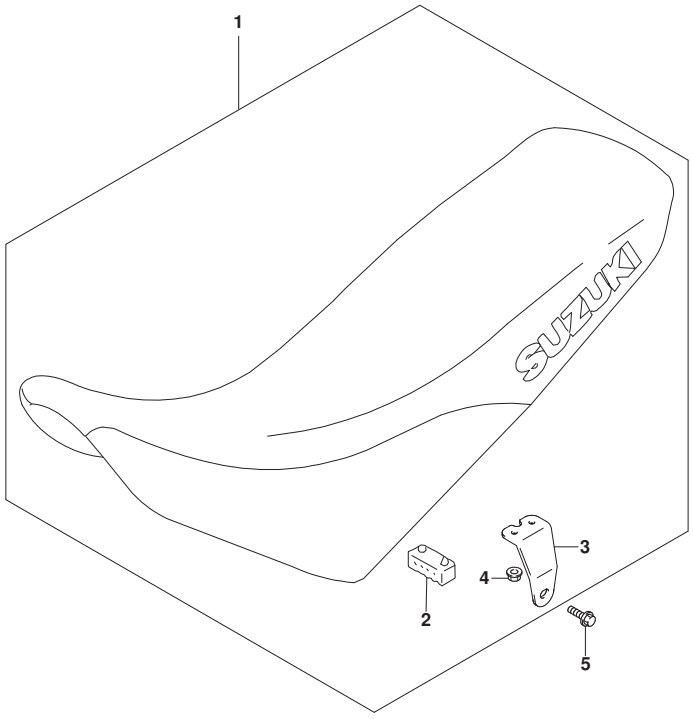

FWD

FIG.505A (1-D-16) SEAT

REF NO.	PART NO.	DESCRIPTION	Q'TY	REMARKS
1	45100-32E40-BYD	SEAT ASSY (GRAY,BLACK,SILVER)	1	
2	45149-31300	.CUSHION,SEAT (40X20X15)	6	
3	45117-32E10	.BRACKET	2	
4	08316-1006A	.NUT	4	
5	01550-0812A	BOLT	2	

FIG.521A

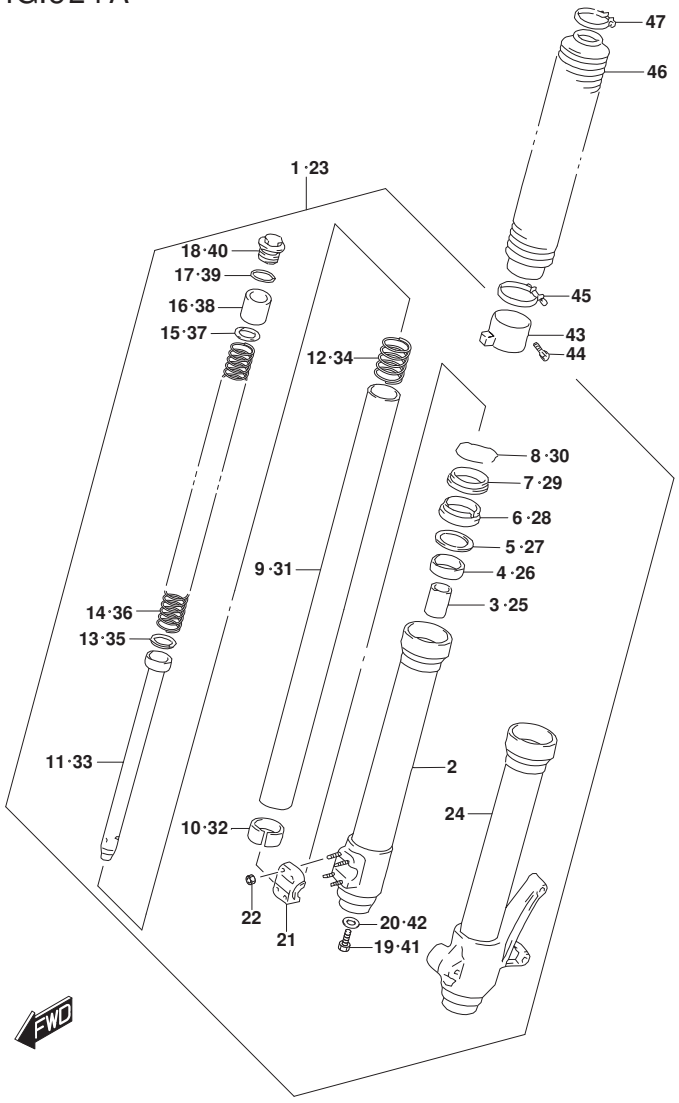

FIG.521A (1-E-2) FRONT FORK DAMPER

REF NO.	PART NO.	DESCRIPTION	Q'TY	REMARKS
1	51103-32E01	DAMPER ASSY,FR FORK,R	1	
2	51130-32E00	.TUBE,OUTER RH	1	
3	51195-06C00	.PIECE,OIL LOCK	1	
4	51167-40C00	.METAL,SLIDE	1	
5	51158-14200	.WASHER	1	
6	51153-14330	.SEAL,OIL	1	
7	51173-14330	.SEAL,DUST	1	
8	51156-14200	.RING,STOPPER	1	
9	51110-32E00	.TUBE,INNER	1	
10	51121-40C00	..PISTON	1	
11	51190-32E00	.CYLINDER	1	
12	51177-14330	..SPRING,REBOUND	1	
13	51196-31D00	..RING,PISTON	1	
14	51171-32E00	.SPRING	1	
15	51172-32E00	.WASHER	1	
16	51176-32E00	.SPACER	1	
17	51117-14201	.O RING	1	
18	51351-31D00	.CAP,FORK	1	
19	51147-16510	.BOLT,FORK CYLINDER (10X25)	1	
20	51148-41310	.GASKET	1	
21	51132-32E00	.HOLDER,AXLE RH	1	
22	51168-32E40	.NUT,HOLDER,AXLE	4	
23	51104-32E01	DAMPER ASSY,FR FORK,L	1	
24	51140-32E00	.TUBE,OUTER LH	1	
25	51195-06C00	.PIECE,OIL LOCK	1	
26	51167-40C00	.METAL,SLIDE	1	
27	51158-14200	.WASHER	1	
28	51153-14330	.SEAL,OIL	1	
29	51173-14330	.SEAL,DUST	1	
30	51156-14200	.RING,STOPPER	1	
31	51110-32E00	.TUBE,INNER	1	
32	51121-40C00	..PISTON	1	
33	51190-32E00	.CYLINDER	1	
34	51177-14330	..SPRING,REBOUND	1	
35	51196-31D00	..RING,PISTON	1	

FIG.521A

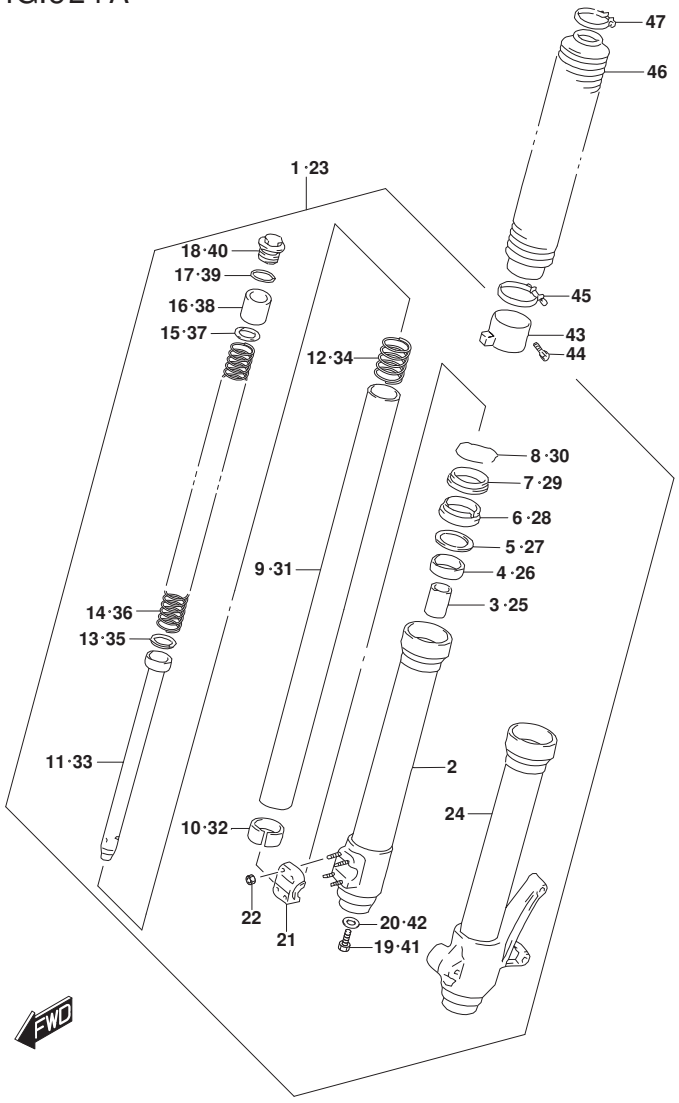

FIG.521A (1-E-3) FRONT FORK DAMPER

REF NO.	PART NO.	DESCRIPTION	Q'TY	REMARKS
36	51171-32E00	.SPRING	1	
37	51172-32E00	.WASHER	1	
38	51176-32E00	.SPACER	1	
39	51117-14201	.O RING	1	
40	51351-31D00	.CAP,FORK	1	
41	51147-16510	.BOLT,FORK CYLINDER (10X25)	1	
42	51148-41310	.GASKET	1	
43	51203-32E01	GUIDE,BOOT	2	
44	51579-32E40	BOLT,GUIDE,BOOT	2	
45	51576-00B00	BAND,BOOT,LOWER	2	
46	51571-32E01	BOOT,FRONT FORK	2	
47	51575-32E00	BAND,BOOT	2	

FIG.524A

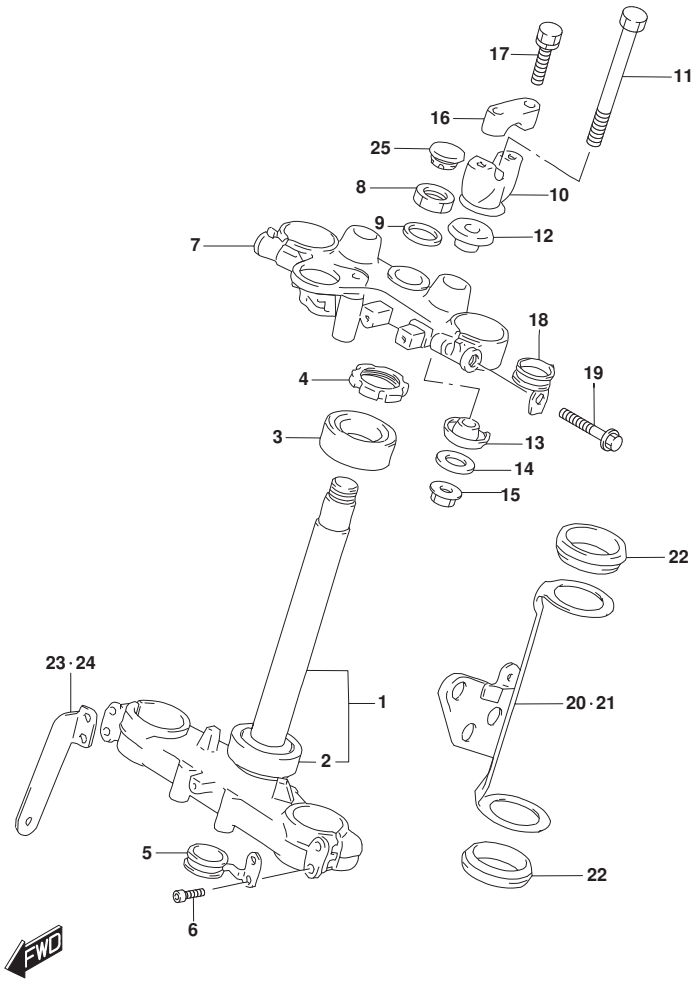

FIG.524A (1-E-4) STEERING STEM

REF NO.	PART NO.	DESCRIPTION	Q'TY	REMARKS
1	51410-32E01	BRACKET,UNDER	1	
2	09265-30035	.BEARING	1	
3	09265-30035	BEARING	1	
4	51631-28E00	NUT,STEERING	1	
5	51453-32E10	GUIDE,BRAKE HOSE LOWER	1	
6	51451-32E40	BOLT	4	
7	51311-32E00	HEAD,STEERING STEM	1	
8	51353-32E00	NUT	1	
9	51356-27C00	WASHER,STEM HEAD (24.5X34X1.6)	1	
10	56221-14330-291	HOLDER,HANDLE LOWER (BLACK)	2	
11	56321-28C00	BOLT	2	
12	56241-14A00	DAMPER,UPPER	2	
13	56242-14200	RUBBER, LOWER	2	
14	09160-10035	WASHER (10.5X28X2.3)	2	
15	08319-3110A	NUT	2	
16	56211-29320-291	HOLDER,HANDLE (BLACK)	2	
17	51321-31D20	BOLT,HANDLE HOLD	4	
18	51288-32E00	CLIP	1	
19	51328-32E40	BOLT,BRACKET,UPP	2	
20	51530-32E00	COVER,FORK RH	1	
21	51540-32E00	COVER,FORK LH	1	
22	51553-15D01	DAMPER,HEAD LAMP HSG BRKT	4	
23	35956-44B01	BRACKET,FR SIDE REFLECTOR RH	1	
24	35957-44B01	BRACKET,FR SIDE REFLECTOR LH	1	
25	09250-12006	CAP (OD:20)	1	

FIG.530A

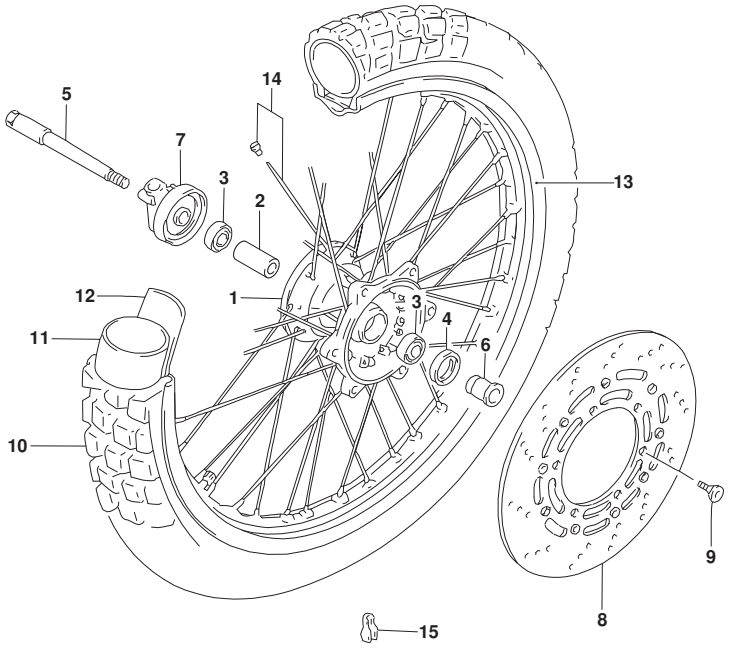

FIG.530A (1-E-5) FRONT WHEEL

REF NO.	PART NO.	DESCRIPTION	Q'TY	REMARKS
1	54111-31D01	HUB,FRONT WHEEL	1	
2	54731-32E00	SPACER,FRONT HUB BEARING	1	
3	08123-6003B	BEARING,FRONT HUB	2	
4	09284-23001	OIL SEAL (23X35X6)	1	
5	54711-05D01	AXLE,FRONT	1	
6	54751-05D00	SPACER,FRONT AXLE LH	1	
7	54600-05D01	BOX ASSY,SPEEDOMETER GEAR	1	
8	59220-32E00	DISC,FRONT BRAKE	1	
9	09106-08155	BOLT (8X20)	6	
10	#55110-32E00	TIRE,FRONT (90/90-21 54S)	1	
11	#55200-32E01	TUBE ASSY,WHEEL INNER	1	
12	#55261-32E01	PROTECTOR,WHEEL INNER TUBE	1	
13	55311-44B00	RIM,FRONT WHEEL (21X1.85)	1	
14	55320-31D00	SPOKE SET,FRONT WHEEL	1	
15-1	55412-41F00	BALANCER,WHEEL (20G)	AR	
15-2	55413-41F00	BALANCER,WHEEL (30G)	AR	

FIG.535A

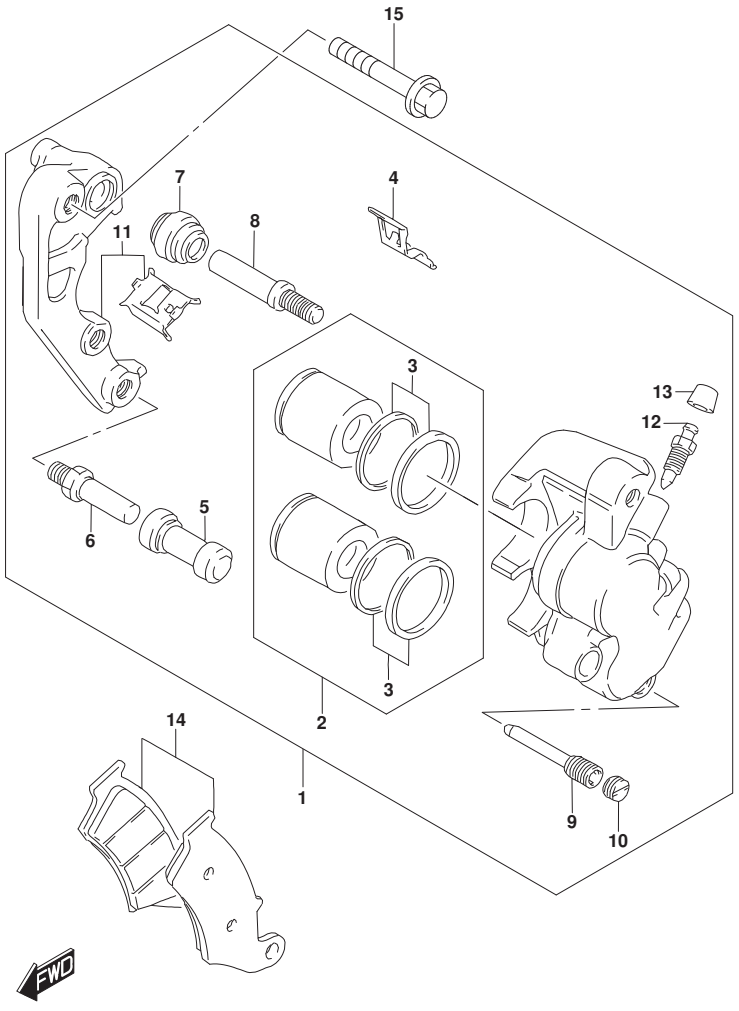

FIG.535A (1-E-6) FRONT CALIPER

REF NO.	PART NO.	DESCRIPTION	Q'TY	REMARKS
1	59300-13E01-999	CALIPER ASSY,FRONT LH	1	
2	59300-27840	.PISTON SET	1	
3	59300-13820	..SEAL SET,PISTON	1	
4	59315-13E00	.SPRING,PAD	1	
5	59386-13A00	.BOOT	1	
6	59382-14500	.PIN	1	
7	59303-14500	.BOOT	1	
8	59305-27C00	.PIN	1	
9	59345-13E00	.PIN,HANGER	1	
10	59146-21E10	.PLUG,PIN	1	
11	59350-13E00	.BRACKET	1	
12	59121-01A00	.BLEEDER	1	
13	59122-46H00	.CAP,BLEEDER	1	
14	59300-13830	PAD SET	1	
15	09103-08338	BOLT (8X40)	2	

FIG.537A

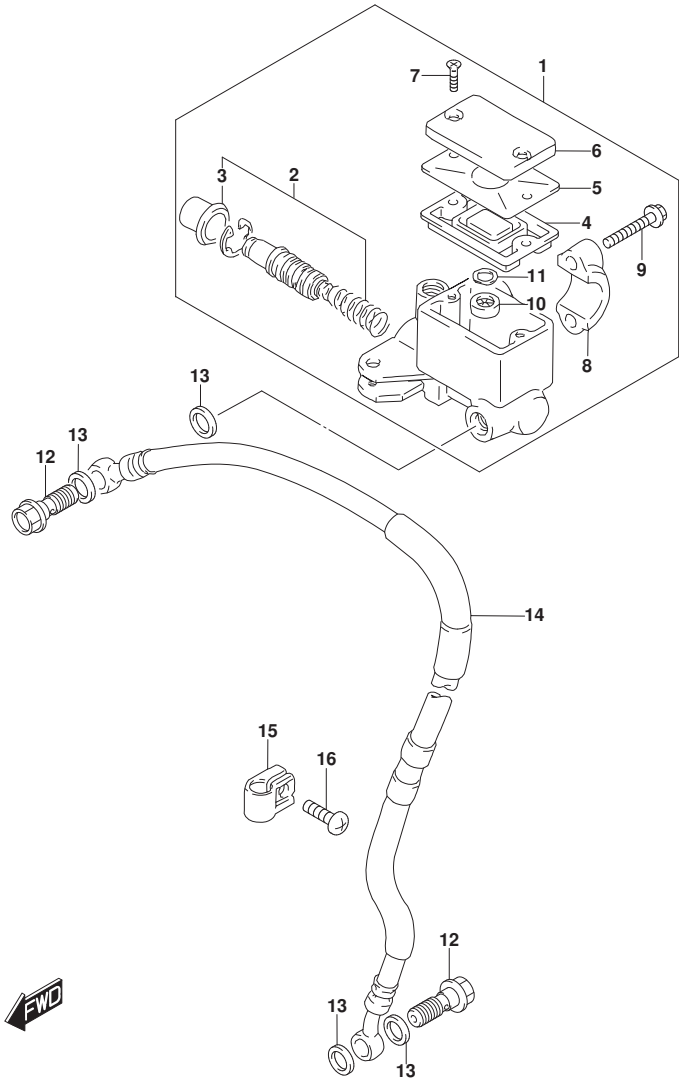

FIG.537A (1-E-7) FRONT MASTER CYLINDER

REF NO.	PART NO.	DESCRIPTION	Q'TY	REMARKS
1	59600-31D50	CYLINDER ASSY, FRONT MASTER	1	
2	59600-04810	.PISTON/CUP SET	1	
3	59666-44300	..BOOT	1	
4	59667-04700	.DIAPHRAGM	1	
5	59668-14F00	.PLATE,DIAPHRAGM	1	
6	59669-14F10	.CAP	1	
7	69689-49300	.SCREW,RESERVOIR CAP	2	
8	59671-36500	.HOLDER,MASTER CYLINDER	1	
9	59675-02FA0	.BOLT (6X22)	2	
10	59748-15400	.SEPARATOR	1	
11	59749-15400	.PLATE	1	
12	09360-10062	UNION (10X1.25X22)	2	
13	09161-10009	WASHER (10X15X1.5)	4	
14	59480-32E01	HOSE,FRONT BRAKE	1	
15	58621-07A20	CLAMP,BRAKE HOSE	1	
16	02142-0620A	SCREW	1	

DR650SEM1_E24_537A
FRONT MASTERCYLNDER

FIG.541A

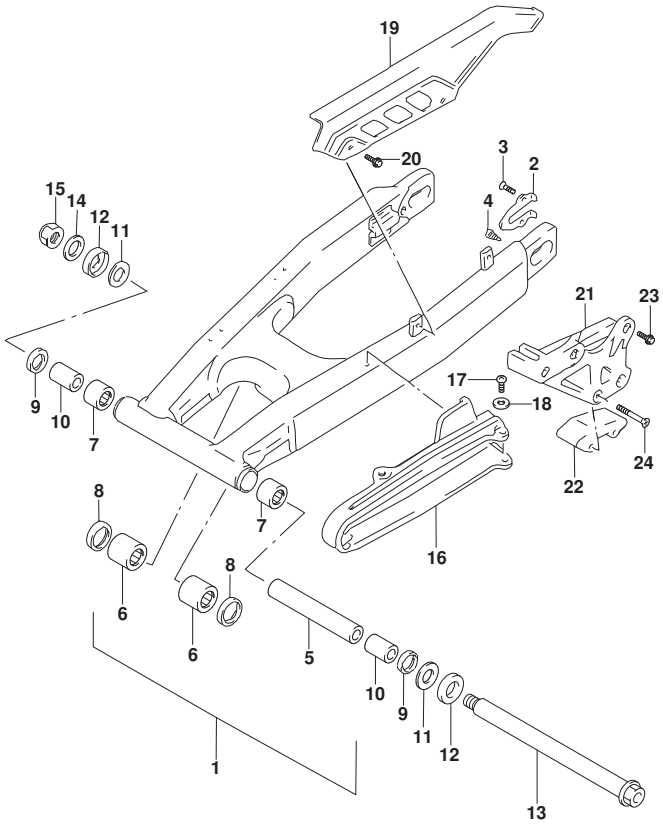

FIG.541A (1-E-8) REAR SWINGINGARM

REF NO.	PART NO.	DESCRIPTION	Q'TY	REMARKS
1	61000-32E30	SWINGING ARM ASSY, REAR	1	
2	61128-29E00	.PLATE,RR SWGARM AXLE	1	
3	09126-05009	.SCREW (5X8)	2	
4	61431-13E10	.STOPPER,CHAIN ADJUSTER (10X17)	2	
5	61282-32E00	.SPACER,SWGARM PIVOT,CENTER	1	
6	09263-20071	.BEARING (20X27X23.5)	2	
7	09263-22017	.BEARING (22X29X30)	2	
8	09283-20031	OIL SEAL (20X27X5)	2	
9	09285-22006	OIL SEAL	2	
10	61251-14D00	SPACER,SWGARM PIVOT,BRG	2	
11	08211-17341	WASHER	2	
12	61262-28C11	COVER,DUST	2	
13	64711-08D00	AXLE,REAR	1	
14	08322-0116A	WASHER	1	
15	09159-16007	NUT	1	
16	61273-13E01	BUFFER,CHAIN TOUCH DEFENSE	1	
17	02142-0612A	SCREW	3	
18	09169-06057	WASHER	3	
19	61311-01A03	CASE,CHAIN	1	
20	09116-06096	BOLT (6X10)	2	
21	61340-15E00	GUIDE,CHAIN	1	
22	61348-15E00	DEFENSE,CHAIN GUIDE	1	
23	01550-0616A	BOLT	3	
24	02122-0650A	SCREW	2	

FIG.543A

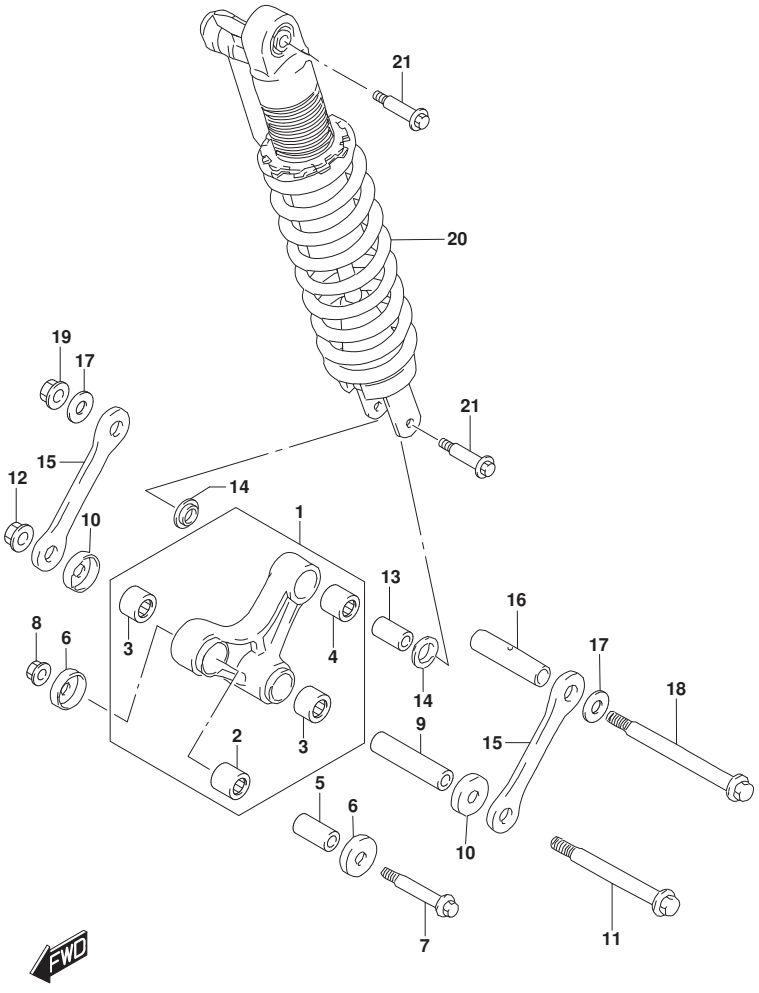

FIG.543A (1-E-9) REAR CUSHION LEVER

REF NO.	PART NO.	DESCRIPTION	Q'TY	REMARKS
1	62600-32840	LEVER SET,REAR CUSHION	1	
2	09263-17027	.BEARING (17X24X20)	1	
3	09263-21012	.BEARING (21X27X20)	2	
4	09263-20121	.BEARING (20X27X30)	1	
5	62317-27C10	SPACER,RR CUSHION LEVER,FR (12 X20X34)	1	
6	62162-28E01	SEAL,DUST	2	
7	62658-01C60	BOLT,RR CUSHION LEVE,FRONT (12 X65)	1	
8	08319-3112A	NUT	1	
9	62626-13E00	SPACER,RR CUSHION LEVER CENTER (15X21X74)	1	
10	62682-13E00	SEAL,RR CUSHION LEVER CENTER	2	
11	62621-27C20	BOLT,REAR CUSHION LEVER,CENTER (14X109)	1	
12	08319-3114A	NUT	1	
13	62684-40A10	SPACER,RR CUSHION LEVER (10X17 X30)	1	
14	62624-13E00	SEAL,RR CUSHION LEVER,RR DUST	2	
15	62641-32E00	ROD,REAR CUSHION LEVER	2	
16	62626-14D00	SPACER,RR CUSHION LEVER,CTR (1 4X20X74)	1	
17	08211-14321	WASHER	2	
18	62621-17C00	SHAFT,RR CUSHION LEVER,FRONT (14X112)	1	
19	08319-3114A	NUT	1	
20	62100-32E21-019	ABSORBER ASSY,REAR SHOCK (BLAC K)	1	
21	62648-14500	BOLT,REAR CUSHION ROD,UPPER (1 0X48)	2	

FIG.550A

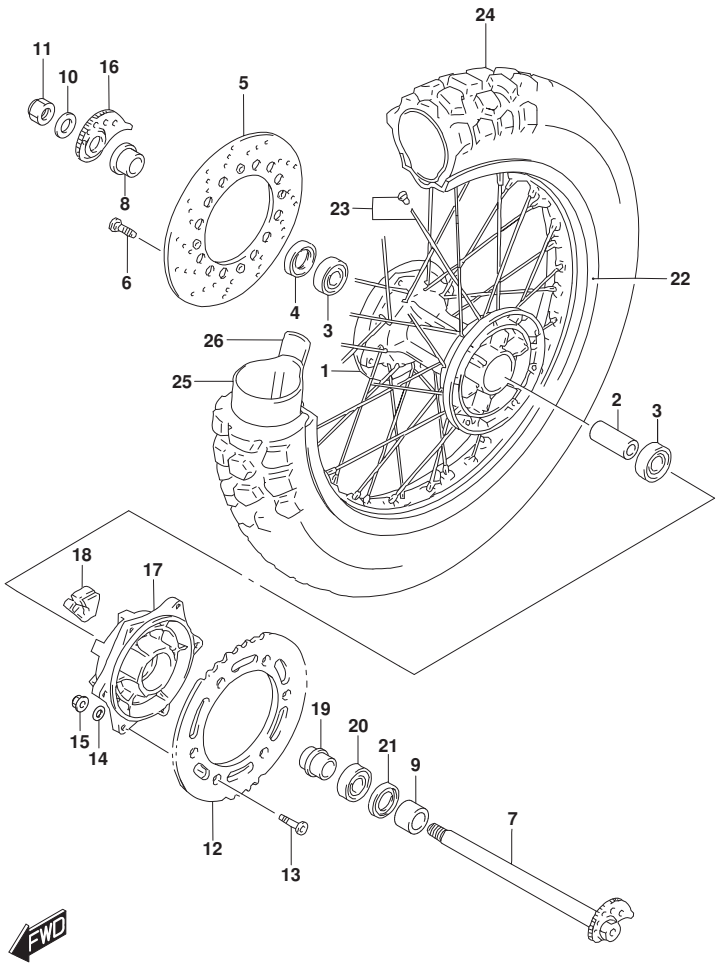

FIG.550A (1-E-10) REAR WHEEL

REF NO.	PART NO.	DESCRIPTION	Q'TY	REMARKS
1	64111-15D10	HUB,REAR WHEEL	1	
2	64731-15D00	SPACER,RR HUB BEARING	1	
3	08123-6204B	BEARING,REAR WHEEL HUB	2	
4	09283-26019	OIL SEAL (26X47X5)	1	
5	69211-32E01	DISC,REAR BRAKE	1	
6	09106-08155	BOLT (8X20)	4	
7	64710-32E00	AXLE,REAR	1	
8	64741-05D00	SPACER,REAR AXLE RH	1	
9	64751-15D00	SPACER,REAR AXLE LH	1	
10	09160-19022	WASHER (19X32X3.2)	1	
11	08319-2118A	NUT	1	
12	64511-32E00	SPROCKET,REAR (NT:42)	1	
13	09120-08010	BOLT (8X30.5)	6	
14	08322-0108B	WASHER	6	
15	08319-3108A	NUT	6	
16	61410-32E00	ADJUSTER,CHAIN RH	1	
17	64611-15D01	DRUM,REAR SPROCKET MOUNTING	1	
18	64651-32E00	ABSORBER,REAR HUB SHOCK	6	
19	64733-15D00	RETAINER,REAR SPROCKET DRUM	1	
20	08123-6205B	BEARING,REAR WHEEL	1	
21	09283-34003	OIL SEAL (34X52X6)	1	
22	65311-32E01	RIM,RR WHEEL (17M/CXMT2.50)	1	
23	65320-32E00	SPOKE SET,REAR WHEEL	1	
24	#65110-32E00	TIRE,REAR (120/90-17 64S)	1	
25	65200-32E01	TUBE ASSY,WHEEL INNER	1	
26	#65261-32E01	PROTECTOR,WHEEL INNER TUBE	1	

FIG.555A

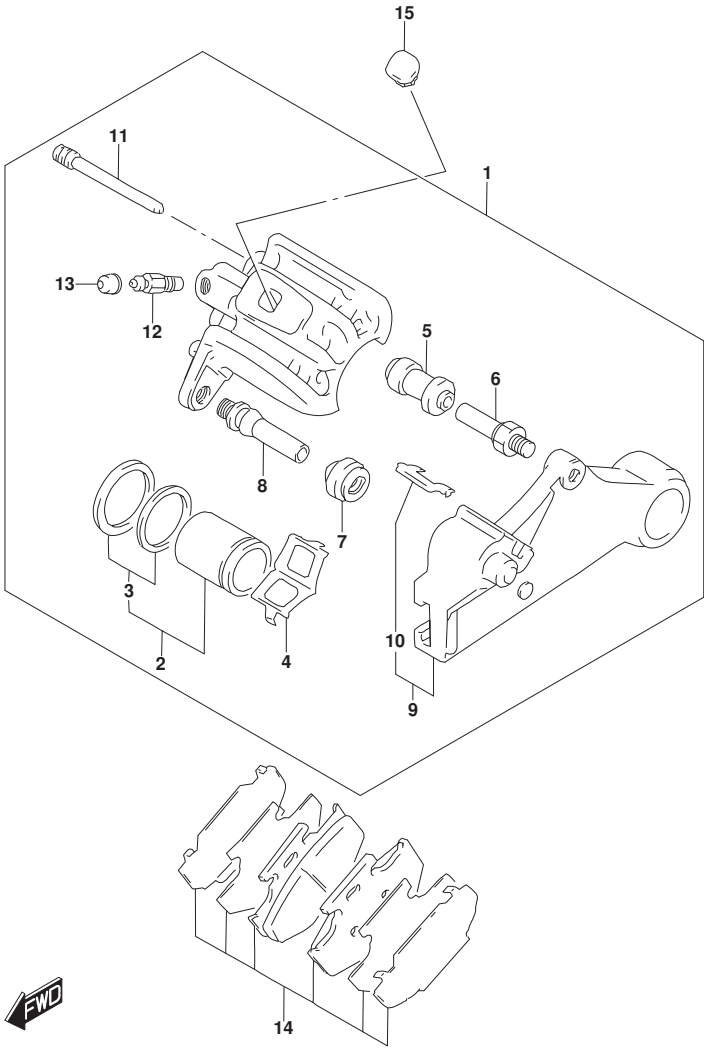

FIG.555A (1-E-11) REAR CALIPER

REF NO.	PART NO.	DESCRIPTION	Q'TY	REMARKS
1	69100-32E00-999	CALIPER ASSY,REAR	1	
2	69100-43830	.PISTON SET	1	
3	69100-13810	..SEAL SET,PISTON	1	
4	59315-27C10	.SPRING,PAD	1	
5	59386-13A00	.BOOT	1	
6	59382-27C30	.BOLT	1	
7	59303-14500	.BOOT	1	
8	59305-27C00	.PIN	1	
9	69150-32E00	.BRACKET	1	
10	69113-43D00	..RETAINER,BRACKET	1	
11	69345-43D00	.PIN,HANGER	2	
12	59121-01A00	.BLEEDER	1	
13	59122-46H00	.CAP,BLEEDER	1	
14	69100-32830	PAD & SHIM SET	1	
15	69171-14D00	COVER,REAR CALIPER BODY	1	

FIG.558A

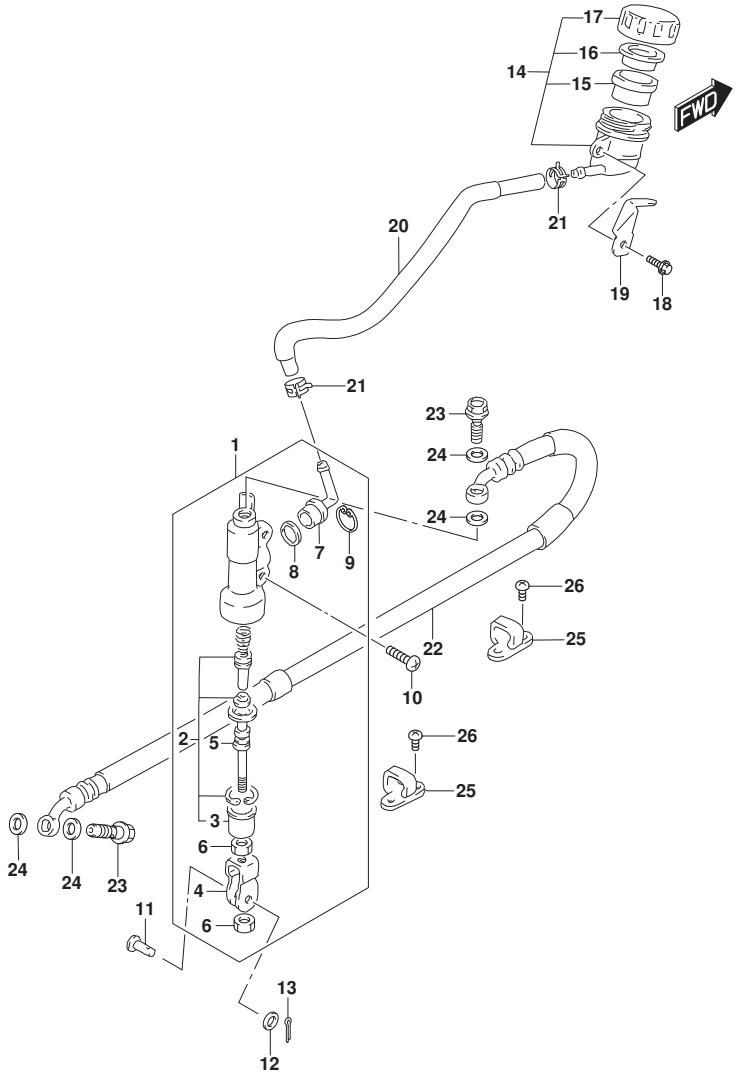

FIG.558A (1-E-12) REAR MASTER CYLINDER

REF NO.	PART NO.	DESCRIPTION	Q'TY	REMARKS
1	69600-32E00	CYLINDER ASSY,REAR MASTER	1	
2	69600-04820	.PISTON/CUP SET	1	
3	69691-00A00	..BOOT	1	
4	69692-13E00	.YOKE	1	
5	69670-27A30	.ROD,PUSH	1	
6	69693-05A00	.NUT	2	
7	69672-00B20	.CONNECTOR	1	
8	69686-34200	.O RING	1	
9	69674-00B20	.CIRCLIP	1	
10	09139-06067	SCREW (6X16)	2	
11	09200-08048	PIN (8X20)	1	
12	09160-08090	WASHER (8.5X14X1.6)	1	
13	04111-2015A	PIN	1	
14	69740-03D00	TANK ASSY,REAR BRAKE RESERVOIR	1	
15	69667-00B20	.DIAPHRAGM	1	
16	69668-00B20	.PLATE	1	
17	69669-03D00	.CAP	1	
18	01550-0616A	BOLT	1	
19	69743-14D10	GUARD,RSVR TANK CAP	1	
20	69730-32E00	HOSE,RESERVOIR TANK	1	
21	09401-12404	CLIP (ID:12)	2	
22	69480-32E02	HOSE,REAR BRAKE	1	
23	09360-10062	UNION (10X1.25X22)	2	
24	09161-10009	WASHER (10X15X1.5)	4	
25	61196-27C30	GUIDE,REAR BRAKE (HOLE 1-5.5)	2	
26	02142-0510A	SCREW	2	

DR650SEM1_E24_558A
REARMASTER CYLINDER

PART NO.	FIG.NO.-REF.NO.
10000	
11100-32E22	103A-1
11115-32E70	103A-5
11141-32E00	101A-2
	103A-6
11151-32E00	103A-31
11175-44B00	103A-21
11177-44B01	101A-3
	103A-22
11180-43410	108A-5
11211-32E10-0F0	107A-1
11241-04F20	101A-4
	107A-4
11300-32881	108A-1
11317-32E00	108A-15
11323-32E00	108A-8
11340-32E00	112A-1
11351-32E01	112A-12
11361-32E00	112A-20
11371-12D30	112A-22
11390-04F00	108A-6
11400-32874	101A-1
11482-32E00	101A-5
	112A-3
11483-32E00	101A-6
	112A-13
11485-12D01	101A-7
	112A-23
11610-20C00	108A-21
11610-45410	108A-20
11971-33210	112A-2
12000-32820	120A-1
12111-32E00-0F0	120A-18
12140-32E10	120A-19
12151-14A01	120A-20
12161-32E00	120A-2
12211-32E00	120A-3
12221-32810	120A-6
12261-32E00	120A-7
12548-37400	120A-11
12600-09860	122A-6
12600-12D01	122A-1
12612-12D01	122A-2
12618-31D01	122A-3
12651-32E00	124A-1
12664-04F00	120A-13
12666-32E00	124A-4
12669-32E00	124A-5
12710-32E01	126A-1
12741-32E00	126A-2
12747-44B00	126A-4
12760-32E00	127A-1
12771-32E00	127A-2
12811-32E00	127A-3
12812-32400	127A-4
12830-32E00	127A-6
12837-24A10	101A-8
	127A-7
12840-32E00	126A-7
12842-38A00	126A-8
	126A-11
12843-32400	126A-9
	126A-12
12850-32E00	126A-10
12861-14D50	126A-13
12871-14D50	126A-14
12911-19B00	126A-16
12912-42A00	126A-17
12920-32E00	126A-18
12931-33201	126A-19
12932-24400	126A-20
12933-81400	126A-21
13110-32E00	103A-25
13200-32E31	130A-1
13236-12C00	130A-23
13247-13A00	130A-24
13250-12EH0	130A-15
13258-44B00	130A-11
13267-31D00	130A-31
13267-31D10	130A-35
13268-47070	130A-28
13271-33C00	130A-33
13278-02340	130A-37
13279-47070	130A-29
13291-29900	130A-27
13295-29900	130A-26
13331-07D00	130A-13
13331-12D00	130A-19
13374-35C00	130A-17
13374-46710	130A-16
13383-32E00	130A-22
13387-07D00	130A-21
13394-31210	130A-20
13411-12D00	130A-7
13417-17D00	130A-2
13417-22010	130A-8
13418-43410	130A-9
13432-95210	130A-34
13501-32E00	130A-3
13502-41C00	130A-5
13507-07D02	130A-4
13601-05148-XC0	130A-36
13607-37010	130A-30
13615-43010	130A-32
13630-38E00	130A-40
13681-04011	130A-10
13683-32E01	130A-18
13684-32E11	130A-39
13700-32E00	155A-1
13740-32E00	155A-6
13780-32E00	155A-2
13791-32E00	155A-3
13792-32E00	155A-4
13800-32E00	155A-19
13810-14D02	155A-5
13826-14D01	155A-8
13850-32E00	155A-10
13856-19B03	155A-16
13858-14D20	155A-12
13859-41B10	155A-18
13881-32E00	155A-15
13891-32E00	155A-14
14150-32E20	163A-1
14180-32E00	163A-4
14181-22D01	101A-9
	163A-2
14186-32E00	163A-8
14310-32E21	163A-9
14771-32E00	163A-13
14781-32E00	163A-10
14782-32E01	163A-19
16321-32E00	170A-7
16322-32E01	170A-8
16331-32E00	170A-2
16400-32E00	170A-1
16460-32E00	178A-5
16470-32E00	178A-6
16480-32E10	117A-1
16510-37450	170A-13
16512-14D00	170A-15
16520-32E01	170A-10
16523-32E00	170A-11
16600-32E00	178A-1
16629-12D00	178A-4
16640-32E11	178A-10
16650-32E00	178A-12

PART NO.	FIG.NO.-REF.NO.
18780-32E00	155A-20
20000	
21111-32E00	120A-14
21200-44B21	201A-1
21251-32E00	201A-3
21410-44B00	201A-4
21441-31D00	201A-9
21441-44B01	201A-10
21451-44B00	201A-11
21451-49200	201A-15
21462-31D00	201A-16
21471-49100	201A-12
21481-45100	201A-13
23165-31D00	201A-19
23261-32E00	201A-21
23271-31D00	201A-23
24120-14810	206A-1
24130-14A10	206A-15
24221-14A10	206A-2
24231-12D21	206A-3
24241-14A10	206A-4
24251-14A10	206A-6
24252-19F00	206A-5
24311-14A01	206A-16
24321-14A10	206A-19
24331-14A20	206A-22
24332-24510	206A-23
24341-14A10	206A-27
24351-14A10	206A-28
24741-14A00	206A-12
24751-32E00	206A-13
25211-37401	212A-1
25221-37401	212A-2
25231-14A01	212A-3
25310-37400	212A-6
25322-31310	212A-7
25323-34201	212A-8
25324-34201	212A-9
25331-14A00	212A-12
25341-40001	212A-14
25350-37400	212A-16
25381-37401	212A-20
25411-20A11	212A-4
25421-14A02	212A-5
25510-32E00	212A-22
25600-32E00	212A-28
25652-03D00	212A-29
25671-01011	212A-24
27511-31D00	206A-32
27512-44B00	206A-33
27517-37400	206A-34
27600-32C90-110	206A-36
27620-32C90	206A-37
30000	
31100-32E01	301A-1
31130-38B00	301A-2
31132-38B00	301A-4
31135-38B00	301A-5
31143-49040	301A-3
31156-48B00	301A-6
31170-32E00	301A-7
31264-31300	301A-8
31280-26D00	301A-9
31800-26E00	312A-1
31861-26E00	312A-2
31861-48B10	312A-8
31890-32E00	312A-5
32101-32E01	303A-1
32102-32E00	303A-2
32371-32E00	303A-7
32800-32E00	312A-19
32900-32E10	312A-16
33410-32E00	312A-9
33416-32E00	312A-11
33510-43010	312A-13
33541-47D00	312A-14
33542-38B00	312A-15
33624-32E00	310A-3
33630-32C00	310A-1
33651-37000	310A-5
33652-08420	310A-6
33810-32E00	312A-7
33820-32E00	310A-2
33860-32E00	310A-4
34120-32E20	330A-1
34124-44B30	330A-2
34167-42A90	330A-10
34170-15D21	330A-5
34184-12D00	330A-3
34189-30921	330A-8
34910-32E00	330A-12
34938-14D21	330A-14
34938-14D30	330A-16
34950-32E10	330A-4
34954-42A90	330A-7
35100-12ED0-999	333A-1
35121-12EA0	333A-2
35135-12E20	333A-3
35135-45900	333A-4
35136-38A00	333A-5
35139-45230	333A-6
35141-12ED0	333A-7
35151-12EA0	333A-8
35154-12EA0	333A-9
35173-01440	333A-10
35601-29E30	334A-1
35603-29E90	334A-10
35612-17C20	334A-2
35613-27A00	334A-3
	334A-12
35623-27A00	334A-4
	334A-13
35652-17C20	334A-11
35671-32E00	334A-7
35681-32E00	334A-8
35710-32E01	339A-1
35712-13E00	339A-2
35713-13E00	339A-5
35713-32E00	339A-6
35718-32E01	339A-7
35725-40511	334A-5
	334A-14
35761-24B31	339A-18
35766-24B30	339A-19
35910-32E00	339A-14
35912-38A20	339A-16
35913-38A30	339A-17
35917-17C10	339A-15
35927-00A10	339A-22
35950-14A11	333A-16
35956-44B01	524A-23
35957-44B01	524A-24
36380-32E10	330A-21
36382-32E00	330A-25

PART NO.	FIG.NO.-REF.NO.
36394-32E00	330A-22
36610-32E30	350A-1
36611-38A10	350A-2
36618-15D21	350A-3
36740-32E00	350A-17
36920-44A01	333A-12
37000-04832	350A-14
37100-04F10	350A-15
37146-33E00	350A-26
37200-32E31	355A-1
37400-32E00	355A-3
37720-32E00	212A-31
37740-32E00	350A-19
37840-44X50	350A-21
38500-32E00	350A-24
38610-26E01	334A-17
38740-24X50	350A-23
40000	
41100-32E50-YPT	401A-1
41540-32E00	401A-23
41550-32E00	401A-20
41552-37210	401A-21
41561-32E00	401A-29
41911-32E00	401A-3
41930-32E00-019	401A-9
41991-32E00	401A-6
42310-32E20	407A-1
43110-32E00	407A-6
43251-32E00	401A-12
43510-32E00	415A-1
43520-32E00	415A-2
43550-03B00-019	415A-3
43560-03B00-019	415A-4
43585-32E00	401A-31
43586-32E00	401A-33
43595-32E00	401A-32
43610-23E00	415A-14
43650-32E00-019	415A-11
43710-23E00	415A-15
43750-32E00-019	415A-12
43911-13E00	401A-15
43970-32E10-YPT	416A-1
43980-32E10-YPT	416A-2
44200-13831	420A-3
44271-32E00	420A-7
44280-32E10	420A-9
44290-32E10	420A-10
44300-32E01	421A-1
44348-87421	421A-2
44511-12D00	420A-12
44541-13E00	420A-13
44613-13600	420A-6
45100-32E40-BYD	505A-1
45117-32E10	505A-3
45149-31300	505A-2
47111-32E10-019	445A-1-1
47111-32E10-30H	445A-1-2
47153-19C01	474A-3
47166-32E00	445A-2
47167-32E00	445A-3
47211-32E10-019	445A-4-1
47211-32E10-30H	445A-4-2
49100-32E60-019	420A-1-1
49100-32E60-30H	420A-1-2
50000	
51103-32E01	521A-1
51104-32E01	521A-23
51110-32E00	521A-9
	521A-31
51117-14201	521A-17
	521A-39
51121-40C00	521A-10
	521A-32
51130-32E00	521A-2
51132-32E00	521A-21
51140-32E00	521A-24
51147-16510	521A-19
	521A-41
51148-41310	521A-20
	521A-42
51153-14330	521A-6
	521A-28
51156-14200	521A-8
	521A-30
51158-14200	521A-5
	521A-27
51167-40C00	521A-4
	521A-26
51168-32E40	521A-22
51171-32E00	521A-14
	521A-36
51172-32E00	521A-15
	521A-37
51173-14330	521A-7
	521A-29
51176-32E00	521A-16
	521A-38
51177-14330	521A-12
	521A-34
51190-32E00	521A-11
	521A-33
51195-06C00	521A-3
	521A-25
51196-31D00	521A-13
	521A-35
51203-32E01	521A-43
51288-32E00	524A-18
51311-32E00	524A-7
51321-31D20	524A-17
51328-32E40	524A-19
51351-31D00	521A-18
	521A-40
51353-32E00	524A-8
51356-27C00	524A-9
51410-32E01	524A-1
51451-32E40	524A-6
51453-32E10	524A-5
51530-32E00	524A-20
51540-32E00	524A-21
51553-15D01	524A-22
51571-32E01	521A-46
51575-32E00	521A-47
51576-00B00	521A-45
51579-32E40	521A-44
51631-28E00	524A-4
51811-29F50-019	451A-1-1
51811-29F50-30H	451A-1-2
53111-13E00-019	451A-5-1
53111-13E00-30H	451A-5-2
54111-31D01	530A-1
54600-05D01	530A-7
54711-05D01	530A-5
54731-32E00	530A-2
54751-05D00	530A-6
55110-32E00	530A-10

PART NO.	FIG.NO.-REF.NO.
55200-32E01	530A-11
55261-32E01	530A-12
55311-44B00	530A-13
55320-31D00	530A-14
55412-41F00	530A-15-1
55413-41F00	530A-15-2
56110-32E00-291	462A-1
56200-29832	462A-2
56211-29320-291	524A-16
56221-14330-291	524A-10
56241-14A00	524A-12
56242-14200	524A-13
56272-10G20	462A-5
56273-10G10	462A-6
56321-28C00	524A-11
56500-06G30	462A-7
56600-06G30	462A-8
57100-14D00	468A-2
57110-12D11	468A-1
57211-12D00	469A-1
57341-05D10-019	468A-10-1
57341-05D10-30H	468A-10-2
57421-12E30	469A-3
57421-13001	468A-5
57431-05D00	468A-6
57433-09F00	468A-7
57441-45C00	469A-8
57442-45C00	469A-9
57460-14J02	468A-8
57465-17C00	468A-9
57500-12E30	469A-2
57531-12E30	469A-4
57532-12E30	469A-6
57533-12E30	469A-5
57541-31D20-019	469A-12-1
57541-31D20-30H	469A-12-2
57560-13E02	469A-11
58200-32E01	462A-9
58273-31001	462A-10
58300-32E00	462A-13
58410-32E00	462A-14
58621-07A20	537A-15
58634-32E00	462A-11
59121-01A00	535A-12
	555A-12
59122-46H00	535A-13
	555A-13
59146-21E10	535A-10
59220-32E00	530A-8
59300-13820	535A-3
59300-13830	535A-14
59300-13E01-999	535A-1
59300-27840	535A-2
59303-14500	535A-7
	555A-7
59305-27C00	535A-8
	555A-8
59315-13E00	535A-4
59315-27C10	555A-4
59345-13E00	535A-9
59350-13E00	535A-11
59382-14500	535A-6
59382-27C30	555A-6
59386-13A00	535A-5
	555A-5
59480-32E01	537A-14
59600-04810	537A-2
59600-31D50	537A-1
59666-44300	537A-3
59667-04700	537A-4
59668-14F00	537A-5
59669-14F10	537A-6
59671-36500	537A-8
59675-02FA0	537A-9
59748-15400	537A-10
59749-15400	537A-11
60000	
61000-32E30	541A-1
61128-29E00	541A-2
61196-27C30	558A-25
61251-14D00	541A-10
61262-28C11	541A-12
61273-13E01	541A-16
61282-32E00	541A-5
61311-01A03	541A-19
61340-15E00	541A-21
61348-15E00	541A-22
61410-32E00	550A-16
61431-13E10	541A-4
62100-32E21-019	543A-20
62162-28E01	543A-6
62317-27C10	543A-5
62600-32840	543A-1
62621-17C00	543A-18
62621-27C20	543A-11
62624-13E00	543A-14
62626-13E00	543A-9
62626-14D00	543A-16
62641-32E00	543A-15
62648-14500	543A-21
62658-01C60	543A-7
62682-13E00	543A-10
62684-40A10	543A-13
63112-32E00	474A-1
63113-32E20-019	474A-2-1
63113-32E20-30H	474A-2-2
63149-01C00	474A-11
63311-32E00	474A-4
63411-32E00	474A-5
63411-35B00	420A-5
64111-15D10	550A-1
64511-32E00	550A-12
64611-15D01	550A-17
64651-32E00	550A-18
64710-32E00	550A-7
64711-08D00	541A-13
64731-15D00	550A-2
64733-15D00	550A-19
64741-05D00	550A-8
64751-15D00	550A-9
65110-32E00	550A-24
65200-32E01	550A-25
65261-32E01	550A-26
65311-32E01	550A-22
65320-32E00	550A-23
68110-32EG0-B7R	420A-2-1
68110-32EG0-B7T	420A-2-2
68135-32E80-8YM	445A-5-2
68135-32E80-J7A	445A-5-1
68146-32E00	445A-6
68177-04A00-8YM	474A-12-2
68177-04A00-CT5	474A-12-1
68241-32E00	420A-4
68319-02K01	496A-1
68332-32E01	496A-2
68725-29FD0-B7S	451A-2-1
68725-29FD0-B7U	451A-2-2
69100-13810	555A-3
69100-32830	555A-14
69100-32E00-999	555A-1
69100-43830	555A-2
69113-43D00	555A-10

PART NO.	FIG.NO.-REF.NO.
69150-32E00	555A-9
69171-14D00	555A-15
69211-32E01	550A-5
69345-43D00	555A-11
69480-32E02	558A-22
69600-04820	558A-2
69600-32E00	558A-1
69667-00B20	558A-15
69668-00B20	558A-16
69669-03D00	558A-17
69670-27A30	558A-5
69672-00B20	558A-7
69674-00B20	558A-9
69686-34200	558A-8
69689-49300	537A-7
69691-00A00	558A-3
69692-13E00	558A-4
69693-05A00	558A-6
69730-32E00	558A-20
69740-03D00	558A-14
69743-14D10	558A-19
90000	
95700-41821	416A-5
99011-32E75-01A	496A-3
00000	
01421-0620A	107A-2
01500-0616A	201A-24
01500-0620A	212A-30
01500-0816A	206A-14
01547-0616A	170A-18
	178A-8
01547-0620A	112A-27
01547-0620B	469A-10
01547-0625A	112A-8
01547-0630A	112A-7
01547-0635A	112A-6
	112A-21
	112A-25
01547-0640A	108A-3
01547-0645A	112A-5
01547-0660A	108A-2
01547-0680A	108A-4
01550-0610B	401A-30
01550-0612A	155A-23
	330A-11
	350A-25
	462A-17
01550-0616A	541A-23
	558A-18
01550-0616B	474A-10
01550-0620A	103A-23
01550-0625A	103A-8
	420A-11
01550-0630A	103A-9
01550-0812A	505A-5
01550-0816A	416A-4
01550-0820A	178A-11
	401A-10
02112-0508A	120A-12
02112-0516B	330A-13
02112-0520B	468A-4
02112-0525B	468A-3
02112-0545B	355A-4
02112-0612A	108A-9
	108A-16
02112-0616B	350A-22
02112-0620A	339A-13
02112-0625A	170A-6
02112-7516A	130A-41
02122-0650A	541A-24
02122-0660B	462A-3
02142-0510A	558A-26
02142-0510B	468A-11
02142-0512A	155A-7
02142-0610A	312A-12
02142-0612A	451A-3
	541A-17
02142-0616A	445A-7
02142-0616B	330A-17
02142-0620A	155A-13
	339A-25
	537A-16
02142-0625A	312A-10
02162-0510B	178A-13
02162-0608A	312A-6
02162-0616B	401A-13
02162-0620C	312A-17
	312A-20
03211-0412A	339A-3
03211-0412B	339A-4
03511-1435B	330A-24
04111-2015A	558A-13
04111-2020A	415A-6
04111-3025A	407A-9
04211-09149	112A-4
	112A-14
	112A-24
04211-13189	103A-7
	107A-5
04221-04069	212A-21
06111-07004	415A-19
07120-0835A	163A-14
07130-0510A	303A-3
07130-0616A	178A-7
07130-0625A	127A-8
07130-0630A	303A-5
07130-0825A	163A-3
	416A-3
08123-6003B	530A-3
08123-6204B	550A-3
08123-6205B	550A-20
08150-62007	201A-20
08211-06141	212A-18
08211-08201	401A-17
08211-10221	122A-5
08211-14321	543A-17
08211-17341	541A-11
08211-38582	124A-7
08212-12201	212A-26
08310-0006A	339A-27
08310-0006B	330A-20
08313-1005B	333A-17
08313-1006B	469A-13
08316-1006A	107A-3
	505A-4
08316-1008A	103A-16
08316-1010A	334A-9
	334A-16
08319-2106A	468A-14
	469A-17
08319-2106B	469A-7
08319-2118A	550A-11
08319-3106A	312A-18
08319-3108A	103A-30
	401A-5
	401A-8
	550A-15
08319-3110A	524A-15
08319-3112A	543A-8
08319-3114A	543A-12
	543A-19
08321-0105B	333A-18
08322-0108B	550A-14
08322-0116A	541A-14
08331-31109	170A-5
08331-3112A	170A-9
	212A-27
08331-31383	124A-10
08331-41289	112A-29
08332-1106B	415A-17
08361-3506A	301A-10
09100-06166	126A-5
09103-06102	103A-4
09103-06167	103A-11
09103-06285	170A-12
09103-08139	401A-4
09103-08178	401A-14
09103-08332	103A-29
09103-08338	535A-15
09103-08339	401A-7
09103-10110	108A-17
09103-10178	103A-12
09103-10179	103A-14
09103-10180	103A-15
09103-10232	415A-8
09103-10237	108A-18
09103-10239	108A-19
09103-14001	303A-4
09106-05023	212A-32
09106-06075	108A-7
09106-08106	122A-8
09106-08155	530A-9
	550A-6
09106-08161	415A-13
09106-08193	163A-15
09108-08142	103A-10
09111-06039	206A-35
09111-06054	212A-17
09111-10047	407A-4
09113-06001	474A-6
09116-06006	401A-22
09116-06096	541A-20
09116-06167	330A-15
	333A-13
	401A-24
09116-06168	201A-18
09116-06170	451A-6
09116-06210	420A-8
09116-06213	401A-27
09116-06214	420A-15
09116-08120	178A-2
09120-08010	550A-13
09125-05066	355A-2
09126-05009	541A-3
09126-06011	212A-13
	212A-15
09126-06014	103A-27
09128-06006	421A-3
09128-06013	312A-4
09139-06024	474A-9
09139-06029	330A-26
09139-06067	558A-10
09139-06078	163A-12
	163A-20
09139-06089	416A-6
09139-06091	163A-5
09139-08016	350A-16
09140-04006	339A-21
09140-20001	201A-5
09140-20013	120A-15
09159-06043	401A-2
09159-06076	330A-9
09159-10097	407A-5
09159-10115	108A-22
09159-16007	541A-15
09160-05017	468A-12
09160-06019	469A-15
09160-06082	163A-6
	163A-11
09160-06088	339A-11
09160-06109	330A-18
09160-06130	468A-13
09160-06131	462A-4
09160-06154	469A-14
09160-08090	558A-12
09160-08135	163A-18
09160-10035	524A-14
09160-10124	415A-9
09160-15049	407A-8
09160-19022	550A-10
09160-22032	201A-2
09160-22068	201A-8
09160-37006	120A-5
09161-10009	537A-13
	558A-24
09164-00003	201A-14
09164-12018	126A-15
09164-20002	201A-6
09164-20003	120A-16
09164-38003	124A-6
09167-25012	206A-7
09167-25013	206A-25
09167-25016	206A-26
09168-06023	103A-13
	112A-9
09168-06026	421A-4
09168-06122	163A-7
09168-08008	127A-5
09168-10007	117A-5
09168-10017	103A-17
09168-12017	117A-3
09168-14002	103A-19
	108A-11
	108A-13
	112A-17
09169-06028	445A-8
09169-06032	451A-4
09169-06053	330A-19
	474A-8
09169-06055	469A-16
09169-06057	541A-18
09169-06065	401A-25
09169-06073	339A-23
	451A-7
	474A-7
09169-20005	201A-7
09169-25001	206A-24
09180-04024	330A-27
09180-06038	401A-28
09180-06251	330A-28
09180-06267	339A-10
09180-06271	420A-17
09180-06310	333A-14
09180-08151	163A-16
09180-08193	178A-3
09180-08215	401A-16
09181-10186	170A-4
09181-20195	206A-18
09181-25167	206A-8
09200-08048	558A-11
09200-10013	415A-5
09202-04017	124A-9

PART NO.	FIG.NO.-REF.NO.
09202-12002	122A-4
09206-08001	103A-3
09208-08011	415A-16
09209-05011	212A-33
09241-25007	103A-24
09247-14026	108A-14
09248-14011	103A-18
	108A-12
	112A-16
09250-12006	524A-25
09250-20012	401A-11
09259-20019	112A-10
09259-36016-20H	112A-18
09261-04009	170A-3
09261-05003	212A-10
09261-05005	126A-3
09262-12001	112A-28
09262-17046	206A-11
09262-20059	206A-29
09262-20121	124A-3
09262-22028	206A-10
09262-22029	124A-2
09262-25125	206A-30
09262-40008	120A-8
09262-45011	120A-9
09263-12024	201A-25
09263-17027	543A-2
09263-20071	541A-6
09263-20121	543A-4
09263-21012	543A-3
09263-22017	541A-7
09263-31009	122A-7
09263-37004-0C0	120A-4
09265-30035	524A-2
	524A-3
09280-04004	108A-10
09280-12012	178A-9
09280-15007	101A-10
	170A-14
09280-17003	101A-11
	112A-11
09280-33004	112A-19
09280-46002	101A-12
	103A-26
09280-72001	101A-13
	170A-16
09282-16002	120A-10
09283-20031	541A-8
09283-25108	206A-31
09283-26019	550A-4
09283-34003	550A-21
09284-23001	530A-4
09285-10004	201A-22
	212A-25
09285-22006	541A-9
09289-05015	126A-22
09300-20032	206A-17
09301-25002	206A-20
09319-10033	415A-10
09320-08021	401A-26
09320-09016	339A-9
	339A-24
09320-09018	333A-15
09320-10071	420A-18
09320-12043	163A-17
09320-14022	420A-16
09321-06030	339A-26
09321-10019	445A-9
09329-02002	339A-12
09343-07518	421A-5
09355-45855-600	130A-38
09360-10062	537A-12
	558A-23
09360-10066	117A-4
09360-12008	117A-2
09380-25003	206A-9
	206A-21
09381-10004	103A-2
09381-23003	120A-21
09390-22002	126A-6
09401-10409	421A-6
09401-12404	558A-21
09401-14101	155A-17
09401-14301	155A-11
	155A-22
09401-16401	155A-21
09402-58208	103A-28
09402-64203	155A-9
09403-09328	462A-12
09404-06030	155A-24
09404-06429	350A-5
09404-08422	350A-4
09407-03401	350A-6
09407-10404	350A-13
09407-11401	350A-7
09407-11402	350A-11
09407-12402	350A-12
09407-14403	350A-8
09407-18402	350A-9
09407-25401	350A-10
	462A-16
09407-25402	420A-14
09408-00066	462A-15
09420-04008	124A-11
09420-05007	120A-17
	303A-6
09440-04003	212A-11
09440-04010	212A-34
09440-05005	415A-18
09440-09031	124A-8
09440-13041	421A-7
09440-20016	201A-17
09440-21006	170A-17
09443-06016	350A-20
09443-08020	212A-19
09443-11030	407A-7
09443-12045	407A-2
09443-19010	407A-3
09444-26023	212A-23
09448-15004	415A-7
09471-12045	334A-6
	334A-15
09471-12083	339A-8
09471-12108	330A-6
09471-12118	330A-23
09471-12140	339A-20
09471-12185	333A-11
09481-10101	350A-18
09481-30101	312A-3
09482-00458	103A-20-3
09482-00459	103A-20-4
09482-00460	103A-20-1
09482-00461	103A-20-2
09491-28010	130A-14
09492-42010	130A-25
09493-20007	130A-6
09494-00884	130A-12
09800-21084	401A-18
09816-00100	401A-19

PART NO.	FIG.NO.-REF.NO.	PART NO.	FIG.NO.-REF.NO.	PART NO.	FIG.NO.-REF.NO.

SUZUKI **DR650SEM1** PARTS CATALOGUE

SUZUKI MOTOR CORPORATION All rights reserved
No part of this document may be reproduced or transmitted in any form or by any means, electronic or mechanical, for any purpose, without the express written permission of Suzuki Motor Corporation.

SUZUKI MOTOR CORPORATION
Technical Readiness Group, Quality Administration Department
300 Takatsuka, Minami, Hamamatsu, Japan

Copyright ©SUZUKI MOTOR CORPORATION 2020 All Rights Reserved

SUZUKI MOTOR CORPORATION

PRINTED IN JAPAN

9900B-31720-000